Order No: PAPAMY2307068CE

# Service Manual

## Air-to-Water Heatpump

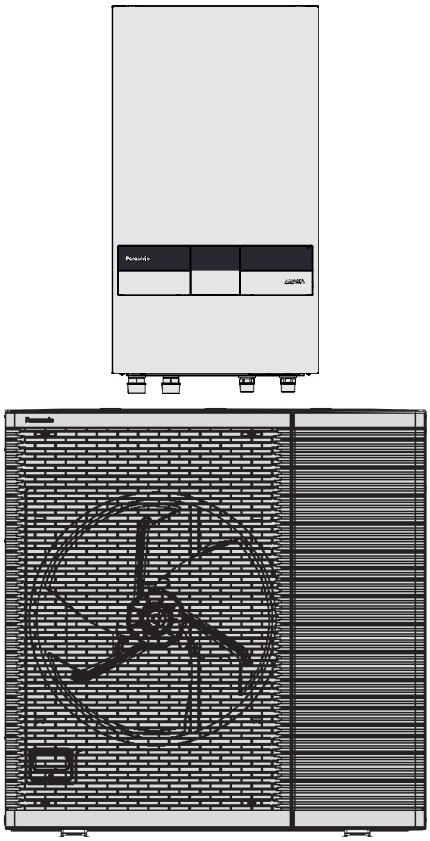

**Indoor Unit**
**WH-SDC0509L3E5**
**WH-SDC0509L6E5**

**Outdoor Unit**
**WH-WDG05LE5**
**WH-WDG07LE5**
**WH-WDG09LE5**

**Destination**
**Europe**

**⚠ WARNING**

This service information is designed for experienced repair technicians only and is not designed for use by the general public. It does not contain warnings or cautions to advise non-technical individuals of potential dangers in attempting to service a product. Products powered by electricity should be serviced or repaired only by experienced professional technicians. Any attempt to service or repair the products dealt with in this service information by anyone else could result in serious injury or death.

**IMPORTANT SAFETY NOTICE**

There are special components used in this equipment which are important for safety. These parts are marked by ⚠ in the Schematic Diagrams, Circuit Board Diagrams, Exploded Views and Replacement Parts List. It is essential that these critical parts should be replaced with manufacturer's specified parts to prevent shock, fire or other hazards. Do not modify the original design without permission of manufacturer.

**⚠ PRECAUTION OF LOW TEMPERATURE**

In order to avoid frostbite, be assured of no refrigerant leakage during the installation or repairing of refrigerant circuit.

**⚠ CAUTION**

**R290**
**REFRIGERANT**

This AIR-TO-WATER HEATPUMP contains and operates with refrigerant R290.
THIS PRODUCT MUST ONLY BE INSTALLED OR SERVICED BY QUALIFIED PERSONNEL
Refer to National, State, Territory and local legislation, regulations, codes, installation & operation manuals, before the installation, maintenance and/or service of this product.

Panasonic®

© Panasonic Corporation 2023.

# TABLE OF CONTENTS


**1. Safety Precautions .....4**

**2. Precaution For Using R290 Refrigerant .....7**

2.1 Protective Zone .....12

**3. Specifications .....13**

3.1 WH-SDC0509L3E5 WH-WDG05LE5 .....13
3.2 WH-SDC0509L3E5 WH-WDG07LE5 .....16
3.3 WH-SDC0509L3E5 WH-WDG09LE5 .....19
3.4 WH-SDC0509L6E5 WH-WDG05LE5 .....22
3.5 WH-SDC0509L6E5 WH-WDG07LE5 .....25
3.6 WH-SDC0509L6E5 WH-WDG09LE5 .....28

**4. Features.....31**

**5. Location of Controls and Components.....32**

5.1 Indoor Unit .....32
5.2 Outdoor Unit.....64

**6. Dimensions .....65**

6.1 Indoor Unit .....65
6.2 Outdoor Unit.....66

**7. Refrigeration and Water Cycle Diagram .....67**

**8. Block Diagram .....68**

8.1 WH-SDC0509L3E5.....68
8.2 WH-SDC0509L6E5.....69

**9. Wiring Connection Diagram .....70**

9.1 Indoor Unit .....70
9.2 Outdoor Unit.....72

**10. Electronic Circuit Diagram .....73**

10.1 Indoor Unit .....73
10.2 Outdoor Unit.....75

**11. Printed Circuit Board .....76**

11.1 Indoor Unit .....76
11.2 Outdoor Unit.....78

**12. Installation Instruction.....79**

12.1 Indoor Unit .....80
12.2 Outdoor Unit.....90
12.3 Appendix .....96
12.4 Service and Maintenance .....124

**13. Installation and Servicing Air-to-Water using R290 .....126**

13.1 About R290 Refrigerant .....126
13.2 Characteristics of R290 Refrigerant.....126
13.3 Refrigerant piping installation • Tools used in services .....128
13.4 New installation, and Repairing of Refrigerant Cycle System Procedures .....132
13.5 Servicing .....133

**14. Operation and Control .....135**

14.1 Basic Function .....135
14.2 Water Pump .....145
14.3 Indoor Unit Safety .....149
14.4 Auto Restart Control .....149
14.5 Indication Panel ..... 149
14.6 Indoor Back-Up Heater Control ..... 150
14.7 Tank Heater Control..... 151
14.8 Base Pan Heater Control (Optional)..... 152
14.9 Force Heater Mode ..... 152
14.10 Powerful Operation ..... 154
14.11 Quiet Operation..... 154
14.12 Sterilization Mode ..... 155
14.13 Outdoor Ambient Thermo OFF Control .... 155
14.14 Alternative Outdoor Ambient Sensor Control .. ..... 156
14.15 Force DHW mode ..... 156
14.16 SMART DHW mode..... 157
14.17 Anti Freeze Control ..... 157
14.18 Solar Operation (Optional)..... 158
14.19 Boiler Bivalent Control ..... 160
14.20 External Room Thermostat Control (Optional) ..... 162
14.21 Three Ways Valve Control..... 163
14.22 Two Ways Valve Control..... 163
14.23 External OFF/ON Control ..... 164
14.24 External Compressor Switch (Optional PCB) .. ..... 165
14.25 Heat/Cool Switch (Optional PCB)..... 165
14.26 SG Ready Control (Optional PCB) ..... 166
14.27 Demand Control (Optional PCB) ..... 167
14.28 Holiday Mode ..... 168
14.29 Dry Concrete..... 168
14.30 Flow Sensor ..... 168

**15. Protection Control ..... 169**

15.1 Protection Control for All Operations ..... 169
15.2 Protection Control for Heating Operation..... ..... 171
15.3 Protection Control for Cooling Operation..... ..... 172

**16. Servicing Mode ..... 173**

16.1 How to Take Out Front Plate ..... 173
16.2 Test Run ..... 173
16.3 Expansion Vessel ⑪ Pre Pressure Checking. ..... 174
16.4 Pump Down Procedures ..... 175
16.5 How To Unlock Cool Mode ..... 176
16.6 EEPROM Factory Default Data Setup Procedure ..... 177
16.7 Dry Concrete Setup ..... 178

**17. Maintenance Guide..... 180**

17.1 Maintenance for Magnetic Water Filter Set ..... ..... 182

**18. Troubleshooting Guide ..... 185**

18.1 Refrigeration Cycle System ..... 185
18.2 Relationship between the Condition of the Air-to-Water Heatpump Indoor and Outdoor Units and Pressure and Electric Current..... 186
18.3 Breakdown Self Diagnosis Function ..... 187
18.4 Error Codes Table..... 189
18.5 Self-diagnosis Method ..... 191

**19. Disassembly and Assembly Instructions ....243**

19.1 Indoor Unit .....243
19.2 Outdoor Unit .....249

**20. Technical Data .....253**

20.1 Operation Characteristics .....253
20.2 Heating Capacity Table .....265
20.3 Cooling Capacity Table .....267

**21. Exploded View and Replacement Parts List ..... .....268**

21.1 Indoor Unit .....268
21.2 Outdoor Unit .....272

- Specifications, designs and contents in this Service Manual are subject to change without notice.

# 1. Safety Precautions

- Read the following “SAFETY PRECAUTIONS” carefully before installation.
- Electrical works and water installation works must be done by licensed electrician and licensed water system installer respectively. Be sure to use the correct rating and main circuit for the model to be installed.
- The caution items stated here must be followed because these important contents are related to safety. The meaning of each indication used is as below. Incorrect installation due to ignoring of the instructions will cause harm or damage, and the seriousness is classified by the following indications.
- Please leave this installation manual with the unit after installation.

| | |
|---|---|
| ⚠ **WARNING** | This indication shows the possibility of causing death or serious injury. |
| ⚠ **CAUTION** | This indication shows the possibility of causing injury or damage to properties only. |

The items to be followed are classified by the symbols:

| | |
|---|---|
| ⃠ | Symbol with white background denotes item that is PROHIBITED. |
| ❗ ⏚ | Symbol with dark background denotes item that must be carried out. |

- Carry out test run to confirm that no abnormality occurs after the installation. Then, explain to user the operation, care and maintenance as stated in instructions. Please remind the customer to keep the operating instructions for future reference.
- This appliance is not intended for accessibility by the general public.
- If there is any doubt about the installation procedure or operation, always contact the authorized dealer for advice and information.

| ⚠ **WARNING** | |
|---|---|
| 1. Do not use means to accelerate the defrosting process or to clean, other than those recommended by the manufacturer. Any unfit method or using incompatible material may cause product damage, burst and serious injury. | ⃠ |
| 2. Do not install outdoor unit near handrail of veranda. When installing outdoor unit at veranda of high rise building, child may climb up to outdoor unit and cross over the handrail and causing accident. | ⃠ |
| 3. Do not use unspecified cord, modified cord, joint cord or extension cord for power supply cord. Do not share the single outlet with other electrical appliances. Poor contact, poor insulation or over current will cause electrical shock or fire. | ⃠ |
| 4. Do not tie up the power supply cord into a bundle by band. Abnormal temperature rise on power supply cord may happen. | ⃠ |
| 5. Do not insert your fingers or other objects into the unit, high speed rotating fan may cause injury. | ⃠ |
| 6. Do not sit or step on the unit, you may fall down accidentally. | ⃠ |
| 7. Keep plastic bag (packaging material) away from small children, it may cling to nose and mouth and prevent breathing. | ⃠ |
| 8. Do not purchase unauthorized electrical parts for installation, service, maintenance and etc.. They might cause electrical shock or fire. | ⃠ |
| 9. Do not modify the wiring of outdoor unit for installation of other components (i.e. heater, etc). Overloaded wiring or wire connection points may cause electrical shock or fire. | ⃠ |
| 10. Do not pierce or burn as the appliance is pressurized. Do not expose the appliance to heat, flame, sparks, or other sources of ignition. Else, it may explode and cause injury or death. | ⃠ |
| 11. Do not add or replace refrigerant other than specified type. It may cause product damage, burst and injury etc. | ⃠ |
| 12. Do not use joint cable for Indoor / Outdoor Unit connection cable. Use specified Indoor / Outdoor Unit connection cable, refer to instruction 5 **CONNECT THE CABLE TO THE INDOOR UNIT** and connect tightly for Indoor / Outdoor Unit connection. Clamp the cable so that no external force will be acted on the terminal. If connection or fixing is not perfect, it will cause heat up or fire at the connection. | ⃠ |
| 13. For electrical work, follow the national regulation, legislation and this installation instructions. An independent circuit and single outlet must be used. If electrical circuit capacity is not enough or defect found in the electrical work, it will cause electrical shock or fire. | ❗ |
| 14. For electrical work, follow local wiring standard, regulation and this installation instruction. An independent circuit and single outlet must be used. If electrical circuit capacity is not enough or defect found in electrical work, it will cause electrical shock or fire. | ❗ |
| 15. For water circuit installation work, follow to relevant European and national regulations (including EN61770) and local plumbing and building regulation codes. | ❗ |

| ⚠ WARNING | |
|---|---|
| 16. Engage authorized dealer or specialist for installation. If installation done by the user is incorrect, it will cause water leakage, electrical shock or fire. | |
| 17. Engage dealer or specialist for installation. If installation done by the user is defective, it will cause water leakage, electrical shock or fire. | |
| 18. • The refrigerant cycle is completed inside the outdoor unit.<br>• Refrigerant piping work is not required.<br>• Pump down operation is not also required. | |
| 19. Install at a strong and firm location which is able to withstand weight of the set. If the strength is not enough or installation is not properly done, the set will drop and cause injury. | |
| 20. This equipment is strongly recommended to be installed with Residual Current Device (RCD) on-site according to the respective national wiring rules or country–specific safety measures in terms of residual current. | |
| 21. For refrigeration system work, install according to this installation instructions strictly. If installation is defective, it will cause water leakage, electrical shock or fire. | |
| 22. Do not use joint cable for outdoor connection cable. Use specified outdoor connection cable, refer to instruction ⑥ **CONNECT THE CABLE TO THE OUTDOOR UNIT** and connect tightly for outdoor connection. Clamp the cable so that no external force will be acted on the terminal. If connection or fixing is not perfect, it will cause heat up or fire at the connection. | |
| 23. Wire routing must be properly arranged so that control board cover is fixed properly. If control board cover is not fixed perfectly, it will cause fire or electrical shock. | |
| 24. After completion of installation, confirm there is no leakage of refrigerant gas. It may lead to the risk of fire or explosion when the refrigerant contacts with fire. | |
| 25. Ventilate the room if there is refrigerant gas leakage during operation. Extinguish all fire sources if present. It may lead to the risk of fire or explosion when the refrigerant contacts with fire. | |
| 26. Use the attached accessories parts and specified parts for installation. Otherwise, it will cause the set to fall, water leakage, fire or electrical shock. | |
| 27. Only use the supplied or specified installation parts. Else, it may causes unit vibrate, fall, water leakage, electrical shock or fire. | |
| 28. If there is any doubt about the installation procedure or operation, always contact the authorized dealer for advice and information. | |
| 29. The unit is only for use in closed water system. Utilization in an open water circuit may lead to excessive corrosion of water piping and risk of incubating bacteria colonies, particularly Legionella, in water. | |
| 30. Select a location where in case of water leakage, the leakage will not cause damage to other properties. | |
| 31. When installing electrical equipment at wooden building of metal lath or wire lath, in accordance with electrical facility standard, no electrical contact between equipment and building is allowed. Insulator must be installed in between. | |
| 32. Any work carried out on the Indoor Unit after removing any panels which is secured by screws, must be carried out under the supervision of authorized dealer and licensed installation contractor. | |
| 33. Any work carried out on the outdoor unit after removing any panels which is secured by screws, must be carried out under the supervision of authorized dealer and licensed installation contractor. | |
| 34. This system is multi supply appliance. All circuits must be disconnected before accessing the unit terminals. | |
| 35. The piping installation work must be flushed before Indoor Unit is connected to remove contaminants. Contaminants may damage the Indoor Unit components. | |
| 36. This installation may be subjected to building regulation approval applicable to respective country that may require to notify the local authority before installation. | |
| 37. Be aware that refrigerants may not contain an odour. | |
| 38. This equipment must be properly earthed. Earth line must not be connected to gas pipe, water pipe, earth of lightning rod and telephone. Otherwise, it may cause electrical shock in case of equipment breakdown or insulation breakdown. | |
| 39. This unit must be properly earthed. The electrical earth must not be connected to a gas pipe, water pipe, the earth of lightening rod or a telephone. Otherwise there is a danger of electrical shock in the event of an insulation breakdown or electrical earth fault in the outdoor unit. | |

| ⚠ CAUTION | |
|---|---|
| 1. Do not install the Indoor Unit at place where leakage of flammable gas may occur. In case gas leaks and accumulates at surrounding of the unit, it may cause fire. | ⊘ |
| 2. Do not install the outdoor unit at place where leakage of flammable gas may occur. In case gas leaks and accumulates at surrounding of the unit, it may cause fire. | ⊘ |
| 3. Prevent liquid or vapor from entering sumps or sewers since vapor is heavier than air and may form suffocating atmospheres. | ⊘ |
| 4. Do not release refrigerant during repairing a refrigeration parts. Take care of the liquid refrigerant, it may cause frostbite. | ⊘ |
| 5. Do not install this appliance in a laundry room or other high humidity location. This condition will cause rust and damage to the unit. | ⊘ |
| 6. Make sure the insulation of power supply cord does not contact hot part (i.e. water piping) to prevent from insulation failure (melt). | ⊘ |
| 7. Do not touch the sharp aluminium fin, sharp parts may cause injury. | ⊘ |
| 8. Do not apply excessive force to water pipes that may damage the pipes. If water leakage occurs, it will cause flooding and damage to other properties. | ⊘ |
| 9. Carry out drainage piping as mentioned in installation instructions. If drainage is not perfect, water may enter the room and damage the furniture. | ! |
| 10. Select an installation location which is easy for maintenance.<br>Incorrect installation, service or repair of this Indoor Unit may increase the risk of rupture and this may result in loss damage or injury and/or property. | ! |
| 11. Select an installation location which is easy for maintenance.<br>Incorrect installation, service or repair of this outdoor unit may increase the risk of rupture and this may result in loss damage or injury and/or property. | ! |
| 12. Power supply connection to Indoor Unit.<br>• Power supply point should be in easily accessible place for power disconnection in case of emergency.<br>• Must follow local national wiring standard, regulation and this installation instruction.<br>• Strongly recommended to make permanent connection to a circuit breaker.<br>For Indoor Unit WH-SDC0509L3E5:<br>- Power Supply 1: Use approved 25A 2-poles circuit breaker with a minimum contact gap of 3.0mm.<br>- Power Supply 2: Use approved 15/16A 2-poles circuit breaker with a minimum contact gap of 3.0mm.<br>For Indoor Unit WH-SDC0509L6E5:<br>- Power Supply 1: Use approved 25A 2-poles circuit breaker with a minimum contact gap of 3.0mm.<br>- Power Supply 2: Use approved 30A 2-poles circuit breaker with a minimum contact gap of 3.0mm. | ! |
| 13. Ensure the correct polarity is maintained throughout all wiring. Otherwise, it will cause electrical shock or fire. | ! |
| 14. After installation, check the water leakage condition in connection area during test run. If leakage occurs, it will cause damage to other properties. | ! |
| 15. Installation work.<br>It may need three or more people to carry out the installation work. The weight of Indoor Unit might cause injury if carried by one person. | ! |
| 16. Installation work.<br>It may need two or more people to carry out the installation work. The weight of outdoor unit might cause injury if carried by one person. | ! |
| 17. Keep any required ventilation openings clear of obstruction. | ! |
| 18. Water piping in the occupied space shall be installed in such a way to protect against accidental damage in operation and service. | ! |
| 19. Precautions shall be taken to avoid excessive vibration or pulsation to water piping. | ! |
| 20. Protect the water piping from accidental rupture due to moving furniture or reconstruction activities. | ! |
| 21. • Must ensure the installation of water pipe-work shall be kept to a minimum. Avoid use dented pipe and do not allow acute bending.<br>• Must ensure that water pipe-work shall be protected from physical damage. | ! |

# 2. Precaution For Using R290 Refrigerant

- Pay careful attention to the following points:

| | WARNING | |
|---|---|---|
| 1. | The mixing of different refrigerants within a system is prohibited. | ! |
| 2. | Operation, maintenance, repairing and refrigerant recovery should be carried out by trained and certified personnel in the use of flammable refrigerants and as recommended by the manufacturer. Any personnel conducting an operation, servicing or maintenance on a system or associated parts of the equipment should be trained and certified. | ! |
| 3. | Any part of refrigerating circuit (evaporators, air coolers, AHU, condensers or liquid receivers) or piping should not be located in the proximity of heat sources, open flames, operating gas appliance or an operating electric heater. | ! |
| 4. | The user/owner or their authorized representative shall regularly check the alarms, mechanical ventilation and detectors, at least once a year, where as required by national regulations, to ensure their correct functioning. | ! |
| 5. | A logbook shall be maintained. The results of these checks shall be recorded in the logbook. | ! |
| 6. | In case of ventilations in occupied spaces shall be checked to confirm no obstruction. | ! |
| 7. | Before a new refrigerating system is put into service, the person responsible for placing the system in operation should ensure that trained and certified operating personnel are instructed on the basis of the instruction manual about the construction, supervision, operation and maintenance of the refrigerating system, as well as the safety measures to be observed, and the properties and handling of the refrigerant used. | ! |
| 8. | The general requirement of trained and certified personnel are indicated as below:<br>a) Knowledge of legislation, regulations and standards relating to flammable refrigerants; and,<br>b) Detailed knowledge of and skills in handling flammable refrigerants, personal protective equipment, refrigerant leakage prevention, handling of cylinders, charging, leak detection, recovery and disposal; and,<br>c) Able to understand and to apply in practice the requirements in the national legislation, regulations and Standards; and,<br>d) Continuously undergo regular and further training to maintain this expertise. | ! |
| 9. | Ensure protection devices, refrigerating circuit and fittings are well protected against adverse environmental effects (such as the danger of water collecting and freezing in relief pipes or the accumulation of dirt and debris). | ! |

**CAUTION**

1. Installation (Space)
   - Must comply with national gas regulations, state municipal rules and legislation. Notify relevant authorities in accordance with all applicable regulations.
   - Must ensure mechanical connections be accessible for maintenance purposes.
   - In cases that require mechanical ventilation, ventilation openings shall be kept clear of obstruction.
   - When disposal of the product, do follow to the precautions in #12 and comply with national regulations.
   - Always contact to local municipal offices for proper handling.

2. Servicing

   2-1. Service personnel
   - Any qualified person who is involved with working on or breaking into a refrigerant circuit should hold a current valid certificate from an industry-accredited assessment authority, which authorizes their competence to handle refrigerants safely in accordance with an industry recognized assessment specification.
   - Servicing shall only be performed as recommended by the equipment manufacturer. Maintenance and repair requiring the assistance of other skilled personnel shall be carried out under the supervision of the person competent in the use of flammable refrigerants.
   - Servicing shall be performed only as recommended by the manufacturer.
   - The system is inspected, regularly supervised and maintained by a trained and certified service personnel who is employed by the person user or party responsible.
   - Ensure refrigerant charge not to leak.

   2-2. Work
   - Prior to beginning work on systems containing flammable refrigerants, safety checks are necessary to ensure that the risk of ignition is minimised.
     For repair to the refrigerating system, the precautions in #2-2 to #2-8 must be followed before conducting work on the system.
   - Work shall be undertaken under a controlled procedure so as to minimize the risk of a flammable gas or vapour being present while the work is being performed.
   - All maintenance staff and others working in the local area shall be instructed and supervised on the nature of work being carried out.
   - Avoid working in confined spaces. Always ensure away from source, at least 2 meter of safety distance, or zoning of free space area of at least 2 meter in radius.
   - Wear appropriate protective equipment, including respiratory protection, as conditions warrant.
   - Keep all sources of ignition and hot metal surfaces away.

   2-3. Checking for presence of refrigerant
   - The area shall be checked with an appropriate refrigerant detector prior to and during work, to ensure the technician is aware of potentially flammable atmospheres.
   - Ensure that the leak detection equipment being used is suitable for use with flammable refrigerants, i.e. non sparking, adequately sealed or intrinsically safe.
   - In case of leakage/spillage happened, immediately ventilate area and stay upwind and away from spill/release.
   - In case of leakage/spillage happened, do notify persons down wind of the leaking/spill, isolate immediate hazard area and keep unauthorized personnel out.

   2-4. Presence of fire extinguisher
   - If any hot work is to be conducted on the refrigerating equipment or any associated parts, appropriate fire extinguishing equipment shall be available at hand.
   - Have a dry powder or $CO_2$ fire extinguisher adjacent to the charging area.

   2-5. No ignition sources
   - No person carrying out work in relation to a refrigerating system shall use any sources of ignition in such a manner that it may lead to the risk of fire or explosion. He/She must not be smoking when carrying out such work.
   - All possible ignition sources, including cigarette smoking, should be kept sufficiently far away from the site of installation, repairing, removing and disposal, during which flammable refrigerant can possibly be released to the surrounding space.
   - Prior to work taking place, the area around the equipment is to be surveyed to make sure that there are no flammable hazards or ignition risks.
   - “No Smoking” signs shall be displayed.

   2-6. Ventilated area
   - Ensure that the area is in the open or that it is adequately ventilated before breaking into the system or conducting any hot work.
   - A degree of ventilation shall continue during the period that the work is carried out.
   - The ventilation should safely disperse any released refrigerant and preferably expel it externally into the atmosphere.

| ⚠ CAUTION | |
|---|---|
| 2. | 2-7. Checks to the refrigerating equipment<br>• Where electrical components are being changed, they shall be fit for the purpose and to the correct specification.<br>• At all times the manufacturer's maintenance and service guidelines shall be followed.<br>• If in doubt consult the manufacturer's technical department for assistance.<br>• The following checks shall be applied to installations using flammable refrigerants.<br>- The ventilation machinery and outlets are operating adequately and are not obstructed.<br>- If an indirect refrigerating circuit is being used, the secondary circuit shall be checked for the presence of refrigerant.<br>- Marking to the equipment continues to be visible and legible. Markings and signs that are illegible shall be corrected.<br>- Refrigerating pipe or components are installed in a position where they are unlikely to be exposed to any substance which may corrode refrigerant containing components, unless the components are constructed of materials which are inherently resistant to being corroded or are properly protected against being so corroded.<br>2-8. Checks to electrical devices<br>• Repair and maintenance to electrical components shall include initial safety checks and component inspection procedures.<br>• Initial safety checks shall include but not limit to:-<br>- That capacitors are discharged: this shall be done in a safe manner to avoid possibility of sparking.<br>- That there are no live electrical components and wiring are exposed while charging, recovering or purging the system.<br>- That there is continuity of earth bonding.<br>• At all times the manufacturer's maintenance and service guidelines shall be followed.<br>• If in doubt consult the manufacturer's technical department for assistance.<br>• If a fault exists that could compromise safety, then no electrical supply shall be connected to the circuit until it is satisfactorily dealt with.<br>• If the fault cannot be corrected immediately but it is necessary to continue operation, an adequate temporary solution shall be used.<br>• The owner of the equipment must be informed or reported so all parties are advised thereinafter. | ❗ |
| 3. | Repairs to sealed components<br>• During repairs to sealed components, all electrical supplies shall be disconnected from the equipment being worked upon prior to any removal of sealed covers, etc.<br>• If it is absolutely necessary to have an electrical supply to equipment during servicing, then a permanently operating form of leak detection shall be located at the most critical point to warn of a potentially hazardous situation.<br>• Particular attention shall be paid to the following to ensure that by working on electrical components, the casing is not altered in such a way that the level of protection is affected. This shall include damage to cables, excessive number of connections, terminals not made to original specification, damage to seals, incorrect fitting of glands, etc.<br>• Ensure that apparatus is mounted securely.<br>• Ensure that seals or sealing materials have not degraded such that they no longer serve the purpose of preventing the ingress of flammable atmospheres.<br>• Replacement parts shall be in accordance with the manufacturer's specifications.<br><br>NOTE: The use of silicon sealant may inhibit the effectiveness of some types of leak detection equipment. Intrinsically safe components do not have to be isolated prior to working on them. | ❗ |
| 4. | Repair to intrinsically safe components<br>• Do not apply any permanent inductive or capacitance loads to the circuit without ensuring that this will not exceed the permissible voltage and current permitted for the equipment in use.<br>• Intrinsically safe components are the only types that can be worked on while live in the presence of a flammable atmosphere.<br>• The test apparatus shall be at the correct rating.<br>• Replace components only with parts specified by the manufacturer. Unspecified parts by manufacturer may result ignition of refrigerant in the atmosphere from a leak. | ❗ |
| 5. | Cabling<br>• Check that cabling will not be subject to wear, corrosion, excessive pressure, vibration, sharp edges or any other adverse environmental effects.<br>• The check shall also take into account the effects of aging or continual vibration from sources such as compressors or fans. | ❗ |
| 6. | Detection of flammable refrigerants<br>• Under no circumstances shall potential sources of ignition be used in the searching or detection of refrigerant leaks.<br>• A halide torch (or any other detector using a naked flame) shall not be used. | ❗ |

**CAUTION**

7. The following leak detection methods are deemed acceptable for all refrigerant systems.

- No leaks shall be detected when using detection equipment with a sensitivity of 5 grams per year of refrigerant or better under a pressure of at least 0,25 times the maximum allowable pressure (>0.98MPa, max 3.90MPa). For example, a universal sniffer.
- Electronic leak detectors may be used to detect flammable refrigerants, but the sensitivity may not be adequate, or may need re-calibration.
  (Detection equipment shall be calibrated in a refrigerant-free area.)
- Ensure that the detector is not a potential source of ignition and is suitable for the refrigerant used.
- Leak detection equipment shall be set at a percentage of the LFL of the refrigerant and shall be calibrated to the refrigerant employed and the appropriate percentage of gas (25 % maximum) is confirmed.
- Leak detection fluids are also suitable for use with most refrigerants, for example, bubble method and fluorescent method agents. The use of detergents containing chlorine shall be avoided as the chlorine may react with the refrigerant and corrode the copper pipe-work.
- If a leak is suspected, all ignition sources shall be removed/extinguished.
- If a leakage of refrigerant is found which requires brazing, all of the refrigerant shall be recovered from the system.
  The precautions in #8 must be followed to remove the refrigerant.

8. Removal and evacuation

- When breaking into the refrigerant circuit to make repairs – or for any other purpose – conventional procedures shall be used.
  However, it is important that best practice is followed since flammability is a consideration.
  The following procedure shall be adhered to:

| |
|---|
| • remove refrigerant -> • purge the circuit with inert gas -> • evacuate -> • purge with inert gas -> • open the circuit by cutting.<br>Brazing must not be used. |

- The refrigerant charge shall be recovered into the correct recovery cylinders.
- The system shall be purged with OFN to render the appliance safe. (remark: OFN = oxygen free nitrogen, type of inert gas)
- This process may need to be repeated several times.
- Compressed air or oxygen shall not be used for this task.
- Purging shall be achieved by breaking the vacuum in the system with OFN and continuing to fill until the working pressure is achieved, then venting to atmosphere, and finally pulling down to a vacuum.
- This process shall be repeated until no refrigerant is within the system. (Until the concentration of purge gas is 0.25 LFL or less by the leak detector). ※0.25LFL = 0.525Vol%
- When the final OFN charge is used, the system shall be vented down to atmospheric pressure to enable work to take place.
- This operation is absolutely vital if brazing operations on the pipe work are to take place.
- Ensure that the outlet for the vacuum pump is not close to any potential ignition sources and there is ventilation available.

9. Charging procedures

- In addition to conventional charging procedures, the following requirements shall be followed.
  - Ensure that contamination of different refrigerants does not occur when using charging equipment.
  - Hoses or lines shall be as short as possible to minimize the amount of refrigerant contained in them.
  - Cylinders shall be kept in an appropriate position according to the instructions.
  - Ensure that the refrigerating system is earthed prior to charging the system with refrigerant.
  - Label the system when charging is complete (if not already).
  - Extreme care shall be taken not to over fill the refrigerating system.
- Prior to recharging the system it shall be pressure tested with OFN (refer to #8).
- The system shall be leak tested on completion of charging but prior to commissioning.
- A follow up leak test shall be carried out prior to leaving the site.
- Electrostatic charge may accumulate and create a hazardous condition when charging and discharging the refrigerant.
  To avoid fire or explosion, dissipate static electricity during transfer by grounding and bonding containers and equipment before charging/discharging.

**CAUTION**

10.

Decommissioning

- Before carrying out this procedure, it is essential that the technician is completely familiar with the equipment and all its details.
- It is recommended good practice that all refrigerants are recovered safely.
- Re-use of recovered refrigerant is prohibited.
- It is essential that electrical power is available before the task is commenced.
  a) Become familiar with the equipment and its operation.
  b) Isolate system electrically.
  c) Before attempting the procedure ensure that:

  • mechanical handling equipment is available, if required, for handling refrigerant cylinders;
  • all personal protective equipment and leak detectors are available and being used correctly;
  • the recovery process is supervised at all times by a competent person;
  • recovery equipment and cylinders conform to the appropriate standards.

  d) Make sure that cylinder is situated on the scales before recovery takes place.
  e) Start the recovery machine and operate in accordance with instructions.
  f) Do not over fill cylinders. (No more than 80 % volume liquid charge).
  g) Do not exceed the maximum working pressure of the cylinder, even temporarily.
  h) When the cylinders have been filled correctly and the process completed, make sure that the cylinders and the equipment are removed from site promptly and all isolation valves on the equipment are closed off.
- Electrostatic charge may accumulate and create a hazardous condition when charging or discharging the refrigerant. To avoid fire or explosion, dissipate static electricity during transfer by grounding and bonding containers and equipment before charging/discharging.

11.

Labelling

- Equipment shall be labelled stating that it has been de-commissioned and emptied of refrigerant.
- The label shall be dated and signed.
- Ensure that there are labels on the equipment stating the equipment contains flammable refrigerant.

12.

Recovery

- When removing refrigerant from a system, either for servicing or decommissioning, it is recommended good practice that all refrigerants are removed safely.
- When transferring refrigerant into cylinders, ensure that only appropriate refrigerant recovery cylinders are employed.
- Ensure that the correct number of cylinders for holding the total system charge are available.
- All cylinders to be used are designated for the recovered refrigerant and labelled for that refrigerant (i.e. special cylinders for the recovery of refrigerant).
- Cylinders shall be complete with pressure relief valve and associated shut-off valves in good working order.
- Recovery cylinders are evacuated and, if possible, cooled before recovery occurs.
- The recovery equipment shall be in good working order with a set of instructions concerning the equipment that is at hand and shall be suitable for the recovery of flammable refrigerants.
- Make sure the recovery equipment is not a potential ignition source and is suitable for the refrigerant you are using.
- In addition, a set of calibrated weighing scales shall be available and in good working order.
- Hoses shall be complete with leak-free disconnect couplings and in good condition.
- Before using the recovery machine, check that it is in satisfactory working order, has been properly maintained and that any associated electrical components are sealed to prevent ignition in the event of a refrigerant release. Consult manufacturer if in doubt.
- The recovered refrigerant shall be returned to the refrigerant supplier in the correct recovery cylinder, and the relevant Waste Transfer Note arranged.
- Do not mix refrigerants in recovery units and especially not in cylinders.
- If compressors or compressor oils are to be removed, ensure that they have been evacuated to an acceptable level to make certain that flammable refrigerant does not remain within the lubricant.
- The evacuation process shall be carried out prior to returning the compressor to the suppliers.
- Only electric heating to the compressor body shall be employed to accelerate this process.
- When oil is drained from a system, it shall be carried out safely.

## 2.1 Protective Zone

This outdoor unit is filled with R290 (Extremely flammable gas, safety A3 group per ISO 817). Note that this refrigerant has a higher density than air. In case of a refrigerant leak, the leaked refrigerant may accumulate near the ground.

Prevent accumulation of refrigerant in any way that is potentially dangerous, explosive or risk suffocation. Prevent refrigerant from entering the building through building openings. Prevent accumulation of refrigerant in the drain grooves.

A protective zone is defined around this outdoor unit. There must be no building openings, windows, doors, light shafts, cellar entrances, escape hatches, flat-roof windows or ventilation openings in the protective zone.

There must be no ignition sources, such as heat above 360 ºC, sparks, open flame, plug sockets, light switches, lamps, electrical switches or other permanent ignitions sources, in the protective zone.

The protective zone must not extend to adjacent buildings or public traffic areas (boundaries of neighbors, the public road, neighbor's private roads, subsidence area, depressions, pump shafts, sewers intakes, waste water shafts and so on.).

In the protective zone, you are not permitted to make any subsequent structural alterations which infringe the stated rules for the protective zone.

1) Protective zone for ground installation (or flat-roof installation) at the open areas

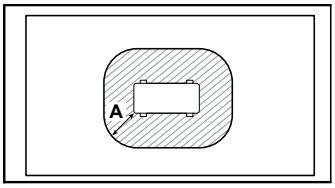


A 1000 mm

2) Protective zone for ground installation in front of a building wall

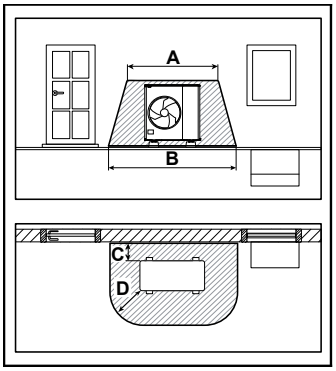


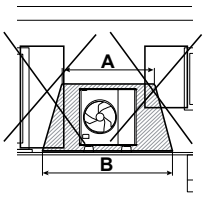


A 2000 mm
B 3000 mm
C 300 mm
D 1000 mm

3) Protective zone for ground installation in a building corner

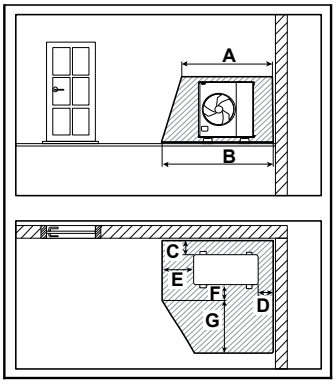


A 2000 mm
B 2500 mm
C 300 mm
D 500 mm
E 1000 mm
F 500 mm
G 1800 mm

4) Protective zone for wall installation in front of a building wall

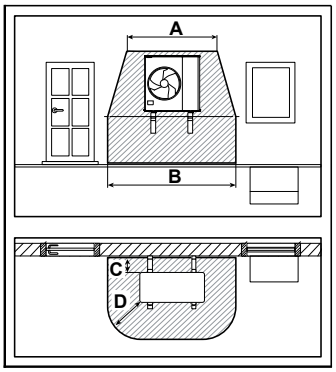


A 2000 mm
B 3000 mm
C 300 mm
D 1000 mm

The protective zone under the product extends to the floor.

5) Protective zone for wall installation in a building corner

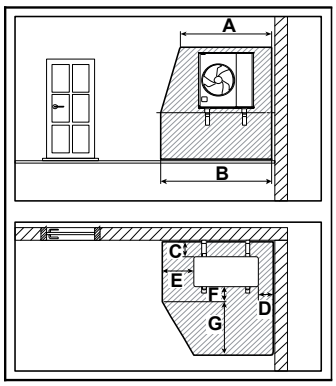


A 2000 mm
B 2500 mm
C 300 mm
D 500 mm
E 1000 mm
F 500 mm
G 1800 mm

The protective zone under the product extends to the floor.

# 3. Specifications

## *3.1 WH-SDC0509L3E5 WH-WDG05LE5*

| Item | | Unit | Outdoor Unit | | |
|---|---|---|---|---|---|
| Performance Test Condition | | | EN 14511 / EN 14825 | | |
| Cooling Capacity | | Condition (Ambient/Water) | A35W7 | | |
| | | kW | 5.00 | | |
| | | BTU/h | 17100 | | |
| | | kcal/h | 4300 | | |
| Cooling EER | | W/W | 3.23 | | |
| | | kcal/hW | 2.77 | | |
| Heating Capacity | | Condition (Ambient/Water) | A7W35 | A2W35 | |
| | | kW | 5.00 | 5.00 | |
| | | BTU/h | 17100 | 17100 | |
| | | kcal/h | 4300 | 4300 | |
| Heating COP | | W/W | 5.05 | 3.52 | |
| | | kcal/hW | 4.34 | 3.03 | |
| Heating ErP | Low Temperature Application (W35) | | Warmer | Average | Colder |
| | Application | Climate | | | |
| | Pdesign | kW | 5.0 | 5.0 | 6.0 |
| | Tbivalent / TOL | °C | 2 / 2 | -10 / -10 | -15 / -22 |
| | SCOP / ns | (W/W) / % | 6.00 / 237 | 5.06 / 200 | 4.25 / 167 |
| | Annual Consumption | kWh | 1113 | 2040 | 3483 |
| | Class | | A+++ | A+++ | A++ |
| | Medium Temperature Application (W55) | | Warmer | Average | Colder |
| | Application | Climate | | | |
| | Pdesign | kW | 5.0 | 5.0 | 6.0 |
| | Tbivalent / TOL | °C | 2 / 2 | -10 / -10 | -15 / -22 |
| | SCOP / ns | (W/W) / % | 4.27 / 168 | 3.63 / 142 | 3.28 / 128 |
| | Annual Consumption | kWh | 1565 | 2849 | 4516 |
| | Class | | A+++ | A++ | A++ |
| Noise Level | | Condition (Ambient/Water) | A35W7 | A7W35 | A2W35 |
| | | dB (A) *** | Cooling: - | Heating: - | Heating: - |
| | | Power Level dB *** | Cooling: 61 | Heating: 57 | Heating: 57 |
| | | dB **** | - | Heating: 52 | Heating: 52 |
| Air Flow | | $m^3$/min ($ft^3$/min) | Cooling: 55.0 (1942)<br>Heating: 45.0 (1589) | | |
| Refrigeration Control Device | | | Expansion Valve | | |
| Refrigeration Oil | | $cm^3$ | PZ68S (1100) | | |
| Refrigerant (R290) Precharge / Maximum | | kg (oz) | 0.96 (33.9) / (-) | | |
| F-GAS | GWP | | 3 | | |
| | $CO^2$eq (ton) (Precharged / Maximum) | | 0.003 / (-) | | |
| Dimension | Height | mm (inch) | 996 (39-7/32) | | |
| | Width | mm (inch) | 980 (38-19/32) | | |
| | Depth | mm (inch) | 430 (16-15/16) | | |
| Net Weight | | kg (lbs) | 98 (216) | | |

| Item | | | Unit | Outdoor Unit | | |
|---|---|---|---|---|---|---|
| Water Piping between O/D & I/D | Pipe Diameter (Inner) | | mm | 20 | | |
| | Standard Length | | m (ft) | 5.0 / 16.4 | | |
| | Maximum Pipe Length | | m (ft) | 30.0 (98.4) | | |
| | I/D & O/D Height Difference | | m (ft) | 10.0 (32.8) | | |
| | Water Pipe Connector | Indoor | mm (inch) | 1 | | |
| | | Outdoor | mm (inch) | 1 | | |
| Compressor | Type | | | Hermetic Motor Compressor (Rotary) | | |
| | Motor Type | | | Synchronous Electric Motor (4-poles) | | |
| | Rated Output | | kW | 1.70 | | |
| Fan | Type | | | Propeller Fan | | |
| | Material | | | PP | | |
| | Motor Type | | | DC (8-poles) | | |
| | Input Power | | W | - | | |
| | Output Power | | W | 120 | | |
| | Fan Speed | | rpm | Cooling: 520<br>Heating: 440 | | |
| Heat Exchanger | Fin material | | | Aluminium (Pre Coat) | | |
| | Fin Type | | | Corrugated Fin | | |
| | Row × Stage × FPI | | | 2 × 46 × 19 | | |
| | Size (W × H × L) | | mm | 36.38 × 966 × 880.6 : 908.6 | | |
| Hot Water Coil | Type | | | Braze Plate | | |
| | No. of Plates | | | 26 | | |
| | Size (W × H × L) | | mm | 57.8 × 524 × 117 | | |
| | Water Flow Rate | | l/min ($m^3$/h) | Cooling: 14.3 (0.9)<br>Heating: 14.3 (0.9) | | |
| Power Source (Phase, Voltage, Cycle) | | | Ø | Single | | |
| | | | V | 230 | | |
| | | | Hz | 50 | | |
| Input Power | | | Condition (Ambient/Water) | A35W7 | A7W35 | A2W35 |
| | | | kW | Cooling: 1.55 | Heating: 0.99 | Heating: 1.42 |
| Maximum Input Power For Heatpump System | | | kW | 2.93 | | |
| Power Supply 1 : Phase (Ø) / Max. Current (A) / Max. Input Power (W) | | | | 1Ø / 13.0 / 2.93k | | |
| Power Supply 2 : Phase (Ø) / Max. Current (A) / Max. Input Power (W) | | | | 1Ø / 13.0 / 3.00k | | |
| Power Supply 3 : Phase (Ø) / Max. Current (A) / Max. Input Power (W) | | | | - / - / - | | |
| Starting Current | | | A | 6.9 | | |
| Running Current | | | Condition (Ambient/Water) | A35W7 | A7W35 | A2W35 |
| | | | A | Cooling: 6.9 | Heating: 4.4 | Heating: 6.3 |
| Maximum Current For Heatpump System | | | A | 13.0 | | |
| Power Factor<br>Power factor means total figure of compressor and outdoor fan motor. | | | % | Cooling: 98 | Heating: 98 | Heating: 98 |
| Power Cord | Number of core | | | - | | |
| | Length | | m (ft) | - | | |
| Thermostat | | | | Electronic Control | | |
| Protection Device | | | | Electronic Control | | |
| Pressure Relief Valve Water Circuit | | | kPa | Open: 300, Close: 210 and below | | |

| Item | | Unit | Indoor Unit | | |
|---|---|---|---|---|---|
| Performance Test Condition | | | EN 14511 / EN 14825 | | |
| Operation Range | Outdoor Ambient | °C (min. / max.) | Cooling: 10 / 43<br>Heating (Circuit): -25 / 35 | | |
| | Water Outlet | °C (min. / max.) | Cooling: 5 / 20<br>Heating (Circuit): 20 / 55 (Below Ambient -20 °C) *3<br>Heating (Circuit): 20 / 75 (Above Ambient -10 °C) *3 | | |
| Internal Pressure Differential | | kPa | Cooling: 18.0<br>Heating: 18.0 | | |
| Noise Level | | Condition (Ambient/Water) | A35W7 | A7W35 | A2W35 |
| | | dB (A) | Cooling: 28*** | Heating: 28*** | Heating: 28*** |
| | | Power Level dB | Cooling: 41*** | Heating: 41*** | Heating: 41*** |
| Dimension | Depth | mm (inch) | 348 (13-23/32) | | |
| | Width | mm (inch) | 500 (19-11/16) | | |
| | Height | mm (inch) | 892 (35-1/8) | | |
| Net Weight | | kg (lbs) | 33 (73) | | |
| Water Pipe Diameter | Room | mm (inch) | 31 (1-1/4) | | |
| | Shower | mm (inch) | - | | |
| Water Drain Hose Inner Diameter | | mm (inch) | 15 (9/16) | | |
| Pump | Motor Type | | Brushless DC Motor (Sensorless vector control system) | | |
| | No. of Speed | | 7 (Software Selection) | | |
| | Input Power | W | 145 | | |
| Flow Sensor | Type | | Vortex (Piezoelectric sensor) | | |
| | Measuring range | l/min | 5 ~ 60 | | |
| Pressure Release Valve | | kPa | Open: 800, Close: 640 and below | | |
| Protection Device | | A | Earth Leakage Circuit Breaker (30 ~ 40) | | |
| Expansion Vessel | Volume | l | 10 | | |
| | MWP | bar | 3 | | |
| Capacity of Integrated Electric Heater / OLP TEMP | | kW / °C | 3.00 / 85 | | |

**Note:**

- In case it is necessary to indicate the air flow volume in (l/s), the value in ($m^3$/min.) shall be multiplied by 16.7 and rounded down the decimal point.
- If the EUROVENT Certified models can be operated under the “extra-low” temperature condition, -7°C DB and -8°C WB temperature with rated voltage 230V shall be used.
- Capacity is measured at outdoor temperature 7°C DB and 6°C WB with controlled water inlet 30°C and water outlet 35°C (EN 14511-2)
- Flowrate indicated are based on nominal capacity adjustment of leaving water temperature (LWT) 35°C and ΔT=5°C.
- *** The sound pressure level is measured with distance 1.0m from the unit and height at 1.5m. (Test carry out for cooling at ambient 35°C DB and Water Out 7°C, heating at ambient 7°C DB / 6°C WB and water out 55°C)
- **** The sound power level is measured with accordance to EN12102 under conditions of the EN14825.
- EER and COP classification is at 230V only in occordance with EU directive 2003/32/EC.
- **** The sound power level is measured with accordance to EN12102 under full load conditions. (Test carry out for cooling at ambient 35°C DB and Water Out 7°C, heating at ambient 7°C DB / 6°C WB and water out 55°C)

## 3.2 WH-SDC0509L3E5 WH-WDG07LE5

| Item | | Unit | Outdoor Unit | | |
|---|---|---|---|---|---|
| Performance Test Condition | | | EN 14511 / EN 14825 | | |
| Cooling Capacity | | Condition (Ambient/Water) | A35W7 | | |
| | | kW | 7.00 | | |
| | | BTU/h | 23900 | | |
| | | kcal/h | 6020 | | |
| Cooling EER | | W/W | 3.03 | | |
| | | kcal/hW | 2.61 | | |
| Heating Capacity | | Condition (Ambient/Water) | A7W35 | A2W35 | |
| | | kW | 7.00 | 6.85 | |
| | | BTU/h | 23900 | 23400 | |
| | | kcal/h | 6020 | 5890 | |
| Heating COP | | W/W | 4.93 | 3.43 | |
| | | kcal/hW | 4.24 | 2.95 | |
| Heating ErP | Low Temperature Application (W35) | | Warmer | Average | Colder |
| | Application | Climate | | | |
| | Pdesign | kW | 7.0 | 7.0 | 7.0 |
| | Tbivalent / TOL | °C | 2 / 2 | -10 / -10 | -17 / -22 |
| | SCOP / ns | (W/W) / % | 6.31 / 249 | 4.96 / 195 | 4.25 / 167 |
| | Annual Consumption | kWh | 1483 | 2916 | 4060 |
| | Class | | A+++ | A+++ | A++ |
| | Medium Temperature Application (W55) | | Warmer | Average | Colder |
| | Application | Climate | | | |
| | Pdesign | kW | 6.0 | 7.0 | 7.0 |
| | Tbivalent / TOL | °C | 2 / 2 | -7 / -10 | -15 / -22 |
| | SCOP / ns | (W/W) / % | 4.52 / 178 | 3.62 / 142 | 3.29 / 129 |
| | Annual Consumption | kWh | 1775 | 3991 | 5241 |
| | Class | | A+++ | A++ | A++ |
| Noise Level | | Condition (Ambient/Water) | A35W7 | A7W35 | A2W35 |
| | | dB (A) *** | Cooling: - | Heating: - | Heating: - |
| | | Power Level dB *** | Cooling: 63 | Heating: 60 | Heating: 60 |
| | | dB **** | - | Heating: 53 | Heating: 53 |
| Air Flow | | $m^3$/min ($ft^3$/min) | Cooling: 57.0 (2013)<br>Heating: 51.0 (1801) | | |
| Refrigeration Control Device | | | Expansion Valve | | |
| Refrigeration Oil | | $cm^3$ | PZ68S (1100) | | |
| Refrigerant (R290) Precharge / Maximum | | kg (oz) | 0.96 (33.9) / (-) | | |
| F-GAS | GWP | | 3 | | |
| | $CO^2$eq (ton) (Precharged / Maximum) | | 0.003 / (-) | | |
| Dimension | Height | mm (inch) | 996 (39-7/32) | | |
| | Width | mm (inch) | 980 (38-19/32) | | |
| | Depth | mm (inch) | 430 (16-15/16) | | |
| Net Weight | | kg (lbs) | 98 (216) | | |

| Item | | | Unit | Outdoor Unit | | |
|---|---|---|---|---|---|---|
| Water Piping between O/D & I/D | Pipe Diameter (Inner) | | mm | 25 | | |
| | Standard Length | | m (ft) | 5.0 / 16.4 | | |
| | Maximum Pipe Length | | m (ft) | 30.0 (98.4) | | |
| | I/D & O/D Height Difference | | m (ft) | 10.0 (32.8) | | |
| | Water Pipe Connector | Indoor | mm (inch) | 1 | | |
| | | Outdoor | mm (inch) | 1 | | |
| Compressor | Type | | | Hermetic Motor Compressor (Rotary) | | |
| | Motor Type | | | Synchronous Electric Motor (4-poles) | | |
| | Rated Output | | kW | 1.70 | | |
| Fan | Type | | | Propeller Fan | | |
| | Material | | | PP | | |
| | Motor Type | | | DC (8-poles) | | |
| | Input Power | | W | - | | |
| | Output Power | | W | 120 | | |
| | Fan Speed | | rpm | Cooling: 540<br>Heating: 490 | | |
| Heat Exchanger | Fin material | | | Aluminium (Pre Coat) | | |
| | Fin Type | | | Corrugated Fin | | |
| | Row × Stage × FPI | | | 2 × 36 × 19 | | |
| | Size (W × H × L) | | mm | 36.38 × 966 × 880.6 : 908.6 | | |
| Hot Water Coil | Type | | | Braze Plate | | |
| | No. of Plates | | | 26 | | |
| | Size (W × H × L) | | mm | 57.8 × 524 × 117 | | |
| | Water Flow Rate | | l/min ($m^3$/h) | Cooling: 20.1 (1.2)<br>Heating: 20.1 (1.2) | | |
| Power Source (Phase, Voltage, Cycle) | | | Ø | Single | | |
| | | | V | 230 | | |
| | | | Hz | 50 | | |
| Input Power | | | Condition (Ambient/Water) | A35W7 | A7W35 | A2W35 |
| | | | kW | Cooling: 2.31 | Heating: 1.42 | Heating: 2.00 |
| Maximum Input Power For Heatpump System | | | kW | 3.56 | | |
| Power Supply 1 : Phase (Ø) / Max. Current (A) / Max. Input Power (W) | | | | 1Ø / 15.8 / 3.56k | | |
| Power Supply 2 : Phase (Ø) / Max. Current (A) / Max. Input Power (W) | | | | 1Ø / 13.0 / 3.00k | | |
| Power Supply 3 : Phase (Ø) / Max. Current (A) / Max. Input Power (W) | | | | - / - / - | | |
| Starting Current | | | A | 10.2 | | |
| Running Current | | | Condition (Ambient/Water) | A35W7 | A7W35 | A2W35 |
| | | | A | Cooling: 10.2 | Heating: 6.3 | Heating: 8.9 |
| Maximum Current For Heatpump System | | | A | 15.8 | | |
| Power Factor<br>Power factor means total figure of compressor and outdoor fan motor. | | | % | Cooling: 98 | Heating: 98 | Heating: 98 |
| Power Cord | Number of core | | | - | | |
| | Length | | m (ft) | - | | |
| Thermostat | | | | Electronic Control | | |
| Protection Device | | | | Electronic Control | | |
| Pressure Relief Valve Water Circuit | | | kPa | Open: 300, Close: 210 and below | | |

| Item | | Unit | Indoor Unit | | |
|---|---|---|---|---|---|
| Performance Test Condition | | | EN 14511 / EN 14825 | | |
| Operation Range | Outdoor Ambient | °C (min. / max.) | Cooling: 10 / 43<br>Heating (Circuit): -25 / 35 | | |
| | Water Outlet | °C (min. / max.) | Cooling: 5 / 20<br>Heating (Circuit): 20 / 55 (Below Ambient -20 °C) *3<br>Heating (Circuit): 20 / 75 (Above Ambient -10 °C) *3 | | |
| Internal Pressure Differential | | kPa | Cooling: 25.0<br>Heating: 25.0 | | |
| Noise Level | | Condition (Ambient/Water) | A35W7 | A7W35 | A2W35 |
| | | dB (A) | Cooling: 30*** | Heating: 30*** | Heating: 30*** |
| | | Power Level dB | Cooling: 43*** | Heating: 43*** | Heating: 43*** |
| Dimension | Depth | mm (inch) | 348 (13-23/32) | | |
| | Width | mm (inch) | 500 (19-11/16) | | |
| | Height | mm (inch) | 892 (35-1/8) | | |
| Net Weight | | kg (lbs) | 33 (73) | | |
| Water Pipe Diameter | Room | mm (inch) | 31 (1-1/4) | | |
| | Shower | mm (inch) | - | | |
| Water Drain Hose Inner Diameter | | mm (inch) | 15 (9/16) | | |
| Pump | Motor Type | | Brushless DC Motor (Sensorless vector control system) | | |
| | No. of Speed | | 7 (Software Selection) | | |
| | Input Power | W | 145 | | |
| Flow Sensor | Type | | Vortex (Piezoelectric sensor) | | |
| | Measuring range | l/min | 5 ~ 60 | | |
| Pressure Release Valve | | kPa | Open: 800, Close: 640 and below | | |
| Protection Device | | A | Earth Leakage Circuit Breaker (30 ~ 40) | | |
| Expansion Vessel | Volume | l | 10 | | |
| | MWP | bar | 3 | | |
| Capacity of Integrated Electric Heater / OLP TEMP | | kW / °C | 3.00 / 85 | | |

**Note:**

- In case it is necessary to indicate the air flow volume in (l/s), the value in ($m^3$/min.) shall be multiplied by 16.7 and rounded down the decimal point.
- If the EUROVENT Certified models can be operated under the “extra-low” temperature condition, -7°C DB and -8°C WB temperature with rated voltage 230V shall be used.
- Capacity is measured at outdoor temperature 7°C DB and 6°C WB with controlled water inlet 30°C and water outlet 35°C (EN 14511-2)
- Flowrate indicated are based on nominal capacity adjustment of leaving water temperature (LWT) 35°C and ΔT=5°C.
- *** The sound pressure level is measured with distance 1.0m from the unit and height at 1.5m. (Test carry out for cooling at ambient 35°C DB and Water Out 7°C, heating at ambient 7°C DB / 6°C WB and water out 55°C)
- **** The sound power level is measured with accordance to EN12102 under conditions of the EN14825.
- EER and COP classification is at 230V only in occordance with EU directive 2003/32/EC.
- **** The sound power level is measured with accordance to EN12102 under full load conditions. (Test carry out for cooling at ambient 35°C DB and Water Out 7°C, heating at ambient 7°C DB / 6°C WB and water out 55°C)

## 3.3 WH-SDC0509L3E5 WH-WDG09LE5

| Item | | Unit | Outdoor Unit | | |
|---|---|---|---|---|---|
| Performance Test Condition | | | EN 14511 / EN 14825 | | |
| Cooling Capacity | | Condition (Ambient/Water) | A35W7 | | |
| | | kW | 8.20 | | |
| | | BTU/h | 28000 | | |
| | | kcal/h | 7050 | | |
| Cooling EER | | W/W | 2.82 | | |
| | | kcal/hW | 2.42 | | |
| Heating Capacity | | Condition (Ambient/Water) | A7W35 | A2W35 | |
| | | kW | 9.00 | 7.00 | |
| | | BTU/h | 30700 | 23900 | |
| | | kcal/h | 7740 | 6020 | |
| Heating COP | | W/W | 4.55 | 3.41 | |
| | | kcal/hW | 3.91 | 2.94 | |
| Heating ErP | Low Temperature Application (W35) | | Warmer | Average | Colder |
| | Application | Climate | | | |
| | Pdesign | kW | 7.0 | 8.0 | 9.0 |
| | Tbivalent / TOL | °C | 2 / 2 | -10 / -10 | -15 / -22 |
| | SCOP / ns | (W/W) / % | 6.44 / 255 | 4.84 / 190 | 4.31 / 170 |
| | Annual Consumption | kWh | 1453 | 3417 | 5142 |
| | Class | | A+++ | A+++ | A++ |
| | Medium Temperature Application (W55) | | Warmer | Average | Colder |
| | Application | Climate | | | |
| | Pdesign | kW | 7.0 | 8.0 | 8.0 |
| | Tbivalent / TOL | °C | 2 / 2 | -7 / -10 | -15 / -22 |
| | SCOP / ns | (W/W) / % | 4.50 / 177 | 3.67 / 144 | 3.33 / 130 |
| | Annual Consumption | kWh | 2080 | 4499 | 5915 |
| | Class | | A+++ | A++ | A++ |
| Noise Level | | Condition (Ambient/Water) | A35W7 | A7W35 | A2W35 |
| | | dB (A) *** | Cooling: - | Heating: - | Heating: - |
| | | Power Level dB *** | Cooling: 63 | Heating: 63 | Heating: 63 |
| | | dB **** | - | Heating: 54 | Heating: 54 |
| Air Flow | | $m^3$/min ($ft^3$/min) | Cooling: 61.0 (2154)<br>Heating: 74.0 (2613) | | |
| Refrigeration Control Device | | | Expansion Valve | | |
| Refrigeration Oil | | $cm^3$ | PZ68S (1100) | | |
| Refrigerant (R290) Precharge / Maximum | | kg (oz) | 1.00 (35.3) / (-) | | |
| F-GAS | GWP | | 3 | | |
| | $CO^2$eq (ton) (Precharged / Maximum) | | 0.003 / (-) | | |
| Dimension | Height | mm (inch) | 996 (39-7/32) | | |
| | Width | mm (inch) | 980 (38-19/32) | | |
| | Depth | mm (inch) | 430 (16-15/16) | | |
| Net Weight | | kg (lbs) | 97 (214) | | |

| Item | | | Unit | Outdoor Unit | | |
|---|---|---|---|---|---|---|
| Water Piping between O/D & I/D | Pipe Diameter (Inner) | | mm | 25 | | |
| | Standard Length | | m (ft) | 5.0 / 16.4 | | |
| | Maximum Pipe Length | | m (ft) | 30.0 (98.4) | | |
| | I/D & O/D Height Difference | | m (ft) | 10.0 (32.8) | | |
| | Water Pipe Connector | Indoor | mm (inch) | 1 | | |
| | | Outdoor | mm (inch) | 1 | | |
| Compressor | Type | | | Hermetic Motor Compressor (Rotary) | | |
| | Motor Type | | | Synchronous Electric Motor (4-poles) | | |
| | Rated Output | | kW | 1.70 | | |
| Fan | Type | | | Propeller Fan | | |
| | Material | | | PP | | |
| | Motor Type | | | DC (8-poles) | | |
| | Input Power | | W | - | | |
| | Output Power | | W | 120 | | |
| | Fan Speed | | rpm | Cooling: 570<br>Heating: 560 | | |
| Heat Exchanger | Fin material | | | Aluminium (Pre Coat) | | |
| | Fin Type | | | Corrugated Fin | | |
| | Row × Stage × FPI | | | 2 × 46 × 19 | | |
| | Size (W × H × L) | | mm | 36.38 × 966 × 880.6 : 908.6 | | |
| Hot Water Coil | Type | | | Braze Plate | | |
| | No. of Plates | | | 26 | | |
| | Size (W × H × L) | | mm | 57.8 × 524 × 117 | | |
| | Water Flow Rate | | l/min ($m^3$/h) | Cooling: 23.5 (1.4)<br>Heating: 25.8 (1.5) | | |
| Power Source (Phase, Voltage, Cycle) | | | Ø | Single | | |
| | | | V | 230 | | |
| | | | Hz | 50 | | |
| Input Power | | | Condition (Ambient/Water) | A35W7 | A7W35 | A2W35 |
| | | | kW | Cooling: 2.91 | Heating: 1.98 | Heating: 2.05 |
| Maximum Input Power For Heatpump System | | | kW | 3.56 | | |
| Power Supply 1 : Phase (Ø) / Max. Current (A) / Max. Input Power (W) | | | | 1Ø / 15.8 / 3.56k | | |
| Power Supply 2 : Phase (Ø) / Max. Current (A) / Max. Input Power (W) | | | | 1Ø / 13.0 / 3.00k | | |
| Power Supply 3 : Phase (Ø) / Max. Current (A) / Max. Input Power (W) | | | | - / - / - | | |
| Starting Current | | | A | 12.9 | | |
| Running Current | | | Condition (Ambient/Water) | A35W7 | A7W35 | A2W35 |
| | | | A | Cooling: 12.9 | Heating: 8.8 | Heating: 9.1 |
| Maximum Current For Heatpump System | | | A | 15.8 | | |
| Power Factor<br>Power factor means total figure of compressor and outdoor fan motor. | | | % | Cooling: 98 | Heating: 98 | Heating: 98 |
| Power Cord | Number of core | | | - | | |
| | Length | | m (ft) | - | | |
| Thermostat | | | | Electronic Control | | |
| Protection Device | | | | Electronic Control | | |
| Pressure Relief Valve Water Circuit | | | kPa | Open: 300, Close: 210 and below | | |

| Item | | Unit | Indoor Unit | | |
|---|---|---|---|---|---|
| Performance Test Condition | | | EN 14511 / EN 14825 | | |
| Operation Range | Outdoor Ambient | °C (min. / max.) | Cooling: 10 / 43<br>Heating (Circuit): -25 / 35 | | |
| | Water Outlet | °C (min. / max.) | Cooling: 5 / 20<br>Heating (Circuit): 20 / 55 (Below Ambient -20 °C) *3<br>Heating (Circuit): 20 / 75 (Above Ambient -10 °C) *3 | | |
| Internal Pressure Differential | | kPa | Cooling: 32.0<br>Heating: 36.0 | | |
| Noise Level | | Condition (Ambient/Water) | A35W7 | A7W35 | A2W35 |
| | | dB (A) | Cooling: 30*** | Heating: 30*** | Heating: 30*** |
| | | Power Level dB | Cooling: 43*** | Heating: 43*** | Heating: 43*** |
| Dimension | Depth | mm (inch) | 348 (13-23/32) | | |
| | Width | mm (inch) | 500 (19-11/16) | | |
| | Height | mm (inch) | 892 (35-1/8) | | |
| Net Weight | | kg (lbs) | 33 (73) | | |
| Water Pipe Diameter | Room | mm (inch) | 31 (1-1/4) | | |
| | Shower | mm (inch) | - | | |
| Water Drain Hose Inner Diameter | | mm (inch) | 15 (9/16) | | |
| Pump | Motor Type | | Brushless DC Motor (Sensorless vector control system) | | |
| | No. of Speed | | 7 (Software Selection) | | |
| | Input Power | W | 145 | | |
| Flow Sensor | Type | | Vortex (Piezoelectric sensor) | | |
| | Measuring range | l/min | 5 ~ 60 | | |
| Pressure Release Valve | | kPa | Open: 800, Close: 640 and below | | |
| Protection Device | | A | Earth Leakage Circuit Breaker (30 ~ 40) | | |
| Expansion Vessel | Volume | l | 10 | | |
| | MWP | bar | 3 | | |
| Capacity of Integrated Electric Heater / OLP TEMP | | kW / °C | 3.00 / 85 | | |

**Note:**

- In case it is necessary to indicate the air flow volume in (l/s), the value in ($m^3$/min.) shall be multiplied by 16.7 and rounded down the decimal point.
- If the EUROVENT Certified models can be operated under the “extra-low” temperature condition, -7°C DB and -8°C WB temperature with rated voltage 230V shall be used.
- Capacity is measured at outdoor temperature 7°C DB and 6°C WB with controlled water inlet 30°C and water outlet 35°C (EN 14511-2)
- Flowrate indicated are based on nominal capacity adjustment of leaving water temperature (LWT) 35°C and ΔT=5°C.
- *** The sound pressure level is measured with distance 1.0m from the unit and height at 1.5m. (Test carry out for cooling at ambient 35°C DB and Water Out 7°C, heating at ambient 7°C DB / 6°C WB and water out 55°C)
- **** The sound power level is measured with accordance to EN12102 under conditions of the EN14825.
- EER and COP classification is at 230V only in occordance with EU directive 2003/32/EC.
- **** The sound power level is measured with accordance to EN12102 under full load conditions. (Test carry out for cooling at ambient 35°C DB and Water Out 7°C, heating at ambient 7°C DB / 6°C WB and water out 55°C)

## 3.4 WH-SDC0509L6E5 WH-WDG05LE5

| Item | | Unit | Outdoor Unit | | |
|---|---|---|---|---|---|
| Performance Test Condition | | | EN 14511 / EN 14825 | | |
| Cooling Capacity | | Condition (Ambient/Water) | A35W7 | | |
| | | kW | 5.00 | | |
| | | BTU/h | 17100 | | |
| | | kcal/h | 4300 | | |
| Cooling EER | | W/W | 3.23 | | |
| | | kcal/hW | 2.77 | | |
| Heating Capacity | | Condition (Ambient/Water) | A7W35 | A2W35 | |
| | | kW | 5.00 | 5.00 | |
| | | BTU/h | 17100 | 17100 | |
| | | kcal/h | 4300 | 4300 | |
| Heating COP | | W/W | 5.05 | 3.52 | |
| | | kcal/hW | 4.34 | 3.03 | |
| Heating ErP | Low Temperature Application (W35) | | Warmer | Average | Colder |
| | Application | Climate | | | |
| | Pdesign | kW | 5.0 | 5.0 | 6.0 |
| | Tbivalent / TOL | °C | 2 / 2 | -10 / -10 | -15 / -22 |
| | SCOP / ns | (W/W) / % | 6.00 / 237 | 5.06 / 200 | 4.25 / 167 |
| | Annual Consumption | kWh | 1113 | 2040 | 3483 |
| | Class | | A+++ | A+++ | A++ |
| | Medium Temperature Application (W55) | | Warmer | Average | Colder |
| | Application | Climate | | | |
| | Pdesign | kW | 5.0 | 5.0 | 6.0 |
| | Tbivalent / TOL | °C | 2 / 2 | -10 / -10 | -15 / -22 |
| | SCOP / ns | (W/W) / % | 4.27 / 168 | 3.63 / 142 | 3.28 / 128 |
| | Annual Consumption | kWh | 1565 | 2849 | 4516 |
| | Class | | A+++ | A++ | A++ |
| Noise Level | | Condition (Ambient/Water) | A35W7 | A7W35 | A2W35 |
| | | dB (A) *** | Cooling: - | Heating: - | Heating: - |
| | | Power Level dB *** | Cooling: 61 | Heating: 57 | Heating: 57 |
| | | dB **** | - | Heating: 52 | Heating: 52 |
| Air Flow | | $m^3$/min ($ft^3$/min) | Cooling: 55.0 (1942)<br>Heating: 45.0 (1589) | | |
| Refrigeration Control Device | | | Expansion Valve | | |
| Refrigeration Oil | | $cm^3$ | PZ68S (1100) | | |
| Refrigerant (R290) Precharge / Maximum | | kg (oz) | 0.96 (33.9) / (-) | | |
| F-GAS | GWP | | 3 | | |
| | $CO^2$eq (ton) (Precharged / Maximum) | | 0.003 / (-) | | |
| Dimension | Height | mm (inch) | 996 (39-7/32) | | |
| | Width | mm (inch) | 980 (38-19/32) | | |
| | Depth | mm (inch) | 430 (16-15/16) | | |
| Net Weight | | kg (lbs) | 98 (216) | | |

| Item | | | Unit | Outdoor Unit | | |
|---|---|---|---|---|---|---|
| Water Piping between O/D & I/D | Pipe Diameter (Inner) | | mm | 20 | | |
| | Standard Length | | m (ft) | 5.0 / 16.4 | | |
| | Maximum Pipe Length | | m (ft) | 30.0 (98.4) | | |
| | I/D & O/D Height Difference | | m (ft) | 10.0 (32.8) | | |
| | Water Pipe Connector | Indoor | mm (inch) | 1 | | |
| | | Outdoor | mm (inch) | 1 | | |
| Compressor | Type | | | Hermetic Motor Compressor (Rotary) | | |
| | Motor Type | | | Synchronous Electric Motor (4-poles) | | |
| | Rated Output | | kW | 1.70 | | |
| Fan | Type | | | Propeller Fan | | |
| | Material | | | PP | | |
| | Motor Type | | | DC (8-poles) | | |
| | Input Power | | W | - | | |
| | Output Power | | W | 120 | | |
| | Fan Speed | | rpm | Cooling: 520<br>Heating: 440 | | |
| Heat Exchanger | Fin material | | | Aluminium (Pre Coat) | | |
| | Fin Type | | | Corrugated Fin | | |
| | Row × Stage × FPI | | | 2 × 46 × 19 | | |
| | Size (W × H × L) | | mm | 36.38 × 966 × 880.6 : 908.6 | | |
| Hot Water Coil | Type | | | Brazed Plate | | |
| | No. of Plates | | | 26 | | |
| | Size (W × H × L) | | mm | 57.8 × 524 × 117 | | |
| | Water Flow Rate | | l/min ($m^3$/h) | Cooling: 14.3 (0.9)<br>Heating: 14.3 (0.9) | | |
| Power Source (Phase, Voltage, Cycle) | | | Ø | Single | | |
| | | | V | 230 | | |
| | | | Hz | 50 | | |
| Input Power | | | Condition (Ambient/Water) | A35W7 | A7W35 | A2W35 |
| | | | kW | Cooling: 1.55 | Heating: 0.99 | Heating: 1.42 |
| Maximum Input Power For Heatpump System | | | kW | 2.93 | | |
| Power Supply 1 : Phase (Ø) / Max. Current (A) / Max. Input Power (W) | | | | 1Ø / 13.0 / 2.93k | | |
| Power Supply 2 : Phase (Ø) / Max. Current (A) / Max. Input Power (W) | | | | 1Ø / 26.0 / 6.00k | | |
| Power Supply 3 : Phase (Ø) / Max. Current (A) / Max. Input Power (W) | | | | - / - / - | | |
| Starting Current | | | A | 6.9 | | |
| Running Current | | | Condition (Ambient/Water) | A35W7 | A7W35 | A2W35 |
| | | | A | Cooling: 6.9 | Heating: 4.4 | Heating: 6.3 |
| Maximum Current For Heatpump System | | | A | 13.0 | | |
| Power Factor<br>Power factor means total figure of compressor and outdoor fan motor. | | | % | Cooling: 98 | Heating: 98 | Heating: 98 |
| Power Cord | Number of core | | | - | | |
| | Length | | m (ft) | - | | |
| Thermostat | | | | Electronic Control | | |
| Protection Device | | | | Electronic Control | | |
| Pressure Relief Valve Water Circuit | | | kPa | Open: 300, Close: 210 and below | | |

| Item | | Unit | Indoor Unit | | |
|---|---|---|---|---|---|
| Performance Test Condition | | | EN 14511 / EN 14825 | | |
| Operation Range | Outdoor Ambient | °C (min. / max.) | Cooling: 10 / 43<br>Heating (Circuit): -25 / 35 | | |
| | Water Outlet | °C (min. / max.) | Cooling: 5 / 20<br>Heating (Circuit): 20 / 55 (Below Ambient -20 °C) *3<br>Heating (Circuit): 20 / 75 (Above Ambient -10 °C) *3 | | |
| Internal Pressure Differential | | kPa | Cooling: 18.0<br>Heating: 18.0 | | |
| Noise Level | | Condition (Ambient/Water) | A35W7 | A7W35 | A2W35 |
| | | dB (A) | Cooling: 28*** | Heating: 28*** | Heating: 28*** |
| | | Power Level dB | Cooling: 41*** | Heating: 41*** | Heating: 41*** |
| Dimension | Depth | mm (inch) | 348 (13-23/32) | | |
| | Width | mm (inch) | 500 (19-11/16) | | |
| | Height | mm (inch) | 892 (35-1/8) | | |
| Net Weight | | kg (lbs) | 34 (75) | | |
| Water Pipe Diameter | Room | mm (inch) | 31 (1-1/4) | | |
| | Shower | mm (inch) | - | | |
| Water Drain Hose Inner Diameter | | mm (inch) | 15 (9/16) | | |
| Pump | Motor Type | | Brushless DC Motor (Sensorless vector control system) | | |
| | No. of Speed | | 7 (Software Selection) | | |
| | Input Power | W | 145 | | |
| Flow Sensor | Type | | Vortex (Piezoelectric sensor) | | |
| | Measuring range | l/min | 5 ~ 60 | | |
| Pressure Release Valve | | kPa | Open: 800, Close: 640 and below | | |
| Protection Device | | A | Earth Leakage Circuit Breaker (30 ~ 40) | | |
| Expansion Vessel | Volume | l | 10 | | |
| | MWP | bar | 3 | | |
| Capacity of Integrated Electric Heater / OLP TEMP | | kW / °C | 6.00 / 85 | | |

**Note:**

- In case it is necessary to indicate the air flow volume in (l/s), the value in ($m^3$/min.) shall be multiplied by 16.7 and rounded down the decimal point.
- If the EUROVENT Certified models can be operated under the “extra-low” temperature condition, -7°C DB and -8°C WB temperature with rated voltage 230V shall be used.
- Capacity is measured at outdoor temperature 7°C DB and 6°C WB with controlled water inlet 30°C and water outlet 35°C (EN 14511-2)
- Flowrate indicated are based on nominal capacity adjustment of leaving water temperature (LWT) 35°C and ΔT=5°C.
- *** The sound pressure level is measured with distance 1.0m from the unit and height at 1.5m. (Test carry out for cooling at ambient 35°C DB and Water Out 7°C, heating at ambient 7°C DB / 6°C WB and water out 55°C)
- **** The sound power level is measured with accordance to EN12102 under conditions of the EN14825.
- EER and COP classification is at 230V only in occordance with EU directive 2003/32/EC.
- **** The sound power level is measured with accordance to EN12102 under full load conditions. (Test carry out for cooling at ambient 35°C DB and Water Out 7°C, heating at ambient 7°C DB / 6°C WB and water out 55°C)

## 3.5 WH-SDC0509L6E5 WH-WDG07LE5

| Item | | Unit | Outdoor Unit | | |
|---|---|---|---|---|---|
| Performance Test Condition | | | EN 14511 / EN 14825 | | |
| Cooling Capacity | | Condition (Ambient/Water) | A35W7 | | |
| | | kW | 7.00 | | |
| | | BTU/h | 23900 | | |
| | | kcal/h | 6020 | | |
| Cooling EER | | W/W | 3.03 | | |
| | | kcal/hW | 2.61 | | |
| Heating Capacity | | Condition (Ambient/Water) | A7W35 | A2W35 | |
| | | kW | 7.00 | 6.85 | |
| | | BTU/h | 23900 | 23400 | |
| | | kcal/h | 6020 | 5890 | |
| Heating COP | | W/W | 4.93 | 3.43 | |
| | | kcal/hW | 4.24 | 2.95 | |
| Heating ErP | Low Temperature Application (W35) | | Warmer | Average | Colder |
| | Application | Climate | | | |
| | Pdesign | kW | 7.0 | 7.0 | 7.0 |
| | Tbivalent / TOL | °C | 2 / 2 | -10 / -10 | -17 / -22 |
| | SCOP / ns | (W/W) / % | 6.31 / 249 | 4.96 / 195 | 4.25 / 167 |
| | Annual Consumption | kWh | 1483 | 2916 | 4060 |
| | Class | | A+++ | A+++ | A++ |
| | Medium Temperature Application (W55) | | Warmer | Average | Colder |
| | Application | Climate | | | |
| | Pdesign | kW | 6.0 | 7.0 | 7.0 |
| | Tbivalent / TOL | °C | 2 / 2 | -7 / -10 | -15 / -22 |
| | SCOP / ns | (W/W) / % | 4.52 / 178 | 3.62 / 142 | 3.29 / 129 |
| | Annual Consumption | kWh | 1775 | 3991 | 5241 |
| | Class | | A+++ | A++ | A++ |
| Noise Level | | Condition (Ambient/Water) | A35W7 | A7W35 | A2W35 |
| | | dB (A) *** | Cooling: - | Heating: - | Heating: - |
| | | Power Level dB *** | Cooling: 63 | Heating: 60 | Heating: 60 |
| | | dB **** | - | Heating: 53 | Heating: 53 |
| Air Flow | | $m^3$/min ($ft^3$/min) | Cooling: 57.0 (2013)<br>Heating: 51.0 (1801) | | |
| Refrigeration Control Device | | | Expansion Valve | | |
| Refrigeration Oil | | $cm^3$ | PZ68S (1100) | | |
| Refrigerant (R290) Precharge / Maximum | | kg (oz) | 0.96 (33.9) / (-) | | |
| F-GAS | GWP | | 3 | | |
| | $CO^2$eq (ton) (Precharged / Maximum) | | 0.003 / (-) | | |
| Dimension | Height | mm (inch) | 996 (39-7/32) | | |
| | Width | mm (inch) | 980 (38-19/32) | | |
| | Depth | mm (inch) | 430 (16-15/16) | | |
| Net Weight | | kg (lbs) | 98 (216) | | |

| Item | | | Unit | Outdoor Unit | | |
|---|---|---|---|---|---|---|
| Water Piping between O/D & I/D | Pipe Diameter (Inner) | | mm | 25 | | |
| | Standard Length | | m (ft) | 5.0 / 16.4 | | |
| | Maximum Pipe Length | | m (ft) | 30.0 (98.4) | | |
| | I/D & O/D Height Difference | | m (ft) | 10.0 (32.8) | | |
| | Water Pipe Connector | Indoor | mm (inch) | 1 | | |
| | | Outdoor | mm (inch) | 1 | | |
| Compressor | Type | | | Hermetic Motor Compressor (Rotary) | | |
| | Motor Type | | | Synchronous Electric Motor (4-poles) | | |
| | Rated Output | | kW | 1.70 | | |
| Fan | Type | | | Propeller Fan | | |
| | Material | | | PP | | |
| | Motor Type | | | DC (8-poles) | | |
| | Input Power | | W | - | | |
| | Output Power | | W | 120 | | |
| | Fan Speed | | rpm | Cooling: 540<br>Heating: 490 | | |
| Heat Exchanger | Fin material | | | Aluminium (Pre Coat) | | |
| | Fin Type | | | Corrugated Fin | | |
| | Row × Stage × FPI | | | 2 × 36 × 19 | | |
| | Size (W × H × L) | | mm | 36.38 × 756.0 × 868.8 : 897.0 | | |
| Hot Water Coil | Type | | | Brazed Plate | | |
| | No. of Plates | | | 26 | | |
| | Size (W × H × L) | | mm | 57.8 × 524 × 117 | | |
| | Water Flow Rate | | l/min ($m^3$/h) | Cooling: 20.1 (1.2)<br>Heating: 20.1 (1.2) | | |
| Power Source (Phase, Voltage, Cycle) | | | Ø | Single | | |
| | | | V | 230 | | |
| | | | Hz | 50 | | |
| Input Power | | | Condition (Ambient/Water) | A35W7 | A7W35 | A2W35 |
| | | | kW | Cooling: 2.31 | Heating: 1.42 | Heating: 2.00 |
| Maximum Input Power For Heatpump System | | | kW | 3.56 | | |
| Power Supply 1 : Phase (Ø) / Max. Current (A) / Max. Input Power (W) | | | | 1Ø / 15.8 / 3.56k | | |
| Power Supply 2 : Phase (Ø) / Max. Current (A) / Max. Input Power (W) | | | | 1Ø / 26.0 / 6.00k | | |
| Power Supply 3 : Phase (Ø) / Max. Current (A) / Max. Input Power (W) | | | | - / - / - | | |
| Starting Current | | | A | 10.2 | | |
| Running Current | | | Condition (Ambient/Water) | A35W7 | A7W35 | A2W35 |
| | | | A | Cooling: 10.2 | Heating: 6.3 | Heating: 8.9 |
| Maximum Current For Heatpump System | | | A | 15.8 | | |
| Power Factor<br>Power factor means total figure of compressor and outdoor fan motor. | | | % | Cooling: 98 | Heating: 98 | Heating: 98 |
| Power Cord | Number of core | | | - | | |
| | Length | | m (ft) | - | | |
| Thermostat | | | | Electronic Control | | |
| Protection Device | | | | Electronic Control | | |
| Pressure Relief Valve Water Circuit | | | kPa | Open: 300, Close: 210 and below | | |

| Item | | Unit | Indoor Unit | | |
|---|---|---|---|---|---|
| Performance Test Condition | | | EN 14511 / EN 14825 | | |
| Operation Range | Outdoor Ambient | °C (min. / max.) | Cooling: 10 / 43<br>Heating (Circuit): -25 / 35 | | |
| | Water Outlet | °C (min. / max.) | Cooling: 5 / 20<br>Heating (Circuit): 20 / 55 (Below Ambient -20 °C) *3<br>Heating (Circuit): 20 / 75 (Above Ambient -10 °C) *3 | | |
| Internal Pressure Differential | | kPa | Cooling: 25.0<br>Heating: 25.0 | | |
| Noise Level | | Condition (Ambient/Water) | A35W7 | A7W35 | A2W35 |
| | | dB (A) | Cooling: 30*** | Heating: 30*** | Heating: 30*** |
| | | Power Level dB | Cooling: 43*** | Heating: 43*** | Heating: 43*** |
| Dimension | Depth | mm (inch) | 348 (13-23/32) | | |
| | Width | mm (inch) | 500 (19-11/16) | | |
| | Height | mm (inch) | 892 (35-1/8) | | |
| Net Weight | | kg (lbs) | 34 (75) | | |
| Water Pipe Diameter | Room | mm (inch) | 31 (1-1/4) | | |
| | Shower | mm (inch) | - | | |
| Water Drain Hose Inner Diameter | | mm (inch) | 15 (9/16) | | |
| Pump | Motor Type | | Brushless DC Motor (Sensorless vector control system) | | |
| | No. of Speed | | 7 (Software Selection) | | |
| | Input Power | W | 145 | | |
| Flow Sensor | Type | | Vortex (Piezoelectric sensor) | | |
| | Measuring range | l/min | 5 ~ 60 | | |
| Pressure Release Valve | | kPa | Open: 800, Close: 640 and below | | |
| Protection Device | | A | Earth Leakage Circuit Breaker (30 ~ 40) | | |
| Expansion Vessel | Volume | l | 10 | | |
| | MWP | bar | 3 | | |
| Capacity of Integrated Electric Heater / OLP TEMP | | kW / °C | 6.00 / 85 | | |

**Note:**

- In case it is necessary to indicate the air flow volume in (l/s), the value in ($m^3$/min.) shall be multiplied by 16.7 and rounded down the decimal point.
- If the EUROVENT Certified models can be operated under the “extra-low” temperature condition, -7°C DB and -8°C WB temperature with rated voltage 230V shall be used.
- Capacity is measured at outdoor temperature 7°C DB and 6°C WB with controlled water inlet 30°C and water outlet 35°C (EN 14511-2)
- Flowrate indicated are based on nominal capacity adjustment of leaving water temperature (LWT) 35°C and ΔT=5°C.
- *** The sound pressure level is measured with distance 1.0m from the unit and height at 1.5m. (Test carry out for cooling at ambient 35°C DB and Water Out 7°C, heating at ambient 7°C DB / 6°C WB and water out 55°C)
- **** The sound power level is measured with accordance to EN12102 under conditions of the EN14825.
- EER and COP classification is at 230V only in occordance with EU directive 2003/32/EC.
- **** The sound power level is measured with accordance to EN12102 under full load conditions. (Test carry out for cooling at ambient 35°C DB and Water Out 7°C, heating at ambient 7°C DB / 6°C WB and water out 55°C)

## 3.6 WH-SDC0509L6E5 WH-WDG09LE5

| Item | | Unit | Outdoor Unit | | |
|---|---|---|---|---|---|
| Performance Test Condition | | | EN 14511 / EN 14825 | | |
| Cooling Capacity | | Condition (Ambient/Water) | A35W7 | | |
| | | kW | 8.20 | | |
| | | BTU/h | 28000 | | |
| | | kcal/h | 7050 | | |
| Cooling EER | | W/W | 2.82 | | |
| | | kcal/hW | 2.42 | | |
| Heating Capacity | | Condition (Ambient/Water) | A7W35 | A2W35 | |
| | | kW | 9.00 | 7.00 | |
| | | BTU/h | 30700 | 23900 | |
| | | kcal/h | 7740 | 6020 | |
| Heating COP | | W/W | 4.55 | 3.41 | |
| | | kcal/hW | 3.91 | 2.94 | |
| Heating ErP | Low Temperature Application (W35) | | Warmer | Average | Colder |
| | Application | Climate | | | |
| | Pdesign | kW | 7.0 | 8.0 | 9.0 |
| | Tbivalent / TOL | °C | 2 / 2 | -10 / -10 | -15 / -22 |
| | SCOP / ns | (W/W) / % | 6.44 / 255 | 4.84 / 190 | 4.31 / 170 |
| | Annual Consumption | kWh | 1453 | 3417 | 5142 |
| | Class | | A+++ | A+++ | A++ |
| | Medium Temperature Application (W55) | | Warmer | Average | Colder |
| | Application | Climate | | | |
| | Pdesign | kW | 7.0 | 8.0 | 8.0 |
| | Tbivalent / TOL | °C | 2 / 2 | -7 / -10 | -15 / -22 |
| | SCOP / ns | (W/W) / % | 4.50 / 177 | 3.67 / 144 | 3.33 / 130 |
| | Annual Consumption | kWh | 2080 | 4499 | 5915 |
| | Class | | A+++ | A++ | A++ |
| Noise Level | | Condition (Ambient/Water) | A35W7 | A7W35 | A2W35 |
| | | dB (A) *** | Cooling: - | Heating: - | Heating: - |
| | | Power Level dB *** | Cooling: 63 | Heating: 63 | Heating: 63 |
| | | dB **** | - | Heating: 54 | Heating: 54 |
| Air Flow | | $m^3$/min ($ft^3$/min) | Cooling: 61.0 (2154)<br>Heating: 74.0 (2613) | | |
| Refrigeration Control Device | | | Expansion Valve | | |
| Refrigeration Oil | | $cm^3$ | PZ68S (1100) | | |
| Refrigerant (R290) Precharge / Maximum | | kg (oz) | 1.00 (35.3) / (-) | | |
| F-GAS | GWP | | 3 | | |
| | $CO^2$eq (ton) (Precharged / Maximum) | | 0.003 / (-) | | |
| Dimension | Height | mm (inch) | 996 (39-7/32) | | |
| | Width | mm (inch) | 980 (38-19/32) | | |
| | Depth | mm (inch) | 430 (16-15/16) | | |
| Net Weight | | kg (lbs) | 97 (214) | | |

| Item | | | Unit | Outdoor Unit | | |
|---|---|---|---|---|---|---|
| Water Piping between O/D & I/D | Pipe Diameter (Inner) | | mm | 25 | | |
| | Standard Length | | m (ft) | 5.0 / 16.4 | | |
| | Maximum Pipe Length | | m (ft) | 30.0 (98.4) | | |
| | I/D & O/D Height Difference | | m (ft) | 10.0 (32.8) | | |
| | Water Pipe Connector | Indoor | mm (inch) | 1 | | |
| | | Outdoor | mm (inch) | 1 | | |
| Compressor | Type | | | Hermetic Motor Compressor (Rotary) | | |
| | Motor Type | | | Synchronous Electric Motor (4-poles) | | |
| | Rated Output | | kW | 1.70 | | |
| Fan | Type | | | Propeller Fan | | |
| | Material | | | PP | | |
| | Motor Type | | | DC (8-poles) | | |
| | Input Power | | W | - | | |
| | Output Power | | W | 120 | | |
| | Fan Speed | | rpm | Cooling: 570<br>Heating: 560 | | |
| Heat Exchanger | Fin material | | | Aluminium (Pre Coat) | | |
| | Fin Type | | | Corrugated Fin | | |
| | Row × Stage × FPI | | | 2 × 36 × 19 | | |
| | Size (W × H × L) | | mm | 36.38 × 756.0 × 868.8 : 897.0 | | |
| Hot Water Coil | Type | | | Brazed Plate | | |
| | No. of Plates | | | 26 | | |
| | Size (W × H × L) | | mm | 57.8 × 524 × 117 | | |
| | Water Flow Rate | | l/min ($m^3$/h) | Cooling: 23.5 (1.4)<br>Heating: 25.8 (1.5) | | |
| Power Source (Phase, Voltage, Cycle) | | | Ø | Single | | |
| | | | V | 230 | | |
| | | | Hz | 50 | | |
| Input Power | | | Condition (Ambient/Water) | A35W7 | A7W35 | A2W35 |
| | | | kW | Cooling: 2.91 | Heating: 1.98 | Heating: 2.05 |
| Maximum Input Power For Heatpump System | | | kW | 3.56 | | |
| Power Supply 1 : Phase (Ø) / Max. Current (A) / Max. Input Power (W) | | | | 1Ø / 15.8 / 3.56k | | |
| Power Supply 2 : Phase (Ø) / Max. Current (A) / Max. Input Power (W) | | | | 1Ø / 26.0 / 6.00k | | |
| Power Supply 3 : Phase (Ø) / Max. Current (A) / Max. Input Power (W) | | | | - / - / - | | |
| Starting Current | | | A | 12.9 | | |
| Running Current | | | Condition (Ambient/Water) | A35W7 | A7W35 | A2W35 |
| | | | A | Cooling: 12.9 | Heating: 8.8 | Heating: 9.1 |
| Maximum Current For Heatpump System | | | A | 15.8 | | |
| Power Factor<br>Power factor means total figure of compressor and outdoor fan motor. | | | % | Cooling: 98 | Heating: 98 | Heating: 98 |
| Power Cord | Number of core | | | - | | |
| | Length | | m (ft) | - | | |
| Thermostat | | | | Electronic Control | | |
| Protection Device | | | | Electronic Control | | |
| Pressure Relief Valve Water Circuit | | | kPa | Open: 300, Close: 210 and below | | |

| Item | | Unit | Indoor Unit | | |
|---|---|---|---|---|---|
| Performance Test Condition | | | EN 14511 / EN 14825 | | |
| Operation Range | Outdoor Ambient | °C (min. / max.) | Cooling: 10 / 43<br>Heating (Circuit): -25 / 35 | | |
| | Water Outlet | °C (min. / max.) | Cooling: 5 / 20<br>Heating (Circuit): 20 / 55 (Below Ambient -20 °C) *3<br>Heating (Circuit): 20 / 75 (Above Ambient -10 °C) *3 | | |
| Internal Pressure Differential | | kPa | Cooling: 32.0<br>Heating: 36.0 | | |
| Noise Level | | Condition (Ambient/Water) | A35W7 | A7W35 | A2W35 |
| | | dB (A) | Cooling: 30*** | Heating: 30*** | Heating: 30*** |
| | | Power Level dB | Cooling: 43*** | Heating: 43*** | Heating: 43*** |
| Dimension | Depth | mm (inch) | 348 (13-23/32) | | |
| | Width | mm (inch) | 500 (19-11/16) | | |
| | Height | mm (inch) | 892 (35-1/8) | | |
| Net Weight | | kg (lbs) | 34 (75) | | |
| Water Pipe Diameter | Room | mm (inch) | 31 (1-1/4) | | |
| | Shower | mm (inch) | - | | |
| Water Drain Hose Inner Diameter | | mm (inch) | 15 (9/16) | | |
| Pump | Motor Type | | Brushless DC Motor (Sensorless vector control system) | | |
| | No. of Speed | | 7 (Software Selection) | | |
| | Input Power | W | 145 | | |
| Flow Sensor | Type | | Vortex (Piezoelectric sensor) | | |
| | Measuring range | l/min | 5 ~ 60 | | |
| Pressure Release Valve | | kPa | Open: 800, Close: 640 and below | | |
| Protection Device | | A | Earth Leakage Circuit Breaker (30 ~ 40) | | |
| Expansion Vessel | Volume | l | 10 | | |
| | MWP | bar | 3 | | |
| Capacity of Integrated Electric Heater / OLP TEMP | | kW / °C | 6.00 / 85 | | |

**Note:**

- In case it is necessary to indicate the air flow volume in (l/s), the value in ($m^3$/min.) shall be multiplied by 16.7 and rounded down the decimal point.
- If the EUROVENT Certified models can be operated under the “extra-low” temperature condition, -7°C DB and -8°C WB temperature with rated voltage 230V shall be used.
- Capacity is measured at outdoor temperature 7°C DB and 6°C WB with controlled water inlet 30°C and water outlet 35°C (EN 14511-2)
- Flowrate indicated are based on nominal capacity adjustment of leaving water temperature (LWT) 35°C and ΔT=5°C.
- *** The sound pressure level is measured with distance 1.0m from the unit and height at 1.5m. (Test carry out for cooling at ambient 35°C DB and Water Out 7°C, heating at ambient 7°C DB / 6°C WB and water out 55°C)
- **** The sound power level is measured with accordance to EN12102 under conditions of the EN14825.
- EER and COP classification is at 230V only in occordance with EU directive 2003/32/EC.
- **** The sound power level is measured with accordance to EN12102 under full load conditions. (Test carry out for cooling at ambient 35°C DB and Water Out 7°C, heating at ambient 7°C DB / 6°C WB and water out 55°C)

# 4. Features

- **Inverter Technology**
  - Energy saving

- **High Efficiency**

- **Long Installation Piping**
  - Long piping up to 30 meter

- **A-class energy efficiency pump**
  - Water pump speed can be set by selection at control panel

- **Improved deice cycle**

- **Protection Feature**
  - Random auto restart after power failure for safety restart operation
  - Gas leakage protection
  - Prevent compressor reverse cycle
  - Inner protector to protect compressor

- **Serviceability Feature**
  - Breakdown Self Diagnosis function
  - System Status Check Buttons for servicing purpose
  - Front maintenance design for outdoor unit

# 5. Location of Controls and Components

## 5.1 Indoor Unit

### 5.1.1 Remote Controller buttons and display

The LCD display as shown in this manual are for instructional purpose only, and may differ from the actual unit.

| Buttons / Indicator | |
|---|---|
| ① | **Quick Menu button** |
| ② | **Back button**<br>Returns to the previous screen |
| ③ | **LCD Display**<br>(Actual - Dark background with white icons) |
| ④ | **Main Menu button**<br>For function setup |
| ⑤ | **ON/OFF button**<br>Starts/Stops operation |
| ⑥ | **Operation indicator**<br>Illuminates during operation, blinks during alarm. |

When the backlight is off, press any button to turn it on.
(Do not press button ⑤)
The time until the backlight turns off can be changed in the Menu (Personal setup)

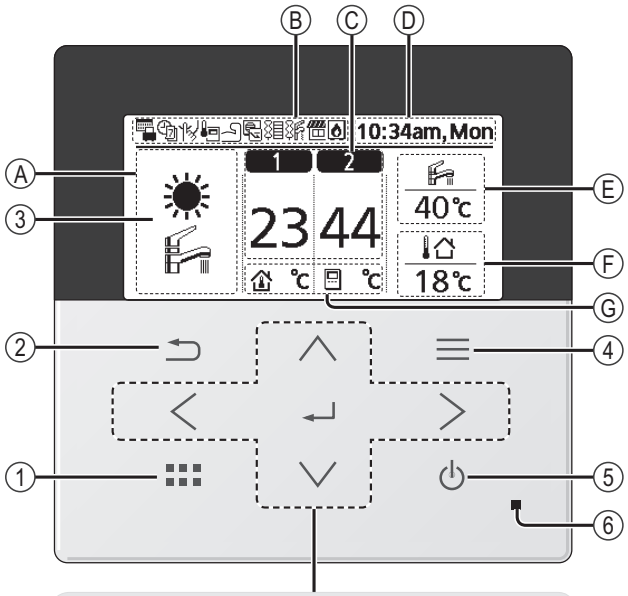


**Cross key buttons**
Selects an item.

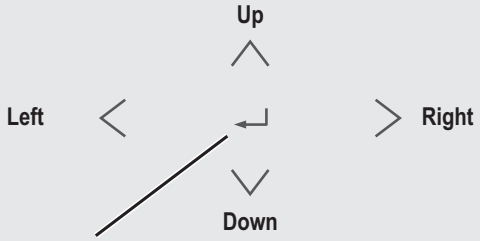


**Enter button**
Fixes the selected content.

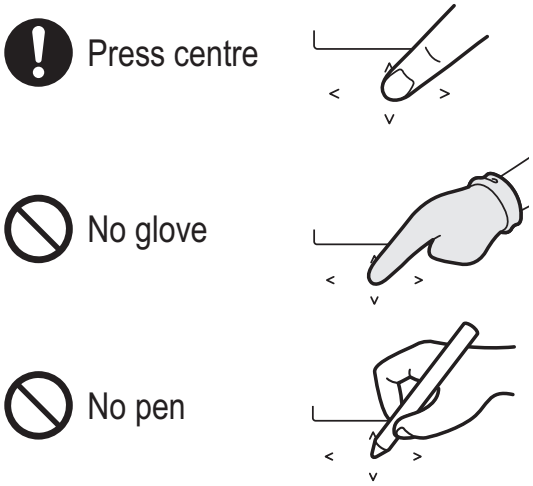

## Display

Ⓐ **Mode selection**

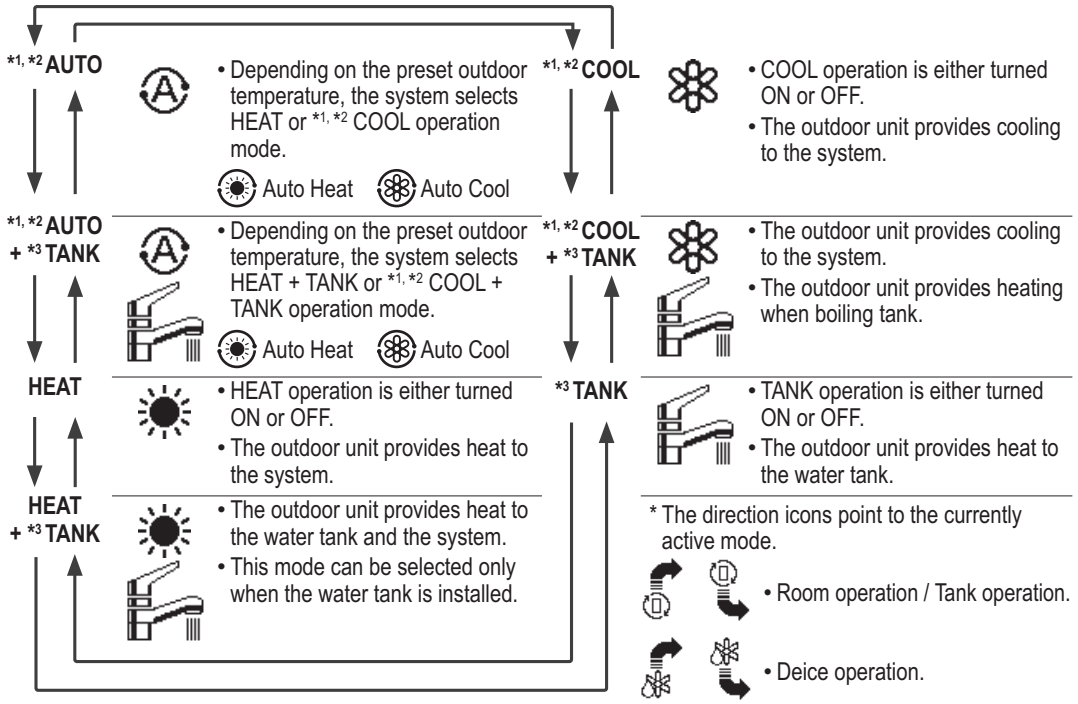


Ⓑ **Operation icons**

The status of operation is displayed.
Icon will not display (under operation OFF screen) whenever operation is OFF except weekly timer.

| | | |
|---|---|---|
| Holiday operation status | Weekly Timer operation status | Quiet operation status |
| Zone:Room Thermostat →Internal sensor status | Powerful operation status | Demand Control or SG ready or SHP status |
| Room Heater status | Tank Heater status | Solar status |
| Bivalent status (Boiler) | | |

Ⓒ **Temperature of each zone**

Ⓓ **Time and day**

Ⓔ **Water Tank temperature**

Ⓕ **Outdoor temperature**

Ⓖ **Sensor type/Set temperature type icons**

| | | |
|---|---|---|
| Water Temperature →Compensation curve | Water Temperature →Direct | Pool only |
| Room Thermostat →External | Room Thermostat →Internal | Room Thermistor |

*1 The system is locked to operate without COOL mode. It can be unlocked only by authorised installers or our authorised service partners.
*2 Only displayed when COOL mode is unlocked (This means when COOL mode is available).
*3 Only displayed when Tank connection is Yes.

## 5.1.2 Initialization

Before starting to install the various menu settings, please initiate the Remote Controller by selecting the language of operation and installing the date and time correctly.
When power is turned on for the first time, it becomes the setting screen automatically. It can also be set from personal setting of the menu.

### Selecting the language

**Wait while the display is initializing.**
**When initializing screen ends, it turns to normal screen.**
**When any button is pressed, language setting screen appears.**

① **Scroll with ∨ and ∧ to select the language.**

② **Press ↵ to confirm the selection.**

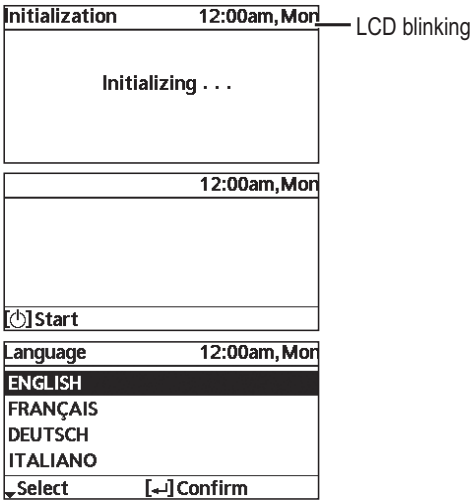


### Setting the clock

① **Select with ∨ or ∧ how to display the time, either 24h or am/pm format (for example, 15:00 or 3:00 pm).**

② **Press ↵ to confirm the selection.**

③ **Use ∨ and ∧ to select year, month, day, hour and minutes. (Select and move with > and press ↵ to confirm.)**

④ **Once the time is set, time and day will appear on the display even if the Remote Controller is turned OFF.**

⑤ **Final precaution step to check and confirm whether outdoor front grille is fixed before operating the unit for safety purpose.**
**Select Yes if outdoor front grille is already fixed. Then it will proceed to main screen.**
**Select No if outdoor front grille is not yet fixed. A caution message will pop up to remind on the installation.**

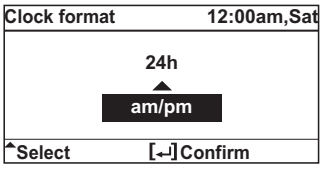


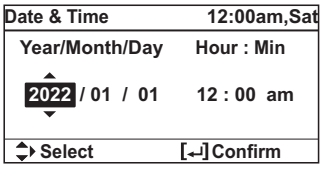


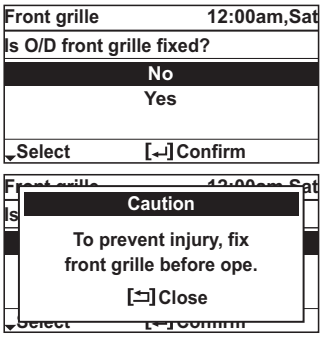


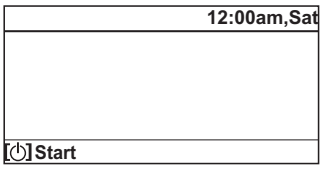

### 5.1.3 Quick Menu

After the initial settings have been completed, you can select a quick menu from the following options and edit the setting.

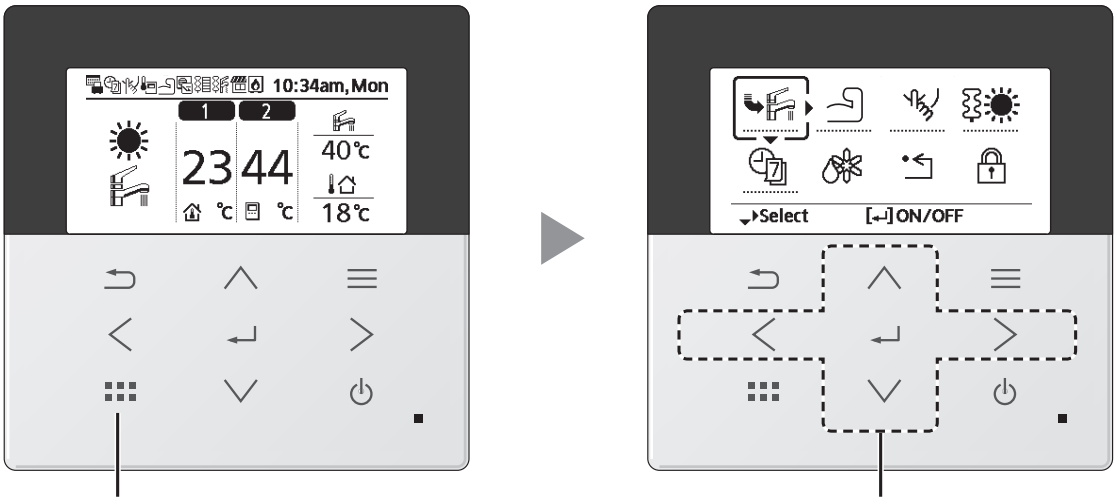


① Press ⠿ to display the quick menu.

② Use ∧ ∨ < > to select menu.

③ Press ↵ to turn on/off the select menu.

## Quick Menu

| | | | |
|---|---|---|---|
| *1 Force DHW | Powerful | Quiet | Force Heater |
| Weekly Timer | Force Defrost | Error Reset | R/C Lock |

Select [↵] ON/OFF

Select each setting and confirm the setting according to the instructions displayed at the bottom of the screen. (The icons refer to each selection key.)

### To return to the Main Screen,

Press ⠿ or ↩ .

*1 Only displayed when Tank connection is Yes.

## 5.1.4 How to use the Quick Menu

### Force DHW

Select this icon to turn the Tank DHW on or off.

**Press ↵ to confirm your selection.**

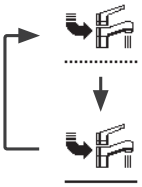

• Force DHW is turned off.

• Force DHW is turned on.

**Note:**

• Force DHW is disabled when Force Heater is turned on.

• When Force DHW is turned off, operation & mode should change back to the previous memorized status.

### Powerful

Select this icon to operate the heating/cooling system powerfully.

**Press ↵ to confirm your selection.**

(The powerful operation starts approximately 1 minute after ↵ is pressed.)

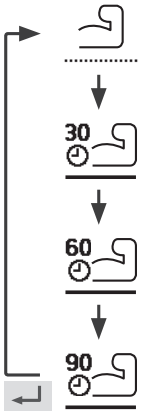


• Powerful mode is set off.

• The Powerful mode operates for 30 minutes.

• The Powerful mode operates for 60 minutes.

• The Powerful mode operates for 90 minutes.

**Note:**

• Powerful is disabled when operation is turned OFF.

## Quiet

Select this icon to operate quietly.

**Press ↵ to confirm your selection.**

(The quiet operation starts approximately 1 minute after ↵ is pressed.)

- Quiet mode is set off.
- The Quiet mode operates at level 1.
- The Quiet mode operates at level 2.
- The Quiet mode operates at level 3.
  Level 3 is the most quiet mode.
- Select this to set a timer for the Quiet mode operation.

After 1 sec delay.

Do you want to edit
Quiet timer pattern?

Yes ▶ No

**Select "Yes".**
- Select "Yes" using < > buttons.

| Pattern | Time | Level |
|---|---|---|
| 1 | 6:00 am | 2 |
| 2 | 8:00 pm | 1 |
| 3 | 10:00 pm | 0 |

**Select pattern "1" ~ "6".**

Edit
Delete

**Select "Edit".**
- If you select "Delete", the timer setting of the selected pattern will be deleted.

12 : 00 pm

**Set the hour and minutes.**

**Select the level of Quiet.**

Set time is overlapped!

[⮌]Close

**Note:**
- If the time overlaps with another pattern, "Set time is overlapped!" will appear on the screen.

## Force Heater

Select to force the Heater on.

**Press ↵ to confirm your selection.**

(The Force Heater mode starts approximately 1 minute after ↵ is pressed.)

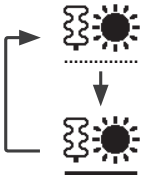

- Force Heater is turned off.
- Force Heater is turned on.

**Note:**

- Force Heater is disabled whenever operation is already on and “Disabled due to operation ON!” will be displayed.

**Disabled due to operation ON!**

**[⮌]Close**

## Weekly Timer

Select this icon to delete (cancel) or change the pre-set Weekly Timer.

**Press ↵ to confirm your selection.**

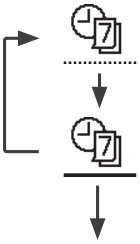

• Timer is not ON.

• Timer is set.

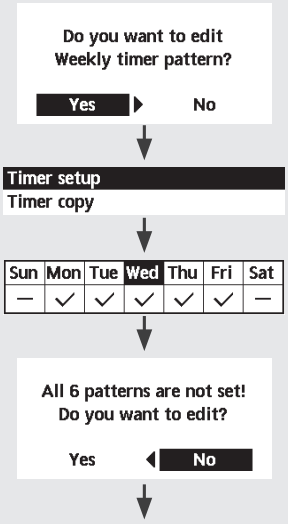


**Select "Yes".**

• If you select "No", the screen will return to the Quick Menu Screen.

• Timer setup: Select Timer setup to edit the Weekly Timer.

• Timer copy: Select to copy a timer setting.

**[Example of a Timer setup]**

Select the day(s) which you wish to edit using ∧ ∨ buttons.

If all 6 patterns are not preset, this screen will be displayed.

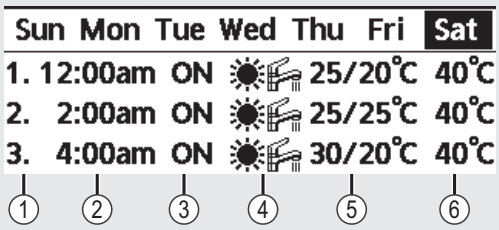


① **Select pattern "1" ~ "6".**

② **Set the hour and minutes of the Timer.**

③ **Select ON/OFF of the Timer.**

④ **Select the operation mode.**

Ⓐ / Ⓐ / / / / / /

• Select mode using ∧ ∨ buttons.

⑤ **Set the temperature for both Zone 1 and 2 (if your system has the 2-Zone setting).**

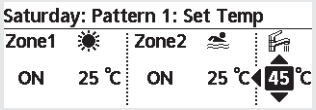


⑥ **Set the Tank temperature.**

**Note:**

• Timer is disabled when Force Heater is turned on or Heat-Cool SW is enabled.

• If you have preset the Weekly Timer on 2 zones, you must repeat the same procedure with Zone 2.

## Force Defrost

Select to defrost the frozen pipes.

**Press ↵ to confirm your selection.**
(When the mode is accepted, below screen will be displayed.)

```
Request accepted!

[⮌]Close
```

## Error Reset

Select to restore the previous settings when error has occurred.

**Press ↵ to confirm your selection.**
(When the mode has been accepted, below screen will be displayed.)

```
Request accepted!

[⮌]Close
```

- Make sure all units are turned off before selecting this mode which restores the whole system to the previous settings.

## R/C Lock

Select to lock the Remote Controller.

**Press ↵ to confirm your selection.**
(When the mode has been accepted, below screen will be displayed.)

```
Do you want to
lock remote control?

Yes ▶   No
```

**Select "Yes".**
(The Main Screen will be locked.)
- If "No" is selected, the screen will return to the Main Screen.

### To unlock the Remote Controller

**Press any key.**
(When the mode has been accepted, below screen will be displayed.)

```
0 * * *
```

Enter any 4 digits of number (if the number is correct, the screen will be unlocked).

### To reset forgotten password (under operation OFF screen)

**Press ⮌ , ↵ and > continuously for 5 seconds.**
(When the mode has been accepted, below screen will be displayed.)

```
Reset password
Reset
```

**Select "Reset".**

```
1.Password is reset to 0000
2.Remote control is unlocked
```

(The screen will be off after 3 seconds.)

## 5.1.5 Menus (For user)

Select menus and determine settings according to the system available in the household. All initial settings must be done by an authorised dealer or a specialist. It is recommended that all alterations of the initial settings are also done by an authorised dealer or a specialist.

- After initial installation, you may manually adjust the settings.
- The initial setting remains active until the user changes it.
- The Remote Controller can be used for multiple installations.
- Ensure the operation indicator is OFF before setting.
- The system may not work properly if set wrongly. Please consult an authorised dealer.

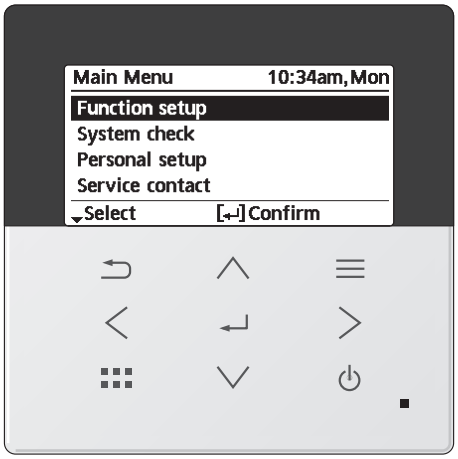


**To display <Main Menu>:**

**To select menu:**

**To confirm the selected content:**

| Menu | Default Setting | Setting Options / Display |
|---|---|---|
| **1 Function setup** | | |
| **1.1 > Weekly timer** | | |
| Once the weekly timer is set up, User can edit from Quick Menu. To set up to 6 patterns of operation on a daily basis.<br>• Disabled if Heat-Cool SW is select "Yes" or if Force Heater is on. | **Timer setup**<br>Select day of the week and set the patterns needed (Time / Operation ON/OFF / Mode) | Weekly timer 10:34am,Mon<br>Sun Mon Tue Wed Thu Fri Sat<br>1. 8:00am ON 40℃<br>2. 12:00pm ON 24/28℃ 40℃<br>3. 1:00pm ON 12/10℃<br>Day Pattern Edit |
| | **Timer copy**<br>Select day of the week | |
| **1.2 > Holiday timer** | | |
| To save energy, a holiday period may be set to either turn OFF the system or lower the temperature during the period. | OFF | ON<br>OFF |
| | **> ON** | |
| | Holiday start and end.<br>Date and time | Holiday: End 10:34am,Mon<br>Year/Month/Day Hour : Min<br>2022 / 01 / 01 10 : 00 am<br>Select Confirm |
| | OFF or lowered temperature | |
| • Weekly timer setting may be temporarily disabled during Holiday timer setting but it will be restored once the Holiday timer is completed. | | |
| **1.3 > Quiet timer** | | |
| To operate quietly during the preset period.<br>6 patterns may be set.<br>Level 0 means the mode is off. | Time to start Quiet :<br>Date and time | Quiet 10:34am,Mon<br>Pattern Time Level<br>1 8:00am 0<br>2 5:00pm 1<br>3 11:00pm 3<br>Select Edit |
| | Level of quietness:<br>0 ~ 3 | |

| Menu | Default Setting | Setting Options / Display |
|---|---|---|
| **1.4 > Quiet priority** | | |
| • To select priority during Quiet mode between Sound and Capacity.<br>• If Sound priority is selected, unit will operate in quiet condition only.<br>• If Capacity priority is selected, unit will operate in quiet condition but it will prioritize on providing required capacity at the same time. | Sound | Sound<br>▼<br>Capacity |
| **1.5 > Room heater** | | |
| To set the room heater ON or OFF. | OFF | ON<br>▲<br>OFF |
| **1.6 > *1 Tank heater** | | |
| To set the tank heater ON or OFF. | OFF | ON<br>▲<br>OFF |
| **1.7 > *1 Sterilization** | | |
| To set the auto sterilization ON or OFF. | ON | ON<br>▼<br>OFF |

• Do not use the system during sterilization in order to prevent scalding with hot water, or overheating of shower.
• Ask an authorised dealer to determine the level of sterilization function field settings according to the local laws and regulations.

*1 Only displayed when Tank connection is Yes.

| Menu | Default Setting | Setting Options / Display |
|---|---|---|
| **2 System check** | | |
| **2.1 > Energy monitor** | | |
| Present or historical chart of energy consumption, generation or COP.<br>• COP= Coefficient of Performance.<br>• For historical chart, the period is selected from 1 day/1 week/1year.<br>• Energy consumption (kWh) of heating, *1, *2 cooling, *3 tank and total may be retrieved.<br>• The total power consumption is an estimated value based on AC 230 V and may differ from value measured by precise equipment. | **Present**<br>Select and retrieve<br>**Historical chart**<br>Select and retrieve | Total consumption (1year)<br>0 kWh<br>1year 1 2 3 4 5 6 7 8 9 10 11 12 Mth<br>Jan, 2022: 0.0 kWh Approx.<br>Month Mode *4 |
| **2.2 > System information** | | |
| Shows all system information in each area. | **Actual system information of 11 items: Inlet / Outlet / Zone 1 / Zone 2 / Tank / Buffer tank / Solar / Pool / COMP frequency / Pump flowrate / Water pressure**<br>*5 Select and retrieve | System information 10:34am,Mon<br>1. Inlet : 0℃<br>2. Outlet : 0℃<br>3. Zone 1 : 0℃<br>4. Zone 2 : 0℃<br>Page |
| **2.3 > Error history** | | |
| • Refer to Troubleshooting for error codes.<br>• The most recent error code is displayed at the top. | Select and retrieve | Error history 10:34am,Mon<br>1. --<br>2. --<br>3. --<br>4. --<br>[↵] Clear history |
| **2.4 > Compressor** | | |
| Shows the compressor performance. | Select and retrieve | Compressor 10:34am,Mon<br>1. Current frequency : 0 Hz<br>2. (OFF-ON) counter : 0<br>3. Total ON time : 0 h<br>[⮌] Back |
| **2.5 > Heater** | | |
| Total hours of ON time for Room heater/*3 Tank heater. | Select and retrieve | Heater 10:34am,Mon<br>Total ON time<br>: 0h<br>: 0h<br>[⮌] Back |

*1 The system is locked to operate without COOL mode. It can be unlocked only by authorised installers or our authorised service partners.
*2 Only displayed when COOL mode is unlocked (This means when COOL mode is available).
*3 Only displayed when Tank connection is Yes.
*4 If [Approx.] is shown on Energy Monitor display, data displayed on the remote controller is obtained through heat pump's internal calculation.
If [Approx.] is NOT shown on Energy Monitor display, data displayed on the remote controller is obtained by External Meters.
*5 Only displayed when each connection is Yes.

| Menu | Default Setting | Setting Options / Display |
|---|---|---|
| **3 Personal setup** | | |
| **3.1 > Remote control No.** | | |
| • To display remote control number of a particular remote controller so that installer and end user are well informed.<br>• Main remote controller is displayed as RC-1. Second remote controller is displayed as RC-2. | Select and retrieve | RC No. 10:34am,Mon<br>RC-1<br>[↵] Confirm |
| **3.2 > Touch sound** | | |
| Turns the operation sound ON/ OFF. | ON | ON<br>OFF |
| **3.3 > LCD contrast** | | |
| Sets the screen contrast. | 3 | LCD contrast 10:34am,Mon<br>Low High<br>◀▶Select [↵] Confirm |
| **3.4 > Backlight** | | |
| Sets the duration of screen backlight. | 1 min | Backlight 10:34am,Mon<br>OFF 5 mins<br>15 secs 10 mins<br>1 min<br>▲Select [↵]Confirm |
| **3.5 > Backlight intensity** | | |
| Sets screen backlight brightness. | 4 | Backlight intensity 10:34am,Mon<br>Dark Bright<br>◀ Select [↵] Confirm |
| **3.6 > Clock format** | | |
| Sets the type of clock display. | am/pm | Clock format 10:34am,Mon<br>24h<br>am/pm<br>▲Select [↵] Confirm |
| **3.7 > Date & Time** | | |
| Sets the present date and time. | Year / Month / Day / Hour / Min | Date & Time 10:34am,Mon<br>Year/Month/Day Hour : Min<br>2022 / 01 / 01 10 : 00 am<br>▲▼▶ Select [↵] Confirm |

| Menu | Default Setting | Setting Options / Display |
|---|---|---|
| **3.8 > Language** | | |
| Sets the display language for the top screen. | ENGLISH / FRANÇAIS / DEUTSCH / ITALIANO / ESPAÑOL / DANISH / SWEDISH / NORWEGIAN / POLISH / CZECH / NEDERLANDS / TÜRKÇE / SUOMI / MAGYAR / SLOVENŠČINA / HRVATSKI / LIETUVIŲ / PORTUGUÊS / БЪЛГАРСКИ / EESTI / LATVIEŠU / ROMÂNĂ / SHQIP / SLOVENČINA / МАКЕДОНСКИ / УКРАЇНСЬКА / ΕΛΛΗΝΙΚΑ | Language 10:34am, Mon<br>ENGLISH<br>FRANÇAIS<br>DEUTSCH<br>ITALIANO<br>Select [↵] Confirm |
| **3.9 > Unlock password** | | |
| 4 digit password for all the settings. | 0000 | Unlock password 10:34am, Mon<br>0000<br>Select [↵] Confirm |
| **4 Service contact** | | |
| **4.1 > Contact 1 / Contact 2** | | |
| Preset contact number for installer. | Select and retrieve | Service setup 10:34am, Mon<br>Contact 1<br>Name : Bryan Adams<br>: 08812345678<br>Select |

## 5.1.6 Menus (For installer)

| Menu | Default Setting | Setting Options / Display |
|---|---|---|
| **5 Installer setup > System setup** | | |
| **5.1 > Optional PCB connectivity** | | |
| To connect to the external PCB required for servicing. | No | Yes<br>▲<br>No |

• If the external PCB is connected (optional), the system will have following additional functions:

① Control over 2 zones (including the swimming pool and the function to heat water in it).
② Solar function (the solar thermal panels connected to either the DHW (Domestic Hot Water) Tank or the Buffer Tank.
  • DHW is not applicable for WH-ADC models.
③ External compressor switch.
④ External error signal.
⑤ SG ready control.
⑥ Demand control.
⑦ Heat-Cool SW

| | | |
|---|---|---|
| **5.2 > Zone & Sensor** | | |
| To select the sensors and to select either 1 zone or 2 zone system. | **Zone**<br>• After selecting 1 or 2 zone system, proceed to the selection of room or swimming pool.<br>• If the swimming pool is selected, the temperature must be selected for △T temperature between 0°C ~ 10 °C. | Zone & Sensor 10:34am,Mon<br>Zone<br>1 Zone system<br>2 Zones system<br>Select [↵] Confirm |
| | **Sensor**<br>For room thermostat, there is a further selection of external or internal.<br>• If select internal, there is a further selection of RC-1 or RC-2 (only available when Zone selection is 1 zone system).<br>Select RC-1 if main remote controller's thermistor is to be used for room temperature control and vice versa. | Zone & Sensor 10:34am,Mon<br>Sensor<br>Water temperature<br>Room thermostat<br>Room thermistor<br>Select [↵] Confirm |
| **5.3 > Heater capacity** | | |
| To reduce the heater power if unnecessary.*<br>3 kW / 6 kW / 9 kW<br><br>* Options of kW vary depending on the model. | | Heater capacity 10:34am,Mon<br>3 kW<br>[↵] Confirm |
| **5.4 > Anti freezing** | | |
| To activate or deactivate the water freeze prevention when the system is OFF | Yes | Yes<br>▼<br>No |
| **5.5 > Tank connection** | | |
| To connect tank to the system. | No | Yes<br>▲<br>No |

| Menu | Default Setting | Setting Options / Display |
|---|---|---|
| **5.6 > DHW capacity** | | |
| To select tank heating capacity to variable or standard. Variable capacity heat up tank with fast mode and keep the tank temperature with efficient mode. While standard capacity heat up tank with rated heating capacity. | Variable | Variable<br>Standard |
| **5.7 > Buffer tank connection** | | |
| To connect tank to the system and if selected YES, to set △T temperature. | No | Yes<br>No |
| | **> Yes** | |
| | 5 °C | Set △T for Buffer Tank<br>Buffer tank 10:34am,Mon<br>ΔT for Buffer tank<br>Range: (0℃~10℃)<br>Steps: ±1℃<br>5 ℃<br>Select [↵] Confirm |
| **5.8 > Tank heater** | | |
| To select external or internal tank heater and if External is selected, set a timer for the heater to come on.<br>* This option is available if Tank connection is selected (YES). | Internal | Tank heater 10:34am,Mon<br>External<br>Internal<br>Select [↵] Confirm |
| | **> External** | |
| | 1:30 | Tank heater ON time set.<br>Tank heater 10:34am,Mon<br>Tank heater: ON time<br>Range: (0:20~3:00)<br>Steps: ±0:05<br>1:30<br>Select [↵] Confirm |
| **5.9 > Base pan heater** | | |
| To select whether or not optional base pan heater is connected.<br>* Type A - The base pan heater activates only during deice operation.<br>* Type B - The base pan heater activates when outdoor ambient temperature is 5 °C or lower. | No | Yes<br>No |
| | **> Yes** | |
| | A | Set base pan heater type*.<br>Base pan heater type 10:34am,Mon<br>A<br>B<br>Select [↵] Confirm |
| **5.10 > Alternative outdoor sensor** | | |
| To select an alternative outdoor sensor. | No | Yes<br>No |

| Menu | Default Setting | Setting Options / Display |
|---|---|---|
| **5.11 > Bivalent connection** | | |
| To select to enable or disable bivalent connection. | No | Yes<br>▲<br>No |
| **> Yes** | | |
| To select either auto control pattern or SG ready input control pattern or smart control pattern.<br>- This selection only display to select when optional pcb connection set to Yes. | Auto | Auto<br>SG ready<br>Smart |
| To select a bivalent connection to allow an additional heat source such as a boiler to heat-up the buffer tank and domestic hot water tank when heatpump capacity is insufficient at low outdoor temperature. The bivalent feature can be set-up either in alternative mode (heatpump and boiler operate alternately), or in parallel mode (both heatpump and boiler operate simultaneously), or in advance parallel mode (heatpump operates and boiler turns on for buffer-tank and/or domestic hot water depending on the control pattern setting options). | **> Yes > Auto** | |
| | -5 °C<br>Set outdoor temperature for turn ON Bivalent connection. | Bivalent connection 10:34am,Mon<br>Turn ON: Outdoor temp<br>Range: (-15℃~35℃)<br>Steps: ±1℃<br>-5 ℃<br>Select [↵] Confirm |
| | **Yes > After selecting the outdoor temperature** | |
| | **Control pattern**<br>Alternative / Parallel / Advanced parallel<br>• Select advanced parallel for bivalent use of the tanks. | Bivalent connection 10:34am,Mon<br>Control pattern<br>Alternative<br>Parallel<br>Advanced parallel<br>Select [↵] Confirm |
| | **Control pattern > Alternative** | |
| | OFF<br>Option to set external pump either ON or OFF during bivalent operation. Set to ON if system is simple bivalent connection. | Bivalent connection 10:34am,Mon<br>External pump<br>ON<br>▲<br>OFF<br>Select [↵] Confirm |
| | **Control pattern > Advanced parallel** | |
| | Heat<br>Selection of the tank<br>• "Heat" implies Buffer Tank and "DHW" implies Domestic Hot Water Tank. | Bivalent connection 10:34am,Mon<br>Advanced parallel<br>Heat<br>DHW<br>Select [↵] Confirm |
| | **Control pattern > Advanced parallel > Heat > Yes** | |
| | • Buffer Tank is activated only after selecting "Yes". | Bivalent connection 10:34am,Mon<br>Advanced parallel: Heat<br>Yes<br>No<br>Select [↵] Confirm |

| Menu | Default Setting | Setting Options / Display | |
|---|---|---|---|
| | -8 °C | Set the temperature threshold to start the bivalent heat source. | Bivalent connection 10:34am,Mon<br>Heat start: Target temp.<br>Range: (-10℃~0℃)<br>Steps: ±1℃ -8 ℃<br>Select [↵] Confirm |
| | 0:30 | Delay timer to start the bivalent heat source (in hour and minutes). | Bivalent connection 10:34am,Mon<br>Heat start: Delay time<br>Range: (0:00~1:30)<br>Steps: ±0:05 0:30<br>Select [↵] Confirm |
| | -2 °C | Set the temperature threshold to stop the bivalent heat source. | Bivalent connection 10:34am,Mon<br>Heat stop: Target temp.<br>Range: (-10℃~0℃)<br>Steps: ±1℃ -2 ℃<br>Select [↵] Confirm |
| | 0:30 | Delay timer to stop the bivalent heat source (in hour and minutes). | Bivalent connection 10:34am,Mon<br>Heat stop: Delay time<br>Range: (0:00~1:30)<br>Steps: ±0:05 0:30<br>Select [↵] Confirm |
| | **Control pattern > Advanced parallel > DHW > Yes** | | |
| | • DHW Tank is activated only after selecting "Yes". | | Bivalent connection 10:34am,Mon<br>Advanced parallel: DHW<br>Yes<br>No<br>Select [↵] Confirm |
| | 0:30 | Delay timer to start the bivalent heat source (in hour and minutes). | Bivalent connection 10:34am,Mon<br>DHW: Delay time<br>Range: (0:30~1:30)<br>Steps: ±0:05 0:30<br>Select [↵] Confirm |
| SG ready input control for bivalent system follow below input condition. | **> Yes > SG ready** | | |
| | OFF | Option to set external pump either ON or OFF during bivalent operation. Set to ON if system is simple bivalent connection. | Bivalent connection 10:34am,Mon<br>External pump<br>ON<br>OFF<br>Select [↵] Confirm |

| SG signal | | Operation pattern |
|---|---|---|
| Vcc-bit1 | Vcc-bit2 | |
| Open | Open | Heat Pump OFF, Boiler OFF |
| Short | Open | Heat Pump ON, Boiler OFF |
| Open | Short | Heat Pump OFF, Boiler ON |
| Short | Short | Heat Pump ON, Boiler ON |

| Menu | Default Setting | Setting Options / Display |
|---|---|---|
| To do settings related to electricity and boiler so that unit is able to determine whether to operate heat pump or boiler at a particular period depends on operating cost of both heat sources. These settings are electricity price, boiler price, season, schedule etc. | > Yes > Smart | |
| | OFF | Option to set external pump either ON or OFF during bivalent operation. Set to ON if system is simple bivalent connection.<br>Bivalent connection 10:34am,Mon<br>External pump<br>ON<br>OFF<br>Select [↵] Confirm |
| | > Yes > Smart > After selecting for the external pump > Energy price | |
| | - Select **Electricity** to set on electricity price.<br>- Select **Boiler** to set on boiler price and its efficiency. | Bivalent connection 10:34am,Mon<br>Energy price<br>Electricity<br>Boiler<br>Select [↵] Confirm |
| | > Yes > Smart > After selecting for the external pump > Energy price > Electricity | |
| | 0.0 * / kWh<br>- There are total 10 different prices can be set for Electricity:<br>Electricity price 1 ~ Electricity price 10<br>- Range is 0 ~ 999.9 * / kWh<br><br>- Press ∧ or ∨ to enter a setting screen as shown in Figure 1. Then start setting the value of electricity price.<br>- After finish setting a particular electricity price (eg. Electricity price 1), press < or > to go and set for other electricity price.<br>* Set the price according to value provided by electrical supply company. | Bivalent connection 10:34am,Mon<br>Electricity price 1<br>Range: (0~999.9 ∗/kWh)<br>Steps: ±0.1∗/kWh 0.0<br>Select<br><br>Figure 1<br>0 0 0.0<br>Select [↵] Confirm |
| | > Yes > Smart > After selecting for the external pump > Energy price > Boiler | |
| | 0.0 * / kWh<br>- Refer to method of Electricity price setting above for setting of boiler price.<br>- After finish setting of boiler price, set the boiler efficiency (Range : 0 ~ 99%). | Bivalent connection 10:34am,Mon<br>Boiler price<br>Range: (0~999.9 ∗/kWh)<br>Steps: ±0.1∗/kWh 0.0<br>Select [↵] Confirm |
| | 0%<br>* Set the price according to value provided by boiler or gas supply company. | Bivalent connection 10:34am,Mon<br>Boiler efficiency<br>Range: (0~99%)<br>Steps: ±1% 0<br>Select [↵] Confirm |

Remark : * implies cents in most currency except Czech crown.

| Menu | Default Setting | Setting Options / Display |
|---|---|---|
| | **> Yes > Smart > After selecting for the external pump > Schedule > Season setting** | |
| | Season 1 : Dec (Refers to Winter season)<br>Season 2 : Mar (Refers to Spring season)<br>Season 3 : Jun (Refers to Summer season)<br>Season 4 : Oct (Refers to Autumn season)<br>- There are total 4 seasons to be set<br>- Set the starting month for each season.<br>(Eg. when Season 1 is set to Dec and Season 2 is set to Mar, month of December to February will be treated as Season 1). | Bivalent connection 10:34am,Mon<br>Schedule<br>Season setting<br>Schedule setting<br>Select [↵] Confirm<br><br>Bivalent connection 10:34am,Mon<br>Season 1: Start month<br>Range: (Jan~Dec)<br>Steps: ±1month Dec<br>Select [↵] Confirm |
| | **> Yes > Smart > After selecting for the external pump > Schedule > Schedule setting** | |
| | Start time (Pattern 1) : 3:00am<br>Start time (Pattern 2) : 9:00am<br>Start time (Pattern 3) : 4:00pm<br>Start time (Pattern 4) : 9:00pm<br>- For each season, there are total 4 patterns can be set. | Bivalent connection 10:34am,Mon<br>Schedule setting<br>Season 1<br>Season 2<br>Season 3<br>Select [↵] Confirm |
| | Price (Pattern 1/2/3/4) : 1<br>- Set the target start time and the appropriate electricity price for each pattern. | Season 1 10:34am,Mon<br>Start time Price(∗/kWh)<br>1. 3:00am 0.0<br>2. 9:00am 0.0<br>3. 4:00pm 0.0<br>Select [↵] Edit |
| | - Select “1” to edit both start time and electricity price. Select “2” to edit electricity price only. | Select<br>1: To edit time & price<br>2: To edit price only<br>1 ▶ 2 |

| Menu | Default Setting | Setting Options / Display |
|---|---|---|
| | - Range of start time displayed can be in “24h” or “am/pm” format depend on setting of “Clock format”. | Season 1 10:34am,Mon<br>Pattern 1: Start time<br>Range: (0.00~23.00)<br>Steps: ±1hour 3.00<br>Select [↵] Confirm |
| | - Range of electricity price is 0 ~ 10 which refers back to the 10 different electricity price set previously (under “Energy price > Electricity”:<br>Electricity price 1 ~ Electricity price 10).<br>The price displayed on the upper right corner indicates the previous set value of Electricity price 1 to Electricity price 10.<br>* When the price is set to “0”, the electricity price will be treated as 0.0 * / kWh. It is for the convenience of installer when 0.0 is the desired setting value for a particular time. | Season 1 10:34am,Mon<br>Pattern 1: Price 0.0 *\/kWh<br>Range: (0~10)<br>Steps: ±1 0<br>Select [↵] Confirm |
| **5.12 > External SW** | | |
| | No | Yes<br>No |
| **5.13 > Solar connection** | | |
| • The optional PCB connectivity must be selected YES to enable the function.<br>• If the optional PCB connectivity is not selected, the function will not appear on the display.<br>• DHW is not applicable for WH-ADC models. | No | Yes<br>No |
| | **> Yes** | |
| | Buffer tank | Selection of the tank<br>Solar connection 10:34am,Mon<br>Buffer tank<br>DHW tank<br>Select [↵] Confirm |
| | **> Yes > After selecting the tank** | |
| | 10 °C | Set △T ON temperature<br>Solar connection 10:34am,Mon<br>ΔT Turn ON<br>Range: (6℃~15℃)<br>Steps: ±1℃ 10 ℃<br>Select [↵] Confirm |

| Menu | Default Setting | Setting Options / Display |
|---|---|---|
| | > Yes > After selecting the tank > △T ON temperature | |
| | 5 °C | Set △T OFF temperature<br>Solar connection 10:34am, Mon<br>ΔT Turn OFF<br>Range: (2℃~9℃)<br>Steps: ±1℃<br>5 ℃<br>Select [↵] Confirm |
| | > Yes > After selecting the tank > △T ON temperature > △T OFF temperature | |
| | 5 °C | Set Antifreeze temperature<br>Solar connection 10:34am, Mon<br>Anti freeze<br>Range: (-20℃~10℃)<br>Steps: ±1℃<br>5 ℃<br>Select [↵] Confirm |
| | > Yes > After selecting the tank > △T ON temperature > △T OFF temperature > After setting the antifreeze temperature | |
| | 80 °C | Set Hi limit<br>Solar connection 10:34am, Mon<br>Hi limit<br>Range: (70℃~90℃)<br>Steps: ±5℃<br>80 ℃<br>Select [↵] Confirm |
| **5.14** > External error signal | | |
| | No | Yes<br>No |
| **5.15** > Demand control | | |
| | No | Yes<br>No |
| **5.16** > SG ready | | |
| | No | Yes<br>No |
| | > Yes | |
| | 120 % | Capacity (1) & (2) of DHW (in %), Heat (in %) and Cool (in °C)<br>SG ready 10:34am, Mon<br>Capacity [1-0]: DHW<br>Range: (50%~150%)<br>Steps: ±5%<br>120 %<br>Select [↵] Confirm |
| **5.17** > External compressor SW | | |
| | No | Yes<br>No |
| **5.18** > Circulation liquid | | |
| To select whether to circulate water or glycol in the system. | Water | Circulation liquid 10:34am, Mon<br>Water<br>Glycol<br>Select [↵] Confirm |

| Menu | Default Setting | Setting Options / Display |
|---|---|---|
| **5.19 > Heat-Cool SW** | | |
| | No | Yes<br>▲<br>No |
| **5.20 > Force heater** | | |
| To turn on Force heater either manually (by default) or automatically. | Manual | Force heater 10:34am,Mon<br>Auto<br>▲<br>Manual<br>▲Select [↵] Confirm |
| **5.21 > Force defrost** | | |
| If auto selection is set, outdoor unit will start defrost operation if long heating hour operate during low outdoor temperature. | Manual | Auto<br>▲<br>Manual |
| **5.22 > Defrost signal** | | |
| To turn on defrost signal to stop fan coil during defrost operation. (If defrost signal set to yes, bivalent function will not available to use) | No | Yes<br>▲<br>No |
| **5.23 > Pump flowrate** | | |
| To set variable flow pump control or fix pump duty control. | △T | ΔT<br>▼<br>Max. Duty |
| **5.24 > DHW Defrost** | | |
| Allow system to run defrost by using hot water instead of room unit for better room comfort. | Yes | Yes<br>▼<br>No |
| **5.25 > Heating control** | | |
| To select unit operation condition whether to achieve set temperature faster or to save energy. | Comfort | Comfort<br>▼<br>Efficiency |

| Menu | Default Setting | Setting Options / Display |
|---|---|---|
| **5.26 > External meter** | | |
| To set which external meter to be used depends on meter connection.<br>There are generation meters and various types of electricity meters.<br>For generation meters, there are two connection systems :-<br>a) One generation meter system :<br>Heat-cool meter only<br>b) Two generation meter system :<br>Heat-cool meter and Tank meter | Heat-cool meter : No<br>* Tank meter : No<br>Elec. meter HP : No<br>Elec. meter 1 (PV) : No<br>Elec. meter 2 (Building) : No<br>Elec. meter 3 (Reserve) : No<br><br>* Only available if both Heat-cool meter and Tank connection are set to Yes. | External meter 10:34am,Mon<br>Heat-Cool meter<br>Tank meter<br>Elec. meter HP<br>Elec. meter 1 (PV)<br>Select [↵] Confirm<br><br>External meter 10:34am,Mon<br>Elec. meter HP<br>Elec. meter 1 (PV)<br>Elec. meter 2 (Building)<br>Elec. meter 3 (Reserve)<br>Select [↵] Confirm |
| | **> Heat-cool meter** | |
| | - Set Heat-cool meter to Yes when this generation meter is connected.<br>- It is to measure energy generation of heat pump unit during heating and cooling only operation (one generation meter system) or during heating, cooling and DHW operation (two generation meter system). | Yes<br>No |
| | **> Tank meter** | |
| | - Set Tank meter to Yes when this generation meter is connected.<br>- It is to measure energy generation of heat pump unit during DHW operation*.<br>* Only available if both Heat-cool meter and Tank connection are set to Yes. Only set Tank meter to Yes when the connection is two generation meter system. | Yes<br>No |
| | **> Elec. meter HP** | |
| | - Set Elec. meter HP to Yes when this electricity meter is connected.<br>- It is to measure energy consumption of heat pump unit. | Yes<br>No |
| | **> Elec. meter 1 (PV)** | |
| | - Set Elec. meter 1 (PV) to Yes when this electricity meter is connected.<br>- It is to measure energy generation of solar system. This data will be displayed only on Cloud system. | Yes<br>No |
| | **> Elec. meter 2 (Building)** | |
| | - Set Elec. meter 2 (Building) to Yes when this electricity meter is connected.<br>- It is to measure energy consumption of the building. This data will be displayed only on Cloud system. | Yes<br>No |

| Menu | Default Setting | Setting Options / Display |
|---|---|---|
| | > Elec. meter 3 (Reserve) | |
| | - Set Elec. meter 3 (Reserve) to Yes when this electricity meter is connected.<br>- It is to measure energy consumption. This data will be displayed only on Cloud system. | Yes<br>▲<br>No |

Remark : Elec. stands for “Electricity”
HP stands for “Heat pump”

| | | |
|---|---|---|
| **5.27** | > *1 Electrical anode | |
| | To enable or disable operation of electrical anode. | Yes<br>▲<br>No |

*1 It is used when supplying power to the electric anode of optional parts from inside the equipment.

| Menu | Default Setting | Setting Options / Display |
|---|---|---|
| **6 Installer setup > Operation setup** | | |
| To access to the four major functions or modes. | 4 main modes<br><br>Heat / *1, *2 Cool / *1, *2 Auto / *3 Tank | Operation setup 10:34am,Mon<br>Heat<br>Cool<br>Auto<br>Tank<br>Select [↵] Confirm |
| **6.1 > Heat** | | |
| To set various water & ambient temperatures for heating. | Water temp. for heating ON /<br>Outdoor temp. for heating OFF /<br>△T for heating ON /<br>Heater ON/OFF | Operation setup 10:34am,Mon<br>Heat<br>Water temp. for heating ON<br>Outdoor temp. for heating OFF<br>ΔT for heating ON<br>Select [↵] Confirm |
| | **> Water temp. for heating ON** | |
| | Compensation curve<br>Heating ON temperatures in compensation curve or direct input. | Operation setup 10:34am,Mon<br>Heat ON: Water temp.<br>Compensation curve<br>Direct<br>Select [↵] Confirm |
| | **> Water temp. for heating ON > Compensation curve** | |
| | X axis: -5 °C, 15 °C<br>Y axis: 55 °C, 35 °C<br>Input the 4 temperature points (2 on horizontal X axis, 2 on vertical Y axis). | Heat ON: Water temp.:Zone1<br>55°C 75<br>35°C 20<br>-20 -5°C 15°C 15<br>Select [↵] Confirm |
| | • Temperature range: X axis: -20 °C ~ 15 °C, Y axis: See below<br>• Temperature range for the Y axis input:<br>WH-WDG model: 20 °C ~ 75 °C<br>Regardless of the above setting, there is a limit to the water temperature. Refer to the operating condition on page 3.<br>• If 2 zone system is selected, the 4 temperature points must also be input for Zone 2.<br>• “Zone 1” and “Zone 2” will not appear on the display if only 1 zone system. | |
| | **> Water temp. for heating ON > Direct** | |
| | 35 °C<br>Temperature for heating ON | Operation setup 10:34am,Mon<br>Heat ON: Water temp.:Zone2<br>Range: (20°C~75°C)<br>Steps: ±1°C<br>35 °C<br>Select [↵] Confirm |
| | • Min. ~ Max. range is 20 °C ~ 75 °C:<br>WH-WDG model: 20 °C ~ 75 °C<br>Regardless of the above setting, there is a limit to the water temperature. Refer to the operating condition on page 3.<br>• If 2 zone system is selected, temperature set point must input for Zone 2.<br>• “Zone 1” and “Zone 2” will not appear on the display if only 1 zone system. | |

*1 The system is locked to operate without COOL mode. It can be unlocked only by authorised installers or our authorised service partners.
*2 Only displayed when COOL mode is unlocked (This means when COOL mode is available).
*3 Only displayed when Tank connection is Yes.

| Menu | Default Setting | Setting Options / Display | |
|---|---|---|---|
| | > Outdoor temp. for heating OFF | | |
| | 24 °C | Temperature for heating OFF | Operation setup 10:34am,Mon<br>Heat OFF: Outdoor temp.<br>Range: (5℃~35℃)<br>Steps: ±1℃ 24 ℃<br>Select [↵] Confirm |
| | > △T for heating ON | | |
| | 5 °C | Set △T for heating ON.<br>* This setting will not available to set when pump flowrate set to Max. duty. | Operation setup 10:34am,Mon<br>Heat ON: ΔT<br>Range: (1℃~15℃)<br>Steps: ±1℃ 5 ℃<br>Select [↵] Confirm |
| | > Heater ON/OFF | | |
| | > Heater ON/OFF > Outdoor temp. for heater ON | | |
| | 0 °C | Temperature for heater ON | Operation setup 10:34am,Mon<br>Heater ON: Outdoor temp.<br>Range: (-20℃~15℃)<br>Steps: ±1℃ 0 ℃<br>Select [↵] Confirm |
| | > Heater ON/OFF > Delay time for heater ON | | |
| | 0:30 min | Delay time for heater to turn on | Operation setup 10:34am,Mon<br>Heater ON: Delay time<br>Range: (0:10~1:00)<br>Steps: ±0:10 0:30<br>Select [↵] Confirm |
| | > Heater ON/OFF > Water temperature for heater ON | | |
| | -4 °C | Setting of water temperature to turn on from water set temperature. | Operation setup 10:34am,Mon<br>Heater ON: ΔT of target Temp.<br>Range: (-10℃~-2℃)<br>Steps: ±1℃ -4 ℃<br>Select [↵] Confirm |
| | > Heater ON/OFF > Water temperature for heater OFF | | |
| | -2 °C | Setting of water temperature to turn off from water set temperature. | Operation setup 10:34am,Mon<br>Heater OFF: ΔT of target Temp.<br>Range: (-8℃~0℃)<br>Steps: ±1℃ -2 ℃<br>Select [↵] Confirm |
| **6.2** > *1, *2 Cool | | | |
| To set various water & ambient temperatures for cooling. | Water temperatures for cooling ON and △T for cooling ON. | | Operation setup 10:34am,Mon<br>Cool<br>Water temp. for cooling ON<br>ΔT for cooling ON<br>Select [↵] Confirm |

*1 The system is locked to operate without COOL mode. It can be unlocked only by authorised installers or our authorised service partners.
*2 Only displayed when COOL mode is unlocked (This means when COOL mode is available).

| Menu | Default Setting | Setting Options / Display | |
|---|---|---|---|
| | **> Water temp. for cooling ON** | | |
| | Compensation curve | Cooling ON temperatures in compensation curve or direct input. | Operation setup 10:34am,Mon<br>Cool ON: Water temp.<br>Compensation curve<br>Direct<br>Select [↵] Confirm |
| | **> Water temp. for cooling ON > Compensation curve** | | |
| | X axis: 20 °C, 30 °C<br>Y axis: 15 °C, 10 °C | Input the 4 temperature points (2 on horizontal X axis, 2 on vertical Y axis) | Cool ON: Water temp: Zone1<br>15℃ 10℃ 20 5 15 20℃ 30℃ 30<br>Select [↵] Confirm |
| | • If 2 zone system is selected, the 4 temperature points must also be input for Zone 2.<br>• “Zone 1” and “Zone 2” will not appear on the display if only 1 zone system. | | |
| | **> Water temp. for cooling ON > Direct** | | |
| | 10 °C | Set temperature for Cooling ON | Operation setup 10:34am,Mon<br>Cool ON: Water temp.: Zone2<br>Range: (5℃~20℃)<br>Steps: ±1℃ 10 ℃<br>Select [↵] Confirm |
| | • If 2 zone system is selected, temperature set point must input for Zone 2.<br>• “Zone 1” and “Zone 2” will not appear on the display if only 1 zone system. | | |
| | **> △T for cooling ON** | | |
| | 5 °C | Set △T for cooling ON<br>* This setting will not available to set when pump flowrate set to Max. duty. | Operation setup 10:34am,Mon<br>Cool ON: ΔT<br>Range: (1℃~15℃)<br>Steps: ±1℃ 5 ℃<br>Select [↵] Confirm |
| **6.3** | **> *1, *2 Auto** | | |
| Automatic switch from Heat to Cool or Cool to Heat. | Outdoor temperatures for switching from Heat to Cool or Cool to Heat.<br><br>Outdoor temp. for (Heat to Cool) / Outdoor temp. for (Cool to Heat) | | Operation setup 10:34am,Mon<br>Auto<br>Outdoor temp. for (Heat to Cool)<br>Outdoor temp. for (Cool to Heat)<br>Select [↵] Confirm |
| | **> Outdoor temp. for (Heat to Cool)** | | |
| | 15 °C | Set outdoor temperature for switching from Heat to Cool. | Operation setup 10:34am,Mon<br>Auto: Outdoor temp.(Heat to Cool)<br>Range: (11℃~25℃)<br>Steps: ±1℃ 15 ℃<br>Select [↵] Confirm |

*1 The system is locked to operate without COOL mode. It can be unlocked only by authorised installers or our authorised service partners.
*2 Only displayed when COOL mode is unlocked (This means when COOL mode is available).

| Menu | Default Setting | Setting Options / Display | |
|---|---|---|---|
| | > Outdoor temp. for (Cool to Heat) | | |
| | 10 °C | Set outdoor temperature for switching from Cool to Heat. | Operation setup 10:34am,Mon<br>Auto: Outdoor temp.(Cool to Heat)<br>Range: (5℃~14℃)<br>Steps: ±1℃ 10 ℃<br>Select [↵] Confirm |
| **6.4** > *1 Tank<br>Setting functions for the tank. | | | |
| | Floor operation time (max) / Tank heat up time (max) / Tank re-heat temp. / Sterilization | | Operation setup 10:34am,Mon<br>Tank<br>Floor operation time (max)<br>Tank heat up time (max)<br>Tank re-heat temp.<br>Select [↵] Confirm |
| | • The display will show 3 functions at a time. | | |
| | > Floor operation time (max) | | |
| | 8:00 | Maximum time for floor operation (in hours and minutes) | Operation setup 10:34am,Mon<br>Tank: Floor ope. time (max)<br>Range: (0:30~10:00)<br>Steps: ±0:30 8:00<br>Select [↵] Confirm |
| | > Tank heat up time (max) | | |
| | 1:00 | Maximum time for heating the tank (in hours and minutes) | Operation setup 10:34am,Mon<br>Tank: Heat up time (max)<br>Range: (0:05~4:00)<br>Steps: ±0:05 1:00<br>Select [↵] Confirm |
| | > Tank re-heat temp. | | |
| | -8 °C | Set temperature to perform reboil of tank water. | Operation setup 10:34am,Mon<br>Tank: Re-heat temp.<br>Range: (-12℃~-2℃)<br>Steps: ±1℃ -8 ℃<br>Select [↵] Confirm |
| | > Sterilization | | |
| | Monday | Sterilization may be set for 1 or more days of the week.<br>Sun / Mon / Tue / Wed / Thu / Fri / Sat | Operation setup 10:34am,Mon<br>Sterilization: Day<br>Sun Mon Tue Wed Thu Fri Sat<br>— ✓ — — — — —<br>Day ☑/⊟ [↵] Confirm |
| | > Sterilization: Time | | |
| | 12:00 | Time of the selected day(s) of the week to sterilize the tank<br>0:00 ~ 23:59 | Operation setup 10:34am,Mon<br>Sterilization: Time<br>12 : 00 pm<br>Select [↵] Confirm |

*1 Only displayed when Tank connection is Yes.

| Menu | Default Setting | Setting Options / Display | |
|---|---|---|---|
| | > Sterilization: Boiling temp. | | |
| | 65 °C | Set boiling temperatures for sterilize the tank. | Operation setup 10:34am,Mon<br>Sterilization: Boiling temp.<br>Range: (55℃~65℃)<br>Steps: ±1℃ 65 ℃<br>Select [↵] Confirm |
| | > Sterilization: Ope. time (max) | | |
| | 0:10 | Set sterilizing time (in hours and minutes) | Operation setup 10:34am,Mon<br>Sterilization: Ope. time (max)<br>Range: (0:05~1:00)<br>Steps: ±0:05 0:10<br>Select [↵] Confirm |

| 7 | Installer setup > Service setup | | |
|---|---|---|---|
| 7.1 | > Pump maximum speed | | |
| | To set the maximum speed of the pump. | Setting the flow rate, max. duty and operation ON/OFF of the pump.<br><br>Flow rate: XX:X L/min<br>Max. Duty: 0x40 ~ 0xFE,<br>Pump: ON/OFF/Air Purge | Service setup 10:34am,Mon<br>Flow rate Max. Duty Operation<br>0.0 L/min 0xCE Air Purge<br>Select |
| 7.2 | > Dry concrete | | |
| | To dry the concrete (floor, walls, etc.) during construction.<br><br>Do not use this menu for any other purposes and in period other than during construction | Edit to set the temperature of dry concrete.<br><br>ON / Edit | Service setup 10:34am,Mon<br>Dry concrete<br>ON<br>Edit<br>Select [↵] Confirm |
| | > Edit | | |
| | | Stages: 1<br>Temperature: 25 °C | Heating temperature for drying the concrete.<br>Select the desired stages: 1 ~ 10, range: 1 ~ 99 | Service setup 10:34am,Mon<br>Dry concrete: 1/10<br>Range: (25℃~55℃)<br>Steps: ±1℃ 25 ℃<br>Select [↵] Confirm |
| | > ON | | |
| | | Confirm the setting temperatures of dry concrete for each stage. | Service setup 10:34am,Mon<br>Dry concrete: Status<br>Stage : 1/10<br>Water set temp. : 25℃<br>Actual water temp. :25℃/25℃<br>[⏻] OFF |

| Menu | Default Setting | Setting Options / Display |
|---|---|---|
| **7.3 > Service contact** | | |
| To set up to 2 contact names and numbers for the User. | Service engineer's name and contact number.<br><br>Contact 1 / Contact 2 | Service setup 10:34am,Mon<br>Service contact:<br>Contact 1<br>Contact 2<br>Select [↵]Confirm |
| | **> Contact 1 / Contact 2** | |
| | Contact name or number.<br><br>Name / phone icon | Service contact 10:34am,Mon<br>Contact 1<br>Name : Bryan Adams<br>: 08812345678<br>Select [↵]Edit |
| | Input name and number<br><br>Contact name: alphabet a ~ z.<br>Contact number: 1 ~ 9 | Contact-1<br>ABC/abc 0-9/Other<br>ABCDEFGHIJKLMNOPQR Space<br>STUVWXYZ abcdefghi BS<br>jklmnopqrstuvwxyz Conf<br>Select [↵]Enter<br><br>Number:<br>1 2 3 (<br>4 5 6 )<br>7 8 9 - BS<br>* 0 # _ Conf<br>Select [↵]Enter |

| 8 Installer setup > Remote control setup | | | |
|---|---|---|---|
| • To select whether to use one remote controller or two remote controllers.<br>• Select Single when one remote controller is connected. Select Dual when two remote controllers are connected. Second remote controller can be used for zone 2 room temperature control. | Single | Selection of one or two remote controllers. | Single<br>▼<br>Dual |
| | | When Dual is selected, Main remote controller (RC-1) will start to communicate with second remote controller (RC-2) and display "RC-1 & RC-2 sync. in progress". They are ready to be used after this pop up screen disappears. | RC-1 & RC-2<br>sync. in progress! |
| | | When both remote controllers have communication failure, it will display "Communication with RC-2 failed". | Communication with<br>RC-2 failed!<br><br>[⇦]Close |

### 5.1.7 Main Components

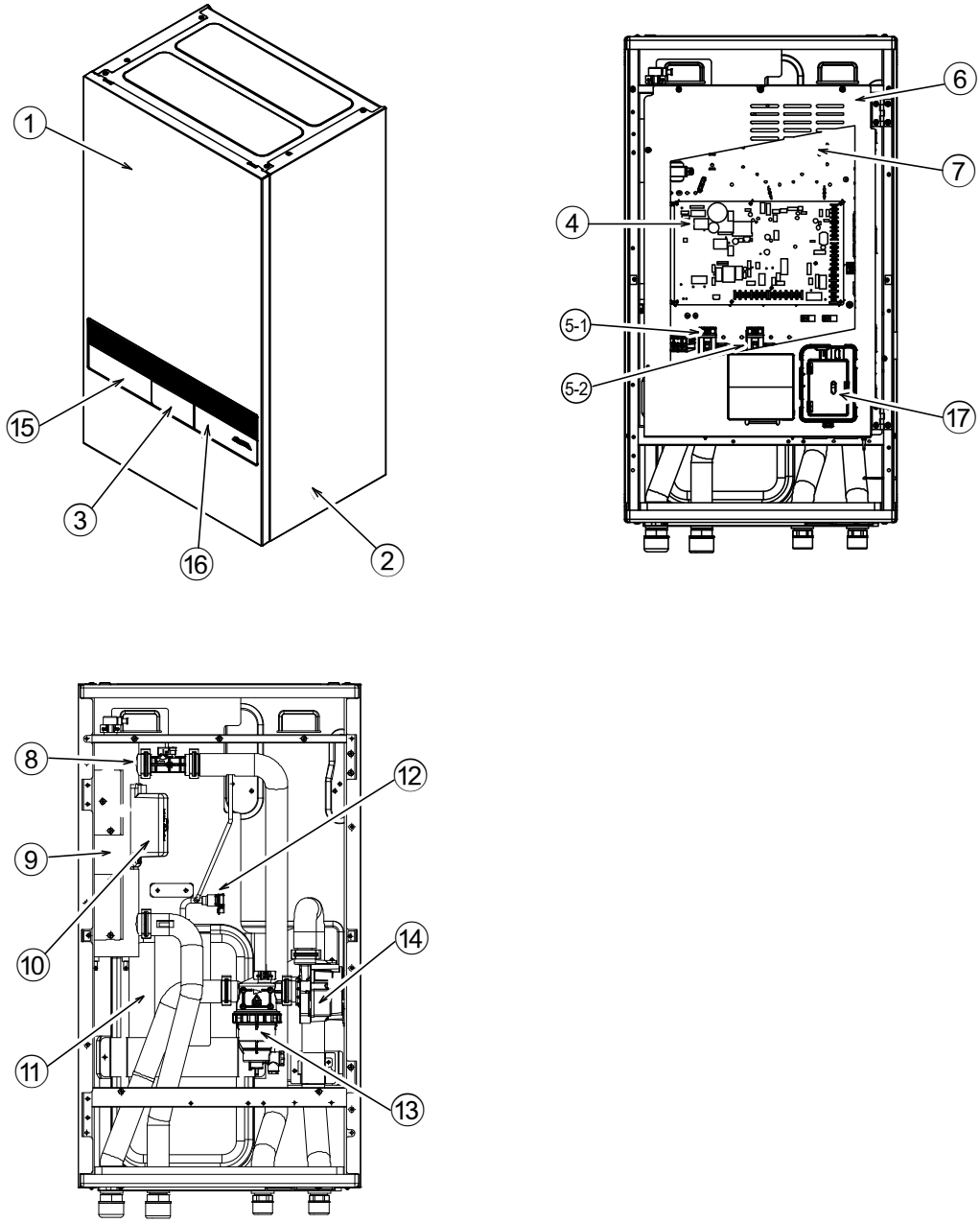


① Cabinet front plate
② Cabinet side plate (2 pieces)
③ Remote controller
④ PCB
⑤-1 Single Phase RCCB/ELCB (Main Power)
⑤-2 Single Phase RCCB/ELCB (Backup Heater)
⑥ Control board cover
⑦ Control board
⑧ Flow sensor
⑨ Backup heater
⑩ Overload protector
⑪ Expansion vessel
⑫ Water pressure sensor
⑬ Magnetic water filter set
⑭ Water pump
⑮ Left Decoration Panel
⑯ Right Decoration Panel
⑰ Network Adaptor Holder

## 5.2 Outdoor Unit

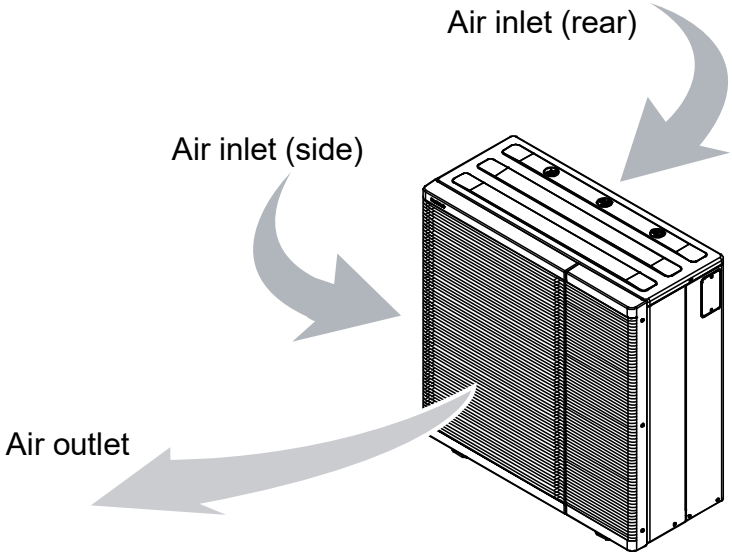

# 6. Dimensions

## *6.1 Indoor Unit*

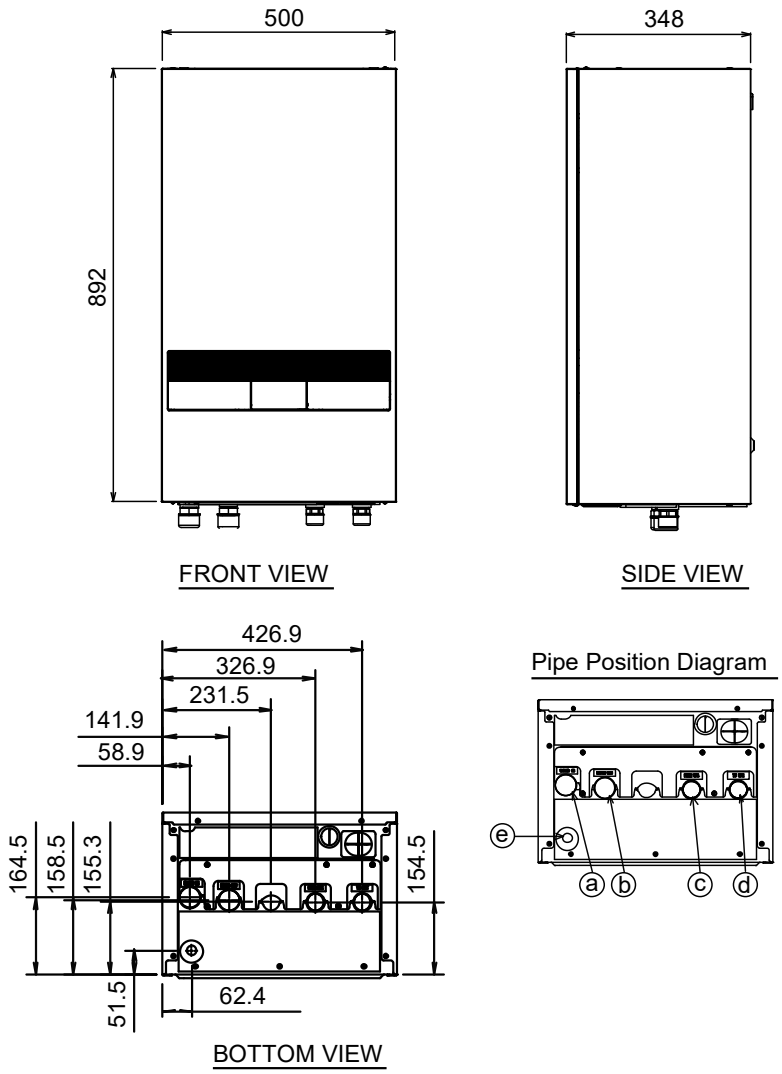


| Letter | Pipe Description | Connection Size |
|---|---|---|
| | | WH-SDC** |
| ⓐ | Water inlet | R 1¼" |
| ⓑ | Water outlet | R 1¼" |
| ⓒ | Water inlet ( From Outdoor Unit) | R1" |
| ⓓ | Water outlet (To Outdoor Unit) | R1" |
| ⓔ | Drain water hole | |

Unit: mm

## 6.2 Outdoor Unit

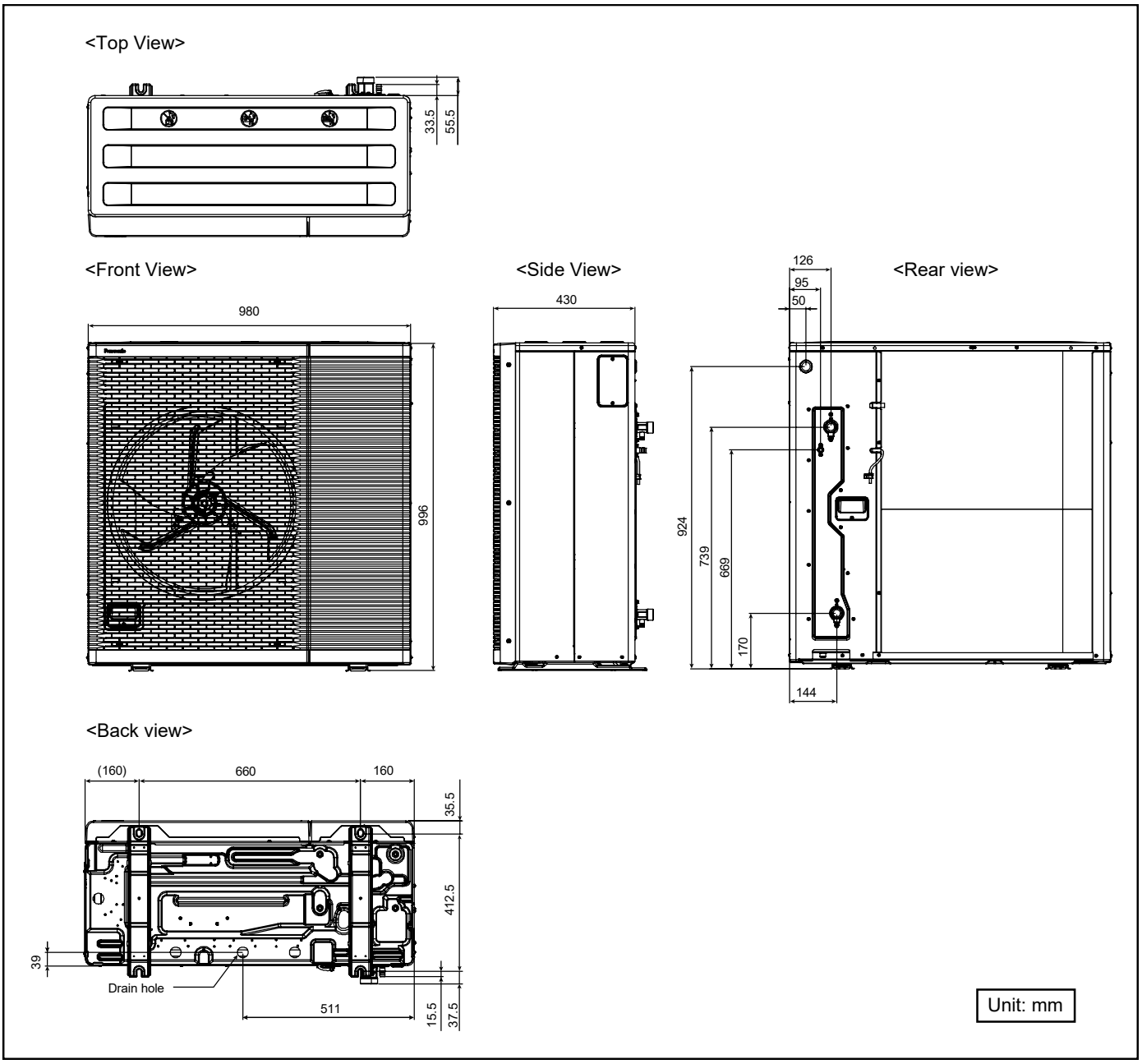

# 7. Refrigeration and Water Cycle Diagram

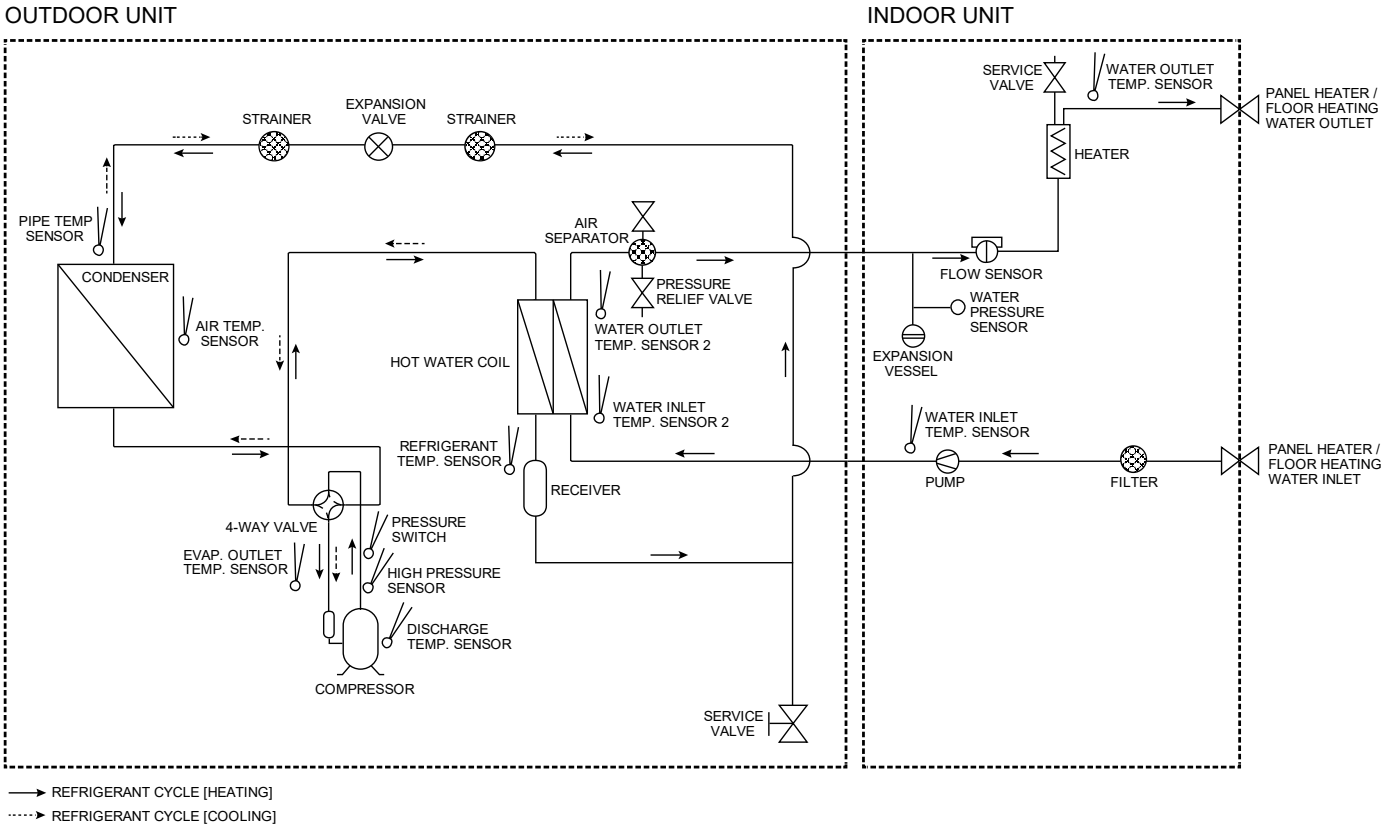

# 8. Block Diagram

## *8.1 WH-SDC0509L3E5*

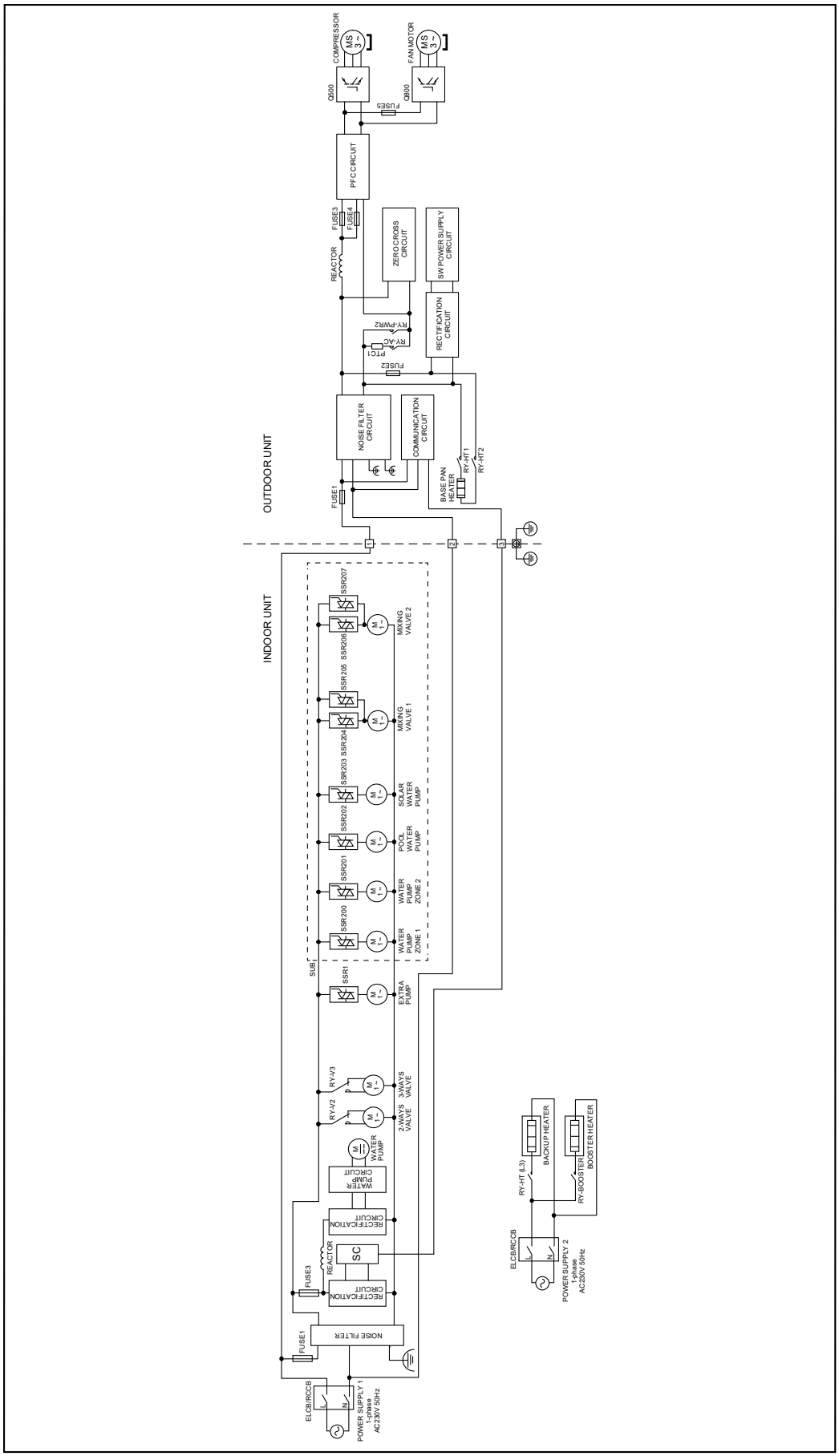

## 8.2 WH-SDC0509L6E5

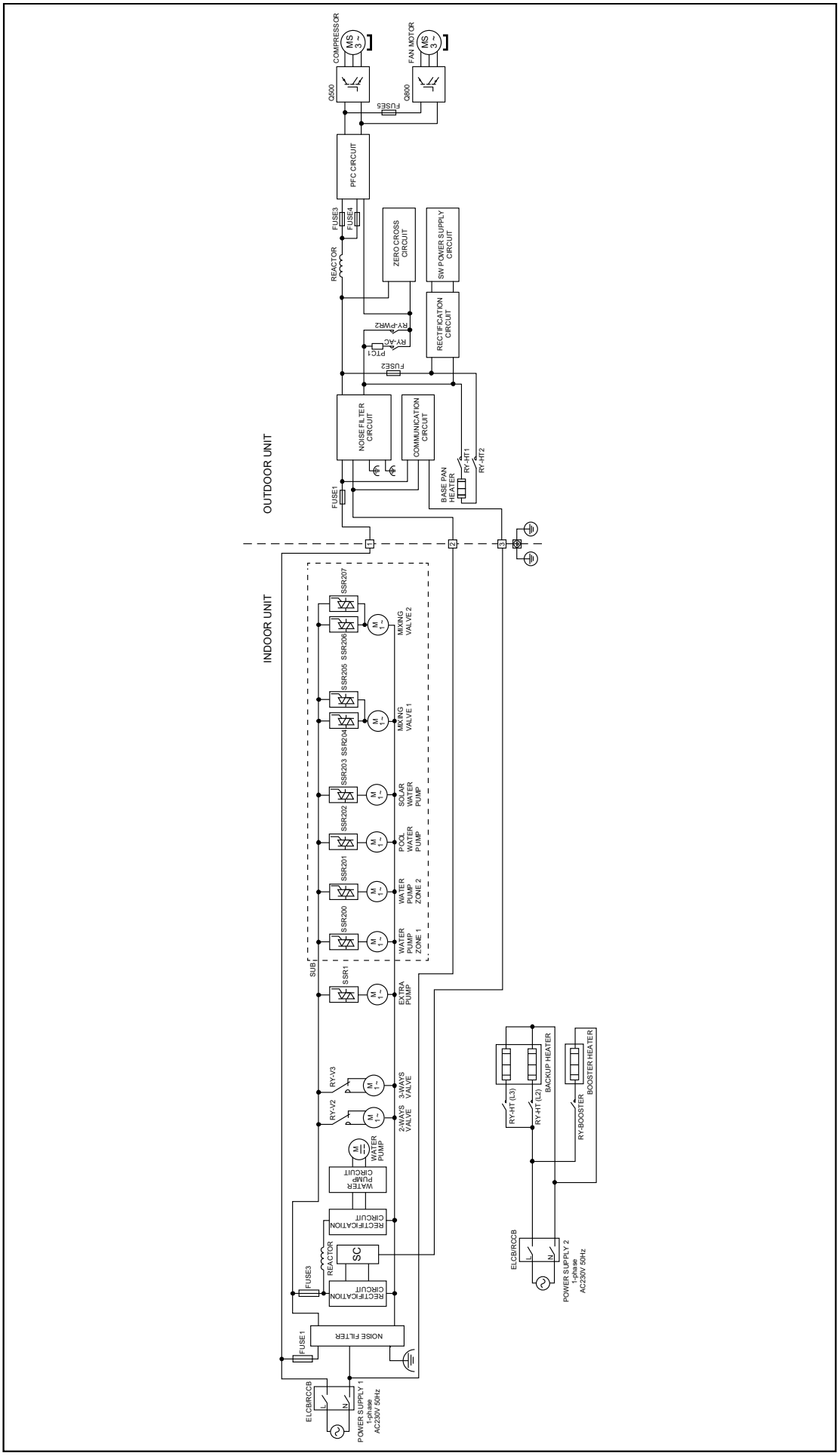

# 9. Wiring Connection Diagram

## *9.1 Indoor Unit*

### 9.1.1 WH-SDC0509L3E5

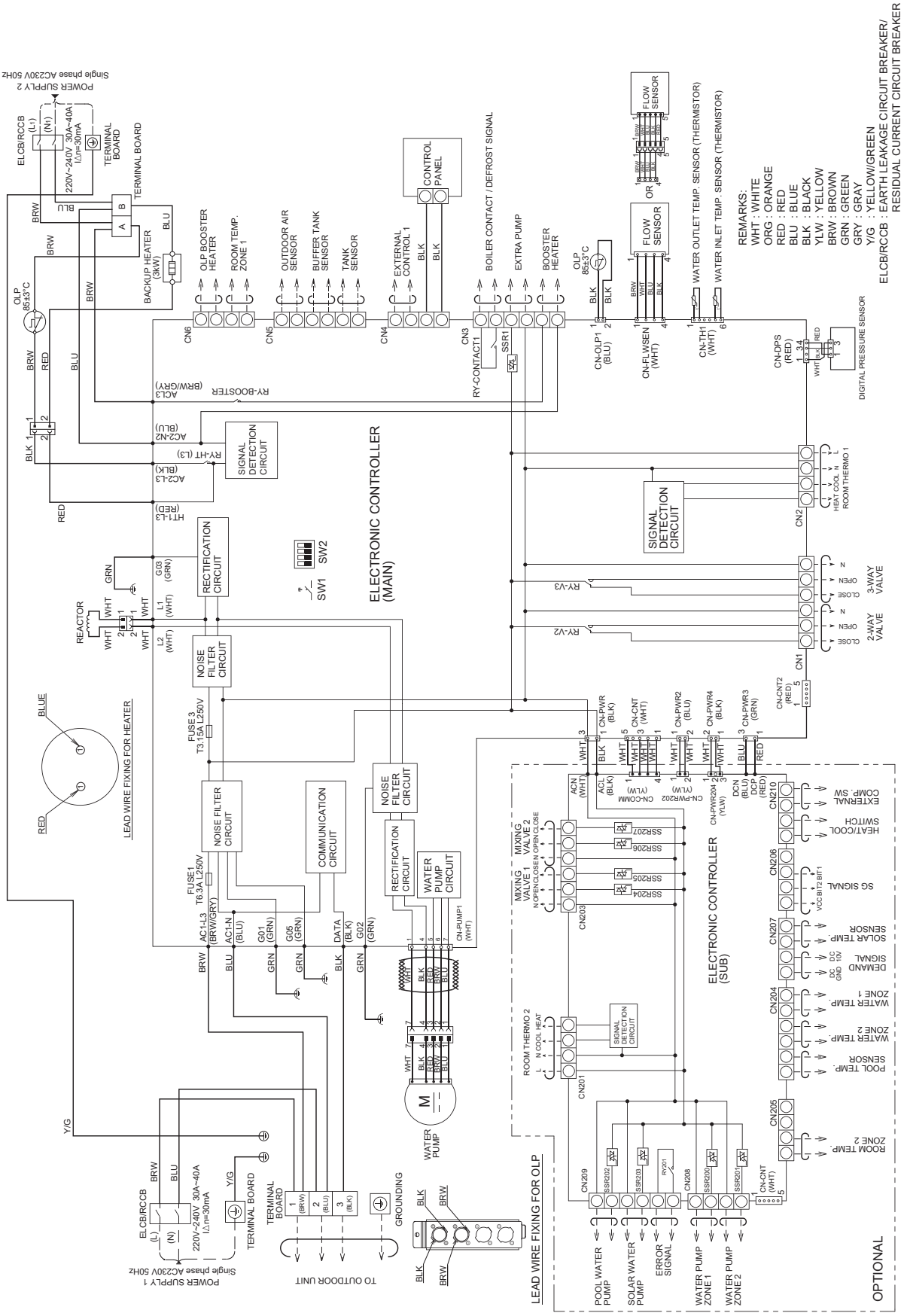

## 9.1.2 WH-SDC0509L6E5

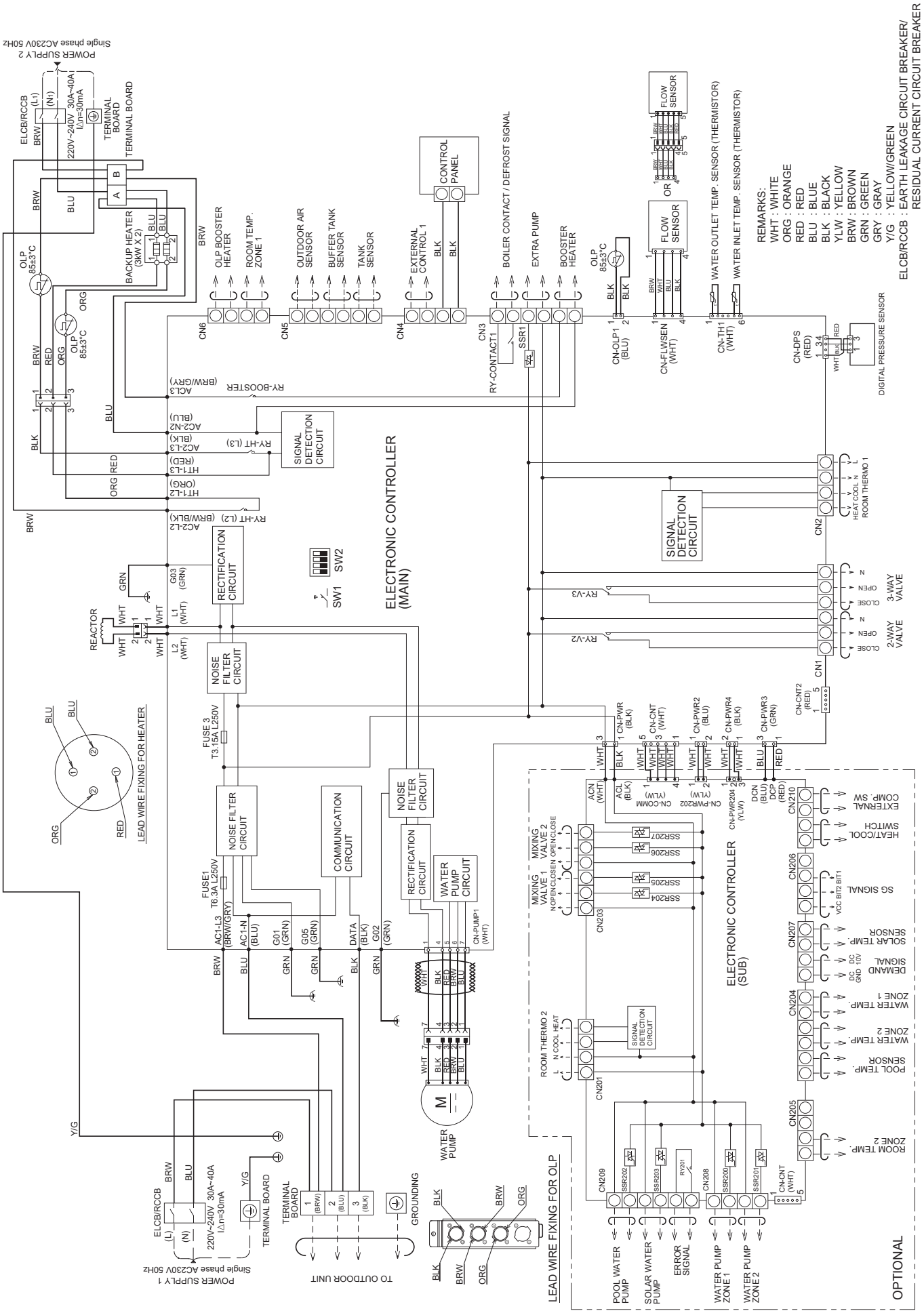

## 9.2 Outdoor Unit

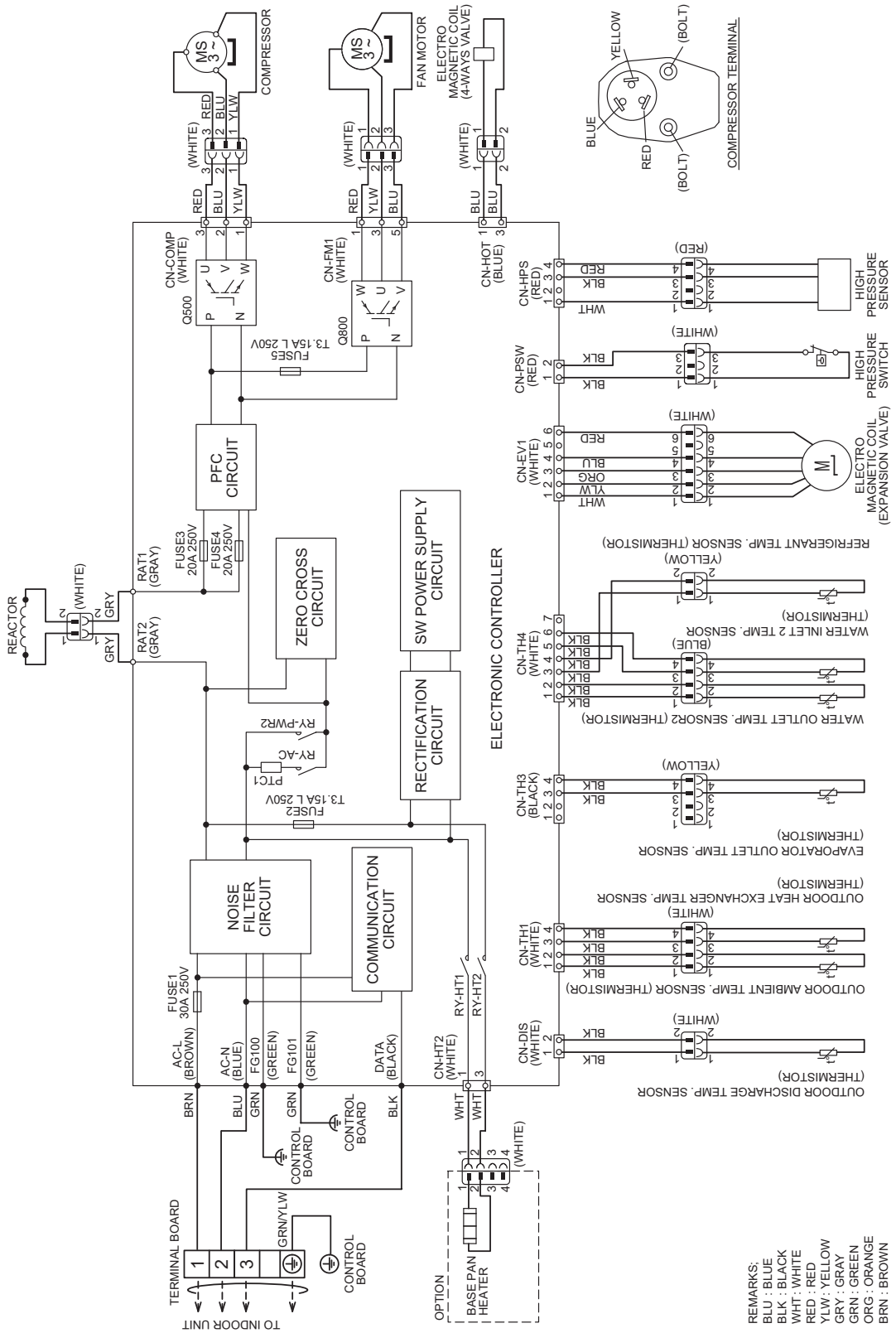


Resistance of Compressor Windings

| MODEL | WH-WDG05LE5 / WH-WDG07LE5 / WH-WDG09LE5 |
|---|---|
| CONNECTION | 7JD420XAA62 |
| U - V | 0.435 Ω |
| V - W | 0.441 Ω |
| U - W | 0.452 Ω |

Note: Resistance at 20°C of ambient temperature.

# 10. Electronic Circuit Diagram

## *10.1 Indoor Unit*

### 10.1.1 WH-SDC0509L3E5

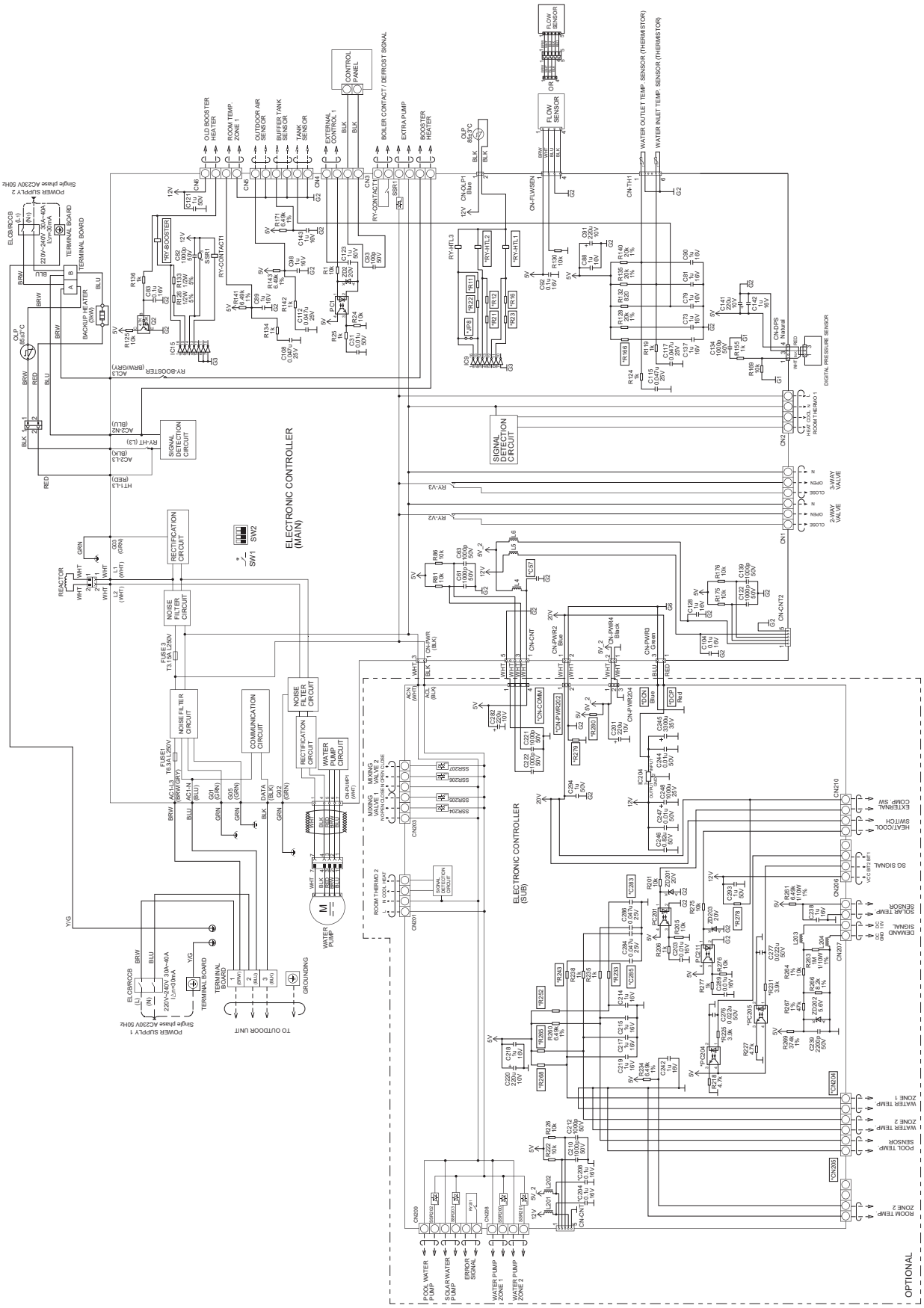

## 10.1.2 WH-SDC0509L6E5

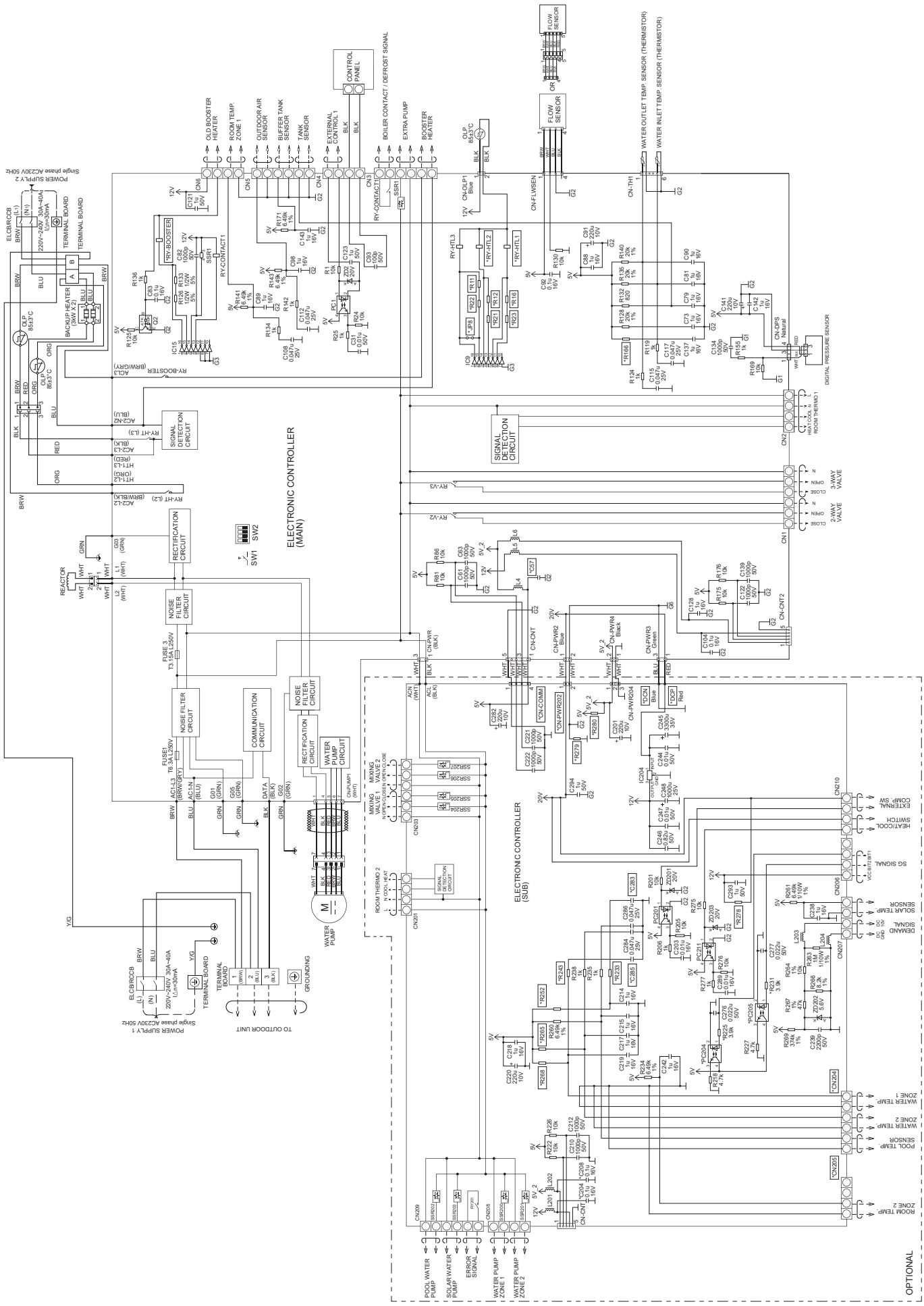

## 10.2 Outdoor Unit

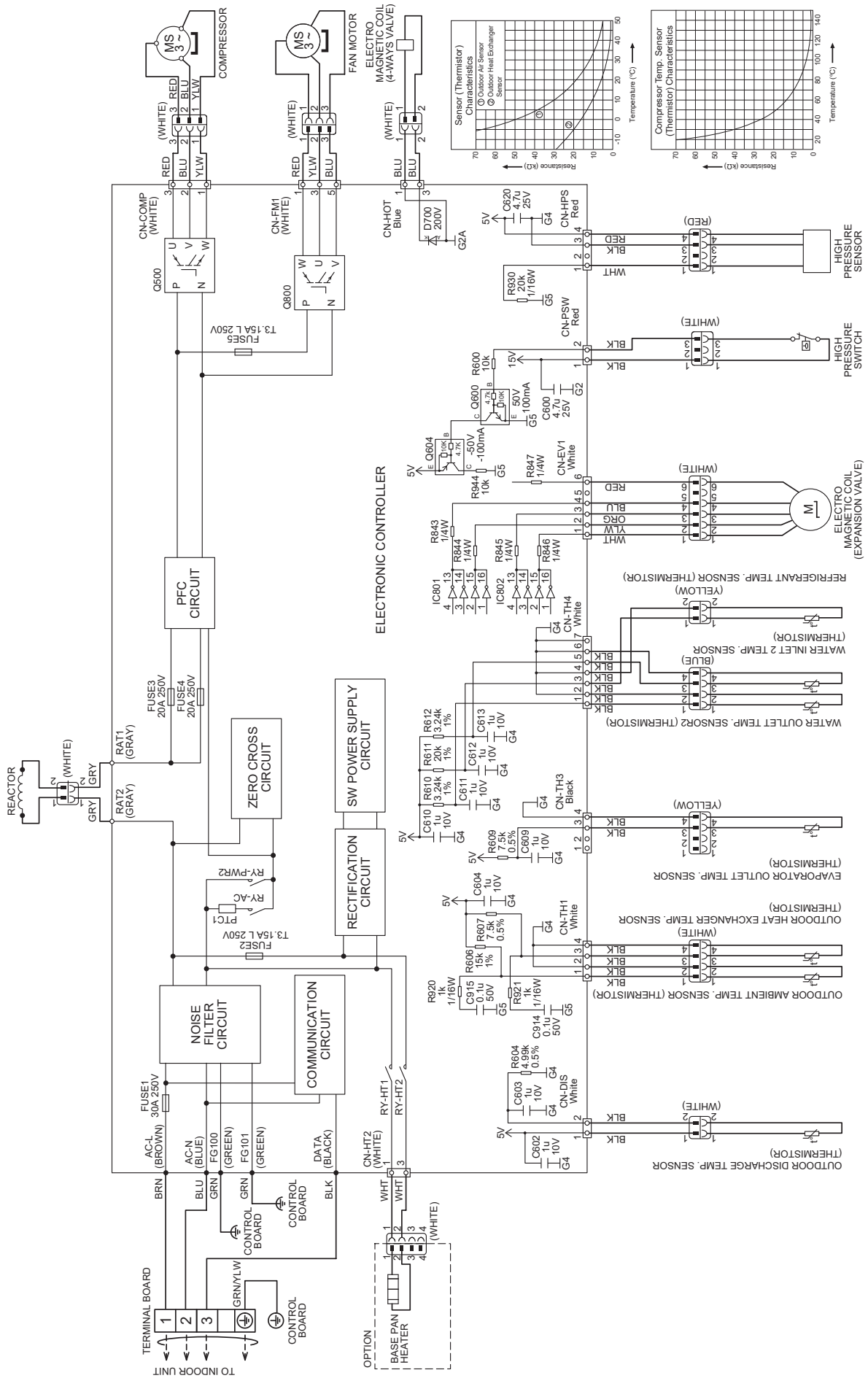

# 11. Printed Circuit Board

## *11.1 Indoor Unit*

### 11.1.1 Main Printed Circuit Board

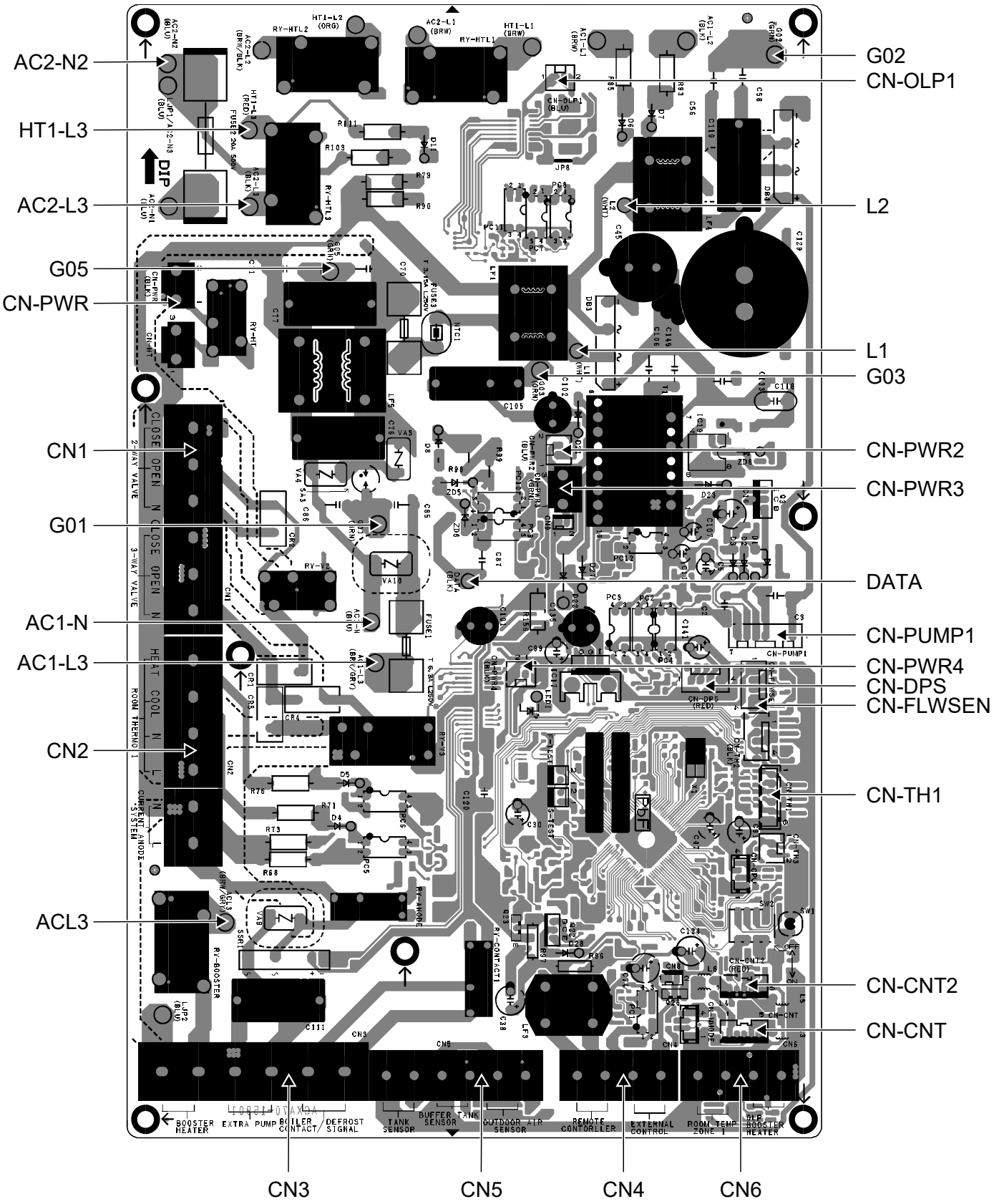

## 11.1.2 Sub Printed Circuit Board (Optional)

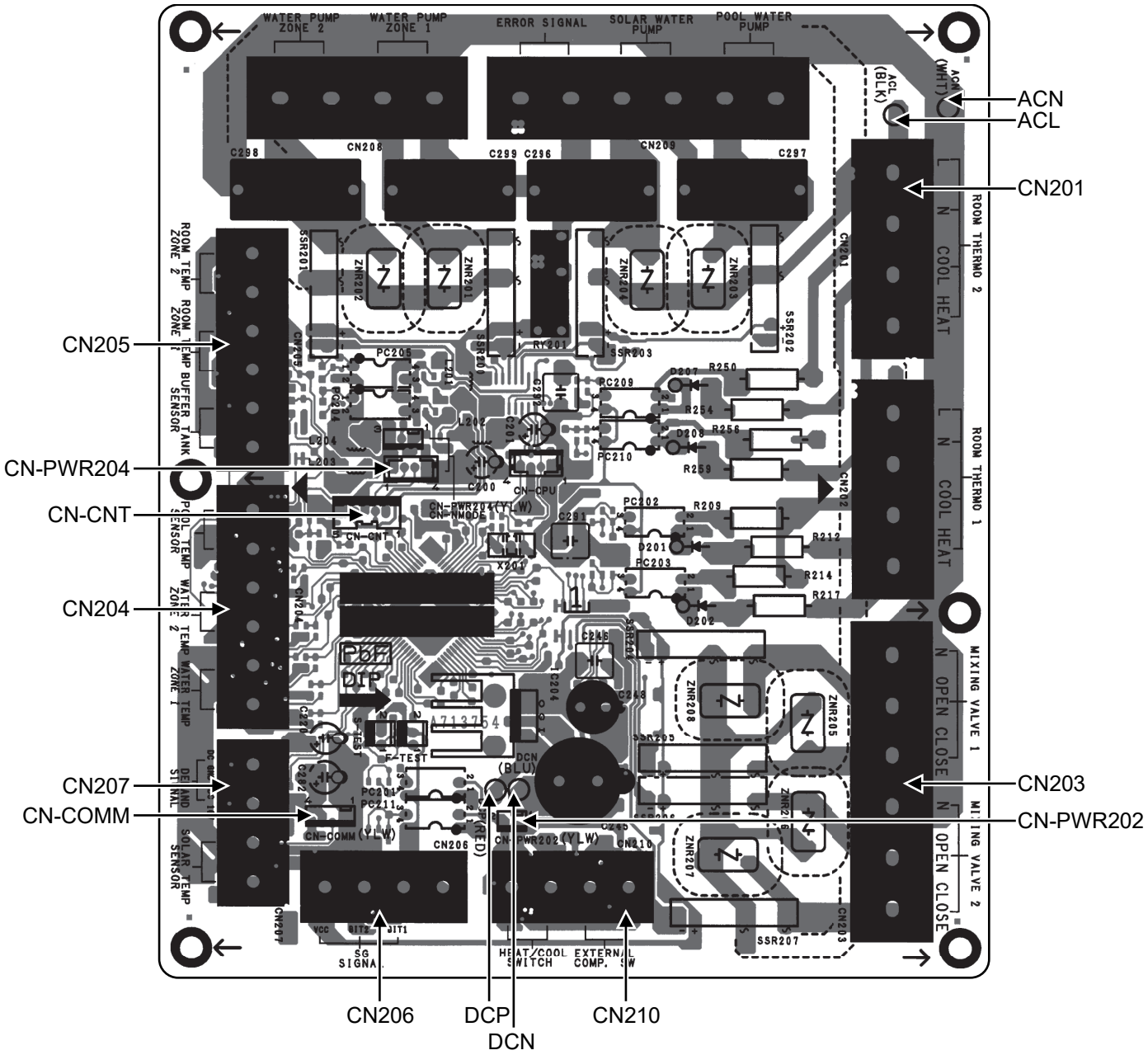

## 11.2 Outdoor Unit

### 11.2.1 Main Printed Circuit Board

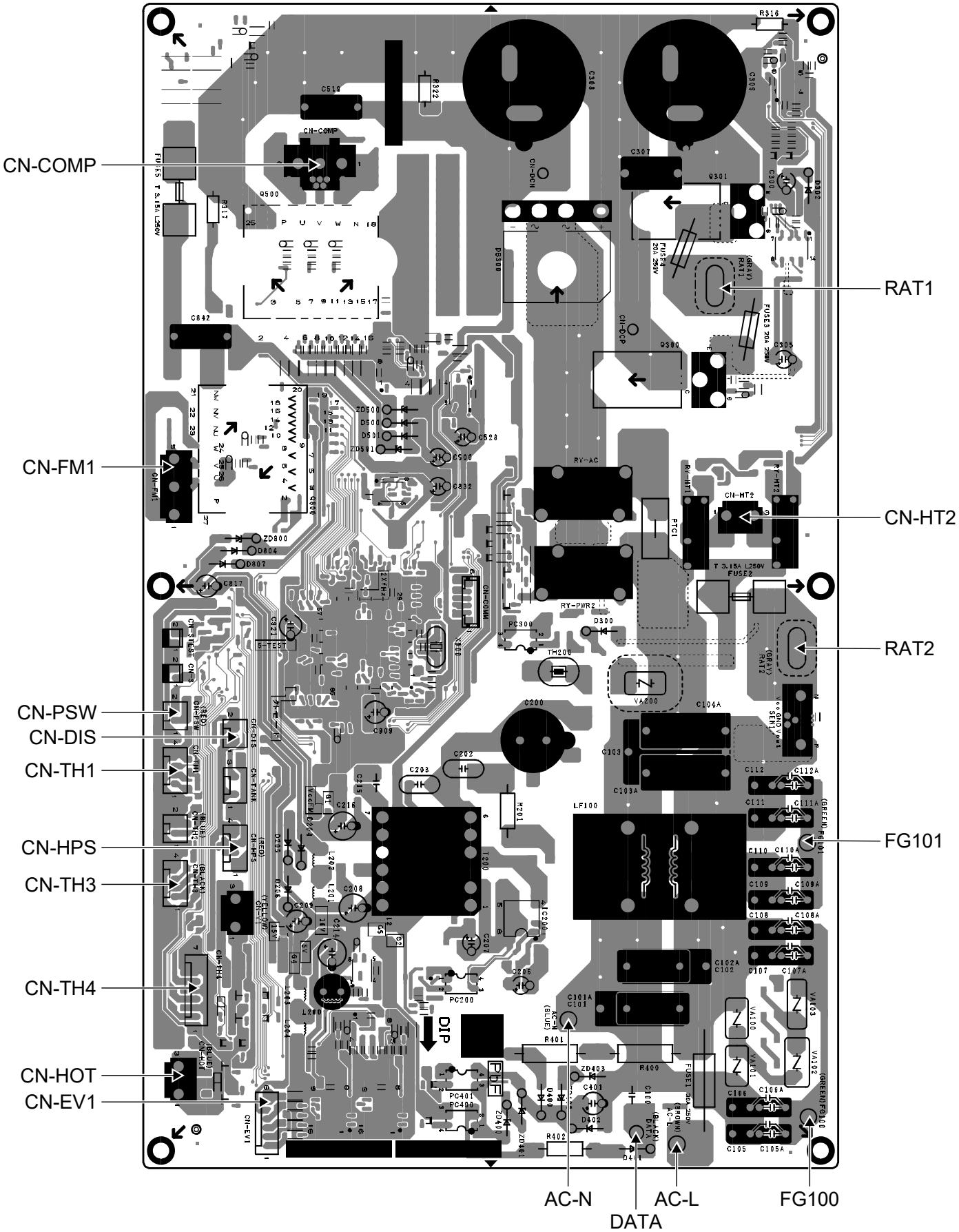

# 12. Installation Instruction

### Attached Accessories

| No. | Accessories part | Qty. | No. | Accessories part | Qty. |
|---|---|---|---|---|---|
| 1 | Installation plate | 1 | 4 | Installation plate | 1 |
| 2 | Drain elbow | 1 | 5 | Screw | 3 |
| 3 | Packing for Drain | 1 | 6 | Network Adaptor (CZ-TAW1B) | 1 |

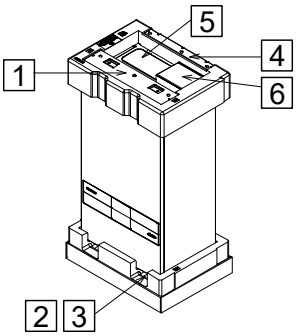


### Optional Accessories

| No. | Accessories part | Qty. |
|---|---|---|
| 7 | Remote Controller Case | 1 |
| 8 | Extension Cable (CZ-TAW1-CBL) | 1 |
| 9 | Optional PCB (CZ-NS5P) | 1 |

### Field Supply Accessories (Optional)

| No. | Part | | Model | Specification | Maker |
|---|---|---|---|---|---|
| i | 2-way valve kit *Cooling model | Electromotoric Actuator | SFA21/18 | AC230V, 12 VA | Siemens |
| | | 2-port Valve | VXI46/25 | - | Siemens |
| ii | 3-way valve kit | Electromotoric Actuator | SFA21/18 | AC230V, 12 VA | Siemens |
| | | 3-port Valve | VVI46/25 | - | Siemens |
| iii | Room thermostat | Wired | PAW-A2W-RTWIRED | AC230V | - |
| | | Wireless | PAW-A2W-RTWIRELESS | | |
| | | | | | |
| v | Pump | - | Yonos Pico 1.0 25/1-8 | AC 230V, 0.6 A max | Wilo |
| vi | Buffer tank sensor | - | PAW-A2W-TSBU | - | - |
| vii | Outdoor sensor | - | PAW-A2W-TSOD | - | - |
| viii | Zone water sensor | - | PAW-A2W-TSHC | - | - |
| ix | Zone room sensor | - | PAW-A2W-TSRT | - | - |
| x | Solar sensor | - | PAW-A2W-TSSO | - | - |

- It is recommended to purchase the field supply accessories listed in above table.

## 12.1 Indoor Unit

### 12.1.1 Select the Best Location

Before choosing the installation site, obtain user approval.

- There should not be any heat source or steam near the Indoor Unit.
- A place where air circulation in the room is good.
- A place where drainage can be easily done (e.g. Utility room).
- A place where Indoor Unit's operation noise will not cause discomfort to the user.
- A place where Indoor Unit is far from door way.
- Ensure to keep minimum distance of spaces as illustrated below from wall, ceiling, or other obstacles.
- A place where flammable gas leaking might not occur.
- Recommended installation height for Indoor Unit shall be at least 1150 mm.
- Must install on a vertical wall.
- When install electrical equipment at wooden building of metal lath or wire lath, according to electrical facility technical standard, no electrical contact between equipment and building is allowed. Insulator must be installed in between.
- Do not install the unit at outdoor. This is designed for indoor installation only.

#### *12.1.1.1 Required Space for Installation*

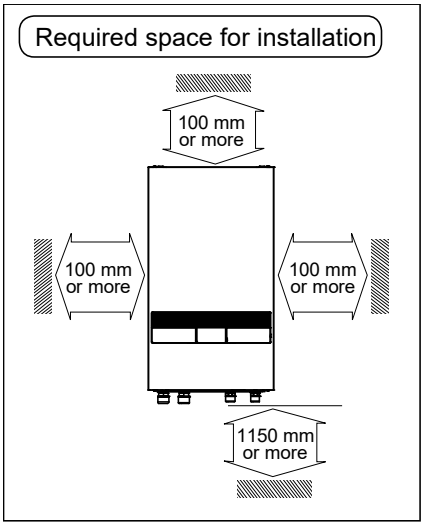


### 12.1.2 How to Fix Installation Plate

The mounting wall is strong and solid enough to prevent it from vibration

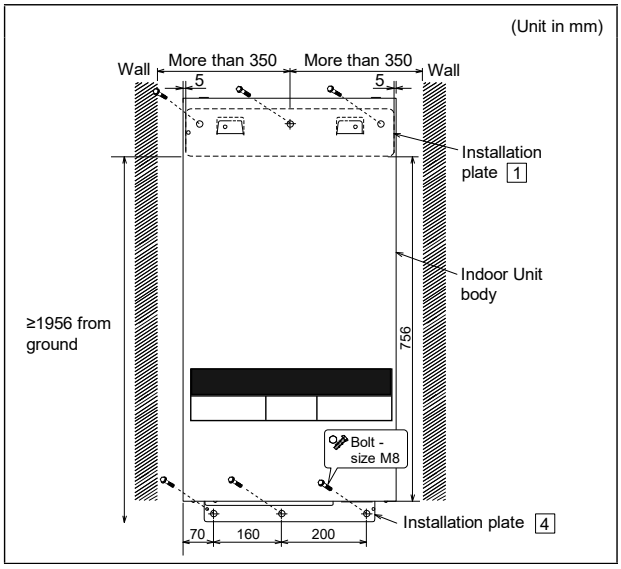


The centre of installation plate should be at more than 350 mm at right and left of the wall.
The distance from installation plate edge to ground should more than 1956 mm.

- Always mount the installation plate horizontally plate by aligning the marking thread and using a level gauge.
- Mount the installation plate on the wall with 6 sets of plug, bolt and washer (all non-supply) with size M8.

### 12.1.3 To Drill a Hole in the Wall and Install a Sleeve of Piping

1. Make a through hole. (Check pipe diameter and insulation thickness)
2. Insert the piping sleeve to the hole.
3. Fix the bushing to the sleeve.
4. Cut the sleeve until it extrudes about 15 mm from the wall.

| ⚠ CAUTION |
|---|
| ❗ When the wall is hollow, please be sure to use the sleeve for tube assembly to prevent dangers caused by mice biting the connection cable. |

5. Finish by sealing the sleeve with putty or caulking compound at the final stage.

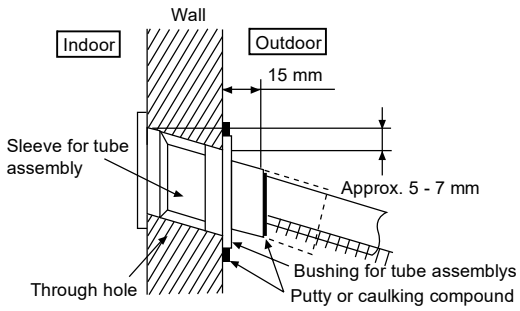

## 12.1.4 Indoor Unit Installation

| ⚠ WARNING |
| --- |
| This section is for authorized and licensed electrician/water system installer only. Work behind the front plate secured by screws must only be carried out under supervision of qualified contractor, installation engineer or service person. |

### *12.1.4.1 Access to Internal Components*

Please follow the steps below for take out front plate. Before removing the front plate of Indoor Unit, always switch off all power supply (i.e. Indoor Unit power supply, heater power supply).

1. Remove the 2 mounting screws which located at bottom of the front plate.
2. Gently pull the lower section of the front plate towards you to remove the front plate from left and right hooks.
3. Hold the left edge and right edge of front plate to lift up front plate from hooks.

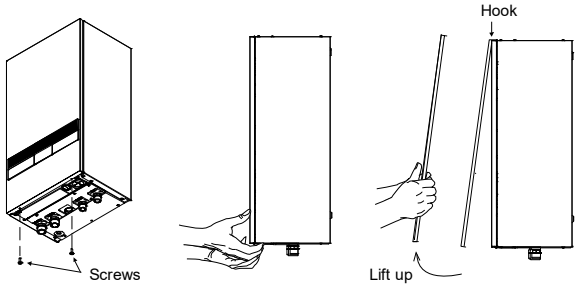


### *12.1.4.2 Install the Indoor Unit*

1. Engage the slots on the Indoor Unit to the hooks of installation plate 1 . Ensure the hooks are properly seated on the installation plate by moving it left and right.
2. Fix the screws 5 to the holes on the hooks of installation plate 4 , as illustrated below.

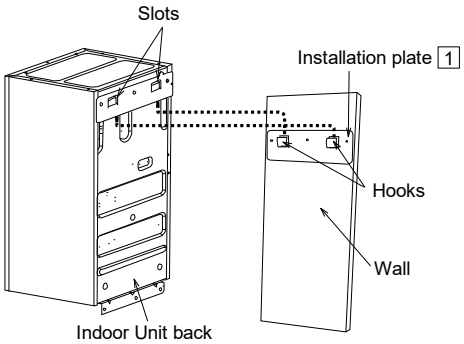


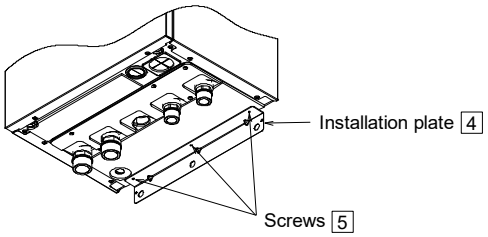


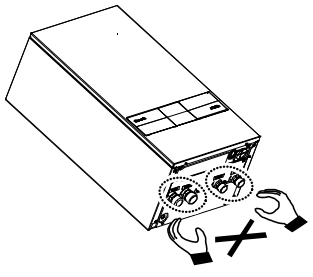


### *12.1.4.3 Typical Piping Installation*

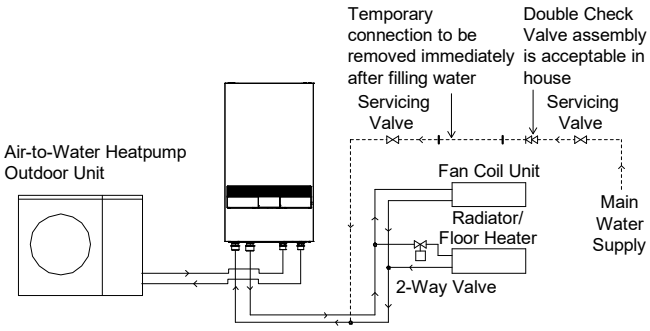


### *12.1.4.4 Water Piping Installation*

- Please engage a licensed water circuit installer to install this water circuit.
- This water circuit must comply with relevant European and national regulations (including EN61770), and local building regulation codes.
- Ensure the components installed in the water circuit could withstand water pressure during operation.
- Do not use worn out tube or detachable hose-set.
- Do not apply excessive force to pipes that may damage the pipes.
- Choose proper sealer which can withstand the pressures and temperatures of the system.
- Make sure to use two spanners to tighten the connection. Further tighten the nuts with torque wrench in specified torque as stated in the table.
- Cover the pipe end to prevent dirt and dust when inserting it through a wall.
- If non-brass metallic piping is used for installation, make sure to insulate the pipes to prevent galvanic corrosion.
- Do not connect galvanised pipes, this will cause galvanic corrosion.
- Use correct nut for all Indoor Unit tube connections and clean all tubes with tap water before installation. See Tube Position Diagram for detail.

| Tube Connector | Nut Size | Torque |
|---|---|---|
| ⓐ & ⓑ | RP 1¼" | 117.6 N•m |
| ⓒ & ⓓ | RP 1" | 88.2 N•m |

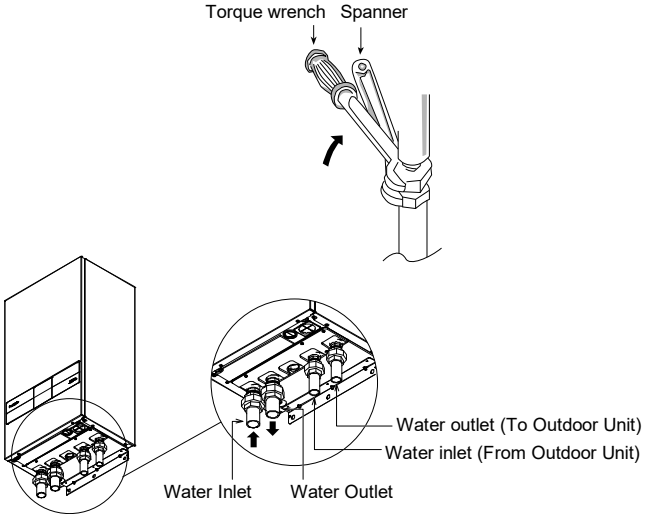


| ⚠ CAUTION |
|---|
| Do not over tighten, over tightening cause water leakage. |

- Make sure to insulate the water circuit pipes to prevent reduction of heating capacity.
- After installation, check the water leakage condition in connection area during test run.
- Failure to connect the tube appropriately might cause the Indoor Unit malfunction.
- Protection From Frost:
  If the Indoor Unit is being exposed to frost while power supply failure or pump operating failure, drain the system. When water is idle inside the system, freezing up is very likely to happen which could damage the system. Make sure the power supply is turned off before draining. Backup heater ⑨ may be damaged under dry heating.

**(A) Space Heating/Cooling Pipework**

- Connect Indoor Unit Tube Connector ⓐ to outlet connector of Zone 1 Panel/Floor heater.
- Connect Indoor Unit Tube Connector ⓑ to inlet connector of Zone 1 Panel/Floor heater.
- Failure to connect the tube appropriately might cause the Indoor Unit malfunction.
- Refer below table for the rated flow rate of each particular Outdoor Unit.

| Model | | Rated Flow Rate (l/min) | |
|---|---|---|---|
| | | Cool | Heat |
| WH-SDC0509L3E5, WH-SDC0509L6E5 | WH-WDG05LE5* | 14.3 | 14.3 |
| | WH-WDG07LE5* | 20.1 | 20.1 |
| | WH-WDG09LE5* | 23.5 | 25.8 |

*Do not install automatic air purge valves on indoor water pipes. In the unlikely event that the R290 refrigerant leaks into the water circuit, there is a risk that the refrigerant will leak indoors.

**(B) Circulating Pipework**

- Connect Indoor unit Tube Connector ⓓ to outdoor unit inlet water socket.
- Connect Indoor Unit Tube Connector ⓒ to outdoor unit outlet water socket.
- Failure to connect results in an error stop the system.

| Model | Water piping between outdoor unit and indoor unit | | | |
|---|---|---|---|---|
| | Inner diameter | Maximum length | Insulator thickness | Maximum Elevation |
| WH-WDG05LE5* | ø20 | 30 m | 30 mm or more | 10 m |
| WH-WDG07LE5* | ø25 | | | |
| WH-WDG09LE5* | | | | |

### *12.1.4.5 Drain Elbow and Hose Installation*

- Fix the drain elbow [2] and packing [3] to the bottom of Indoor Unit, as shown in below illustration.
- Use inner diameter 17 mm drain hose in the market.
- This hose must to be installed in a continuously downward direction and in a frost-free environment.
- Guides this hose's outlet to outdoor only.
- Do not insert this hose into sewage or drain pipe that may generate ammonia gas, sulfuric gas, etc.
- If necessary, use hose clamp to further tighten the hose at drain hose connector to prevent leakage.
- Water will drip from this hose, therefore the outlet of this hose must be installed in an area where the outlet cannot become blocked.
- If drain hose is in the room (where dew may form), please increase the insulation by using POLY-E FOAM with thickness 6 mm or above.

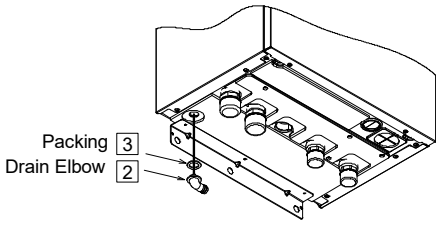

## 12.1.5 Connect the Cable to the Indoor Unit

| ⚠ WARNING |
|---|
| This section is for authorised and licensed electrician only. Work behind the Control Board Cover ⑥ secured by screws must only be carried out under supervision of qualified contractor, installation engineer or service person. |

### *12.1.5.1 Open the Control Board Cover ⑥*

Please follow the steps below to open control board cover. Before opening the control board cover of Indoor Unit, always switch off all power supply (i.e. Indoor Unit power supply, heater power supply).

1. Remove the 4 mounting screws at the control board cover.
2. Swing the control board cover to the right hand side.

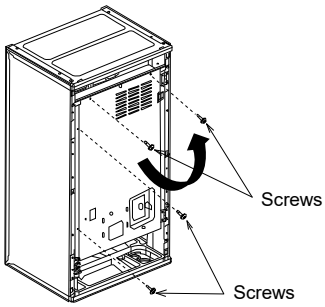


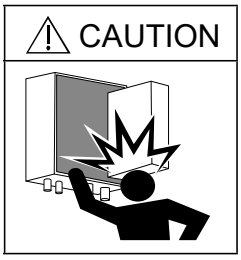


### *12.1.5.2 Fixing of Power Supply Cord and Connecting Cable*

1. Connecting cable between Indoor Unit and Outdoor Unit shall be approved polychloroprene sheathed flexible cord, type designation 60245 IEC 57 or heavier cord.
   See below table for cable size requirement.

| Model | | Connecting Cable Size |
|---|---|---|
| Indoor Unit | Outdoor Unit | |
| WH-SDC0509L3E5<br>WH-SDC0509L6E5 | WH-WDG05LE5*<br>WH-WDG07LE5*<br>WH-WDG09LE5* | 4 x min 2.5 $mm^2$ |

   - Ensure the colour of wires of Outdoor Unit and the terminal no. are the same to the Indoor Unit respectively.
   - Earth wire shall be longer than the other wires as shown in the figure for the electrical safety in case of the slipping out of the cord from the Holder (Clamper).
2. An isolating device must be connected to the power supply cable.
   - Isolating device (disconnecting means) should have minimum 3.0 mm contact gap.
   - Connect the approved polychloroprene sheathed power supply 1 cord and power supply 2 cord and type designation 60245 IEC 57 or heavier cord to the terminal board, and to the other end of the cord to isolating device (Disconnecting means). See below table for cable size requirement.

| Model | | Power Supply Cord | Cable Size | Isolating Devices | Recommended RCD |
|---|---|---|---|---|---|
| Indoor Unit | Outdoor Unit | | | | |
| WH-SDC0509L3E5 | WH-WDG05LE5*<br>WH-WDG07LE5*<br>WH-WDG09LE5* | 1 | 3 x min 2.5 $mm^2$ | 25A | 30mA, 2P, type A |
| | | 2 | 3 x min 1.5 $mm^2$ | 15/16A | 30mA, 2P, type AC |
| WH-SDC0509L6E5 | WH-WDG05LE5*<br>WH-WDG07LE5*<br>WH-WDG09LE5* | 1 | 3 x min 2.5 $mm^2$ | 25A | 30mA, 2P, type A |
| | | 2 | 3 x min 4.0 $mm^2$ | 30A | 30mA, 2P, type AC |

3. To avoid the cable and cord being damaged by sharp edges, the cable and cord must be passed through a bushing (located at the bottom of Control Board) before terminal board. The bushing must be used and must not be removed.

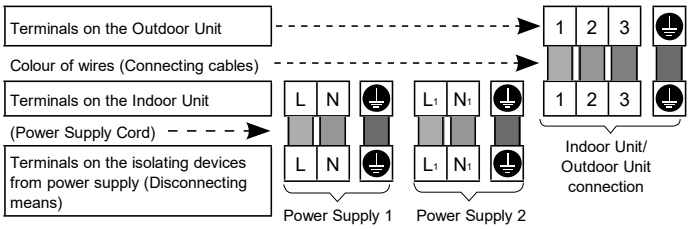


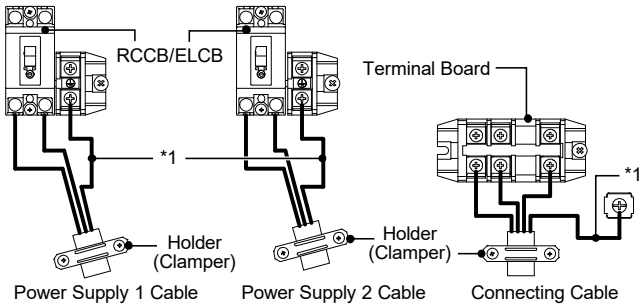


| Terminal screw | Tightening torque cN•m {kgf•cm} |
|---|---|
| M4 | 157~196 {16~20} |
| M5 | 196~245 {20~25} |

*1 - Earth wire must be longer than other cables for safety reasons

### *12.1.5.3 Wire Stripping and Connecting Requirement*

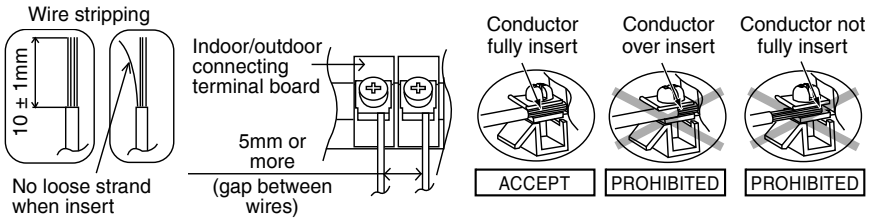


### *12.1.5.4 Connecting Requirement*

For Indoor Unit WH-SDC0509L3E5 with WH-WDG05LE5*, WH-WDG07LE5*, WH-WDG09LE5*

- The equipment's Power Supply 1 complies with IEC/EN 61000-3-2.
- The equipment's Power Supply 1 complies with IEC/EN 61000-3-3 and can be connected to current supply network.
- The equipment's Power Supply 2 complies with IEC/EN 61000-3-2.
- The equipment's Power Supply 2 complies with IEC/EN 61000-3-3 and can be connected to current supply network.

For Indoor Unit WH-SDC0509L6E5 with WH-WDG05LE5*, WH-WDG07LE5*, WH-WDG09LE5*

- The equipment's Power Supply 1 complies with IEC/EN 61000-3-2.
- The equipment's Power Supply 1 complies with IEC/EN 61000-3-3 and can be connected to current supply network.
- The equipment's Power Supply 2 complies with IEC/EN 61000-3-12.
- The equipment's Power Supply 2 complies with IEC/EN 61000-3-11 and shall be connected to suitable supply network, with the following maximum permissible system impedance $Z_{max}$ = 0.123 ohm (Ω) at the interface. Please liaise with supply authority to ensure that the Power Supply 2 is connected only to a supply of that impedance or less.

## 12.1.6 Installation of Remote Controller as Room Thermostat

- Remote Controller ③ mounted to the Indoor Unit can be moved to the room and serve as Room Thermostat.

### *12.1.6.1 Installation Location*

- Install at the height of 1 to 1.5 m from the floor (Location where average room temperature can be detected).
- Install vertically against the wall.
- Avoid the following locations for installation.
  1. By the window, etc. exposed to direct sunlight or direct air.
  2. In the shadow or backside of objects deviated from the room airflow.
  3. Location where condensation occurs (The Remote Controller is not moisture proof or drip proof.)
  4. Location near heat source.
  5. Uneven surface.
- Keep distance of 1 m or more from the TV, radio and PC. (Cause of fuzzy image or noise)

### *12.1.6.2 Remote Controller Wiring*

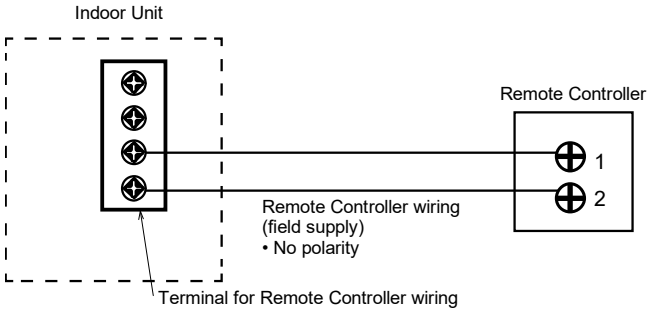


- Remote Controller cable shall be (2 x min 0.3 $mm^2$), of double insulation PVC-sheathed or rubber sheathed cable. Total cable length shall be 50 m or less.
- Be careful not to connect cables to other terminals of Indoor Unit (e.g. power source wiring terminal). Malfunction may occur.
- Do not bundle together with the power source wiring or store in the same metal tube. Operation error may occur.

### *12.1.6.3 Remove the Remote Controller from Indoor Unit*

1. Remove both Left Decoration Panel ⑮ and Right Decoration Panel ⑯ from Front Plate ① with gently push the panels from back.

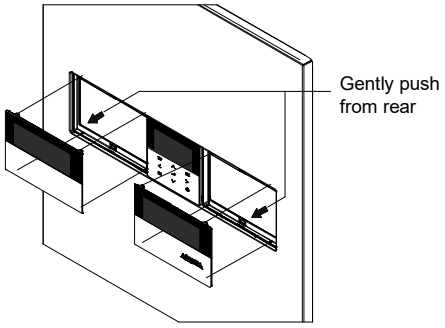


2. Remove the 4 screws and take out the holder with Remote Controller ③.

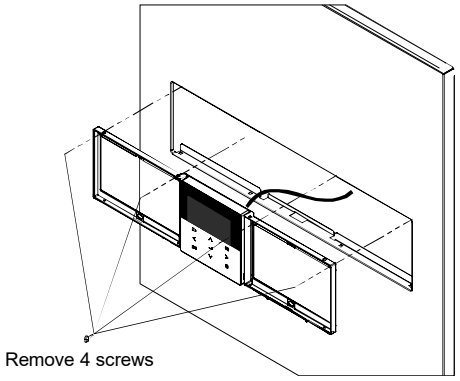


3. Remove the top case from the bottom case.

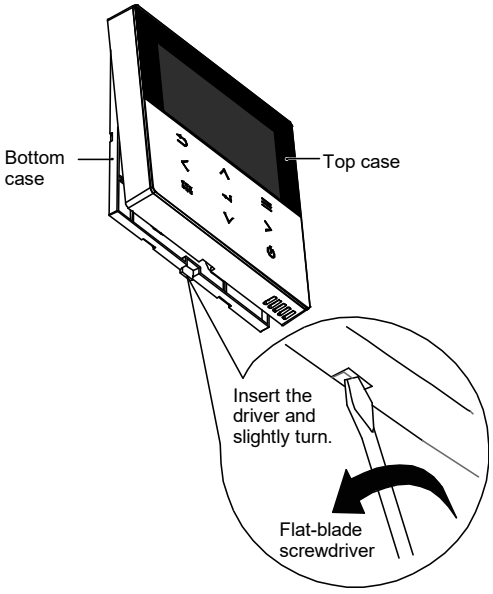

4. Remove the wiring between Remote controller ③ and Indoor Unit terminal.

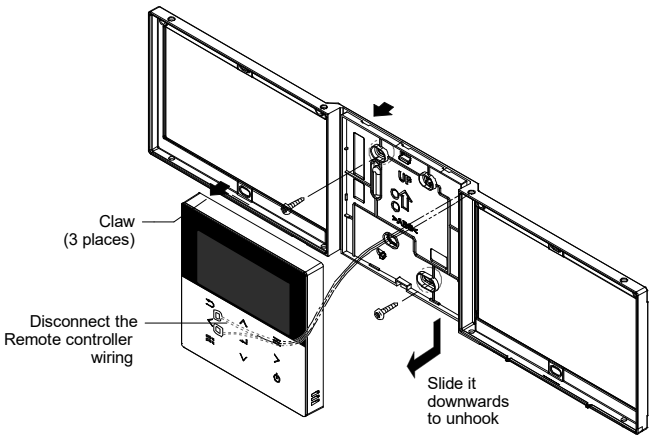


### 12.1.6.4 Mounting the Remote Controller

For exposed type
**Preparation:** Make 2 holes for screws using a driver.

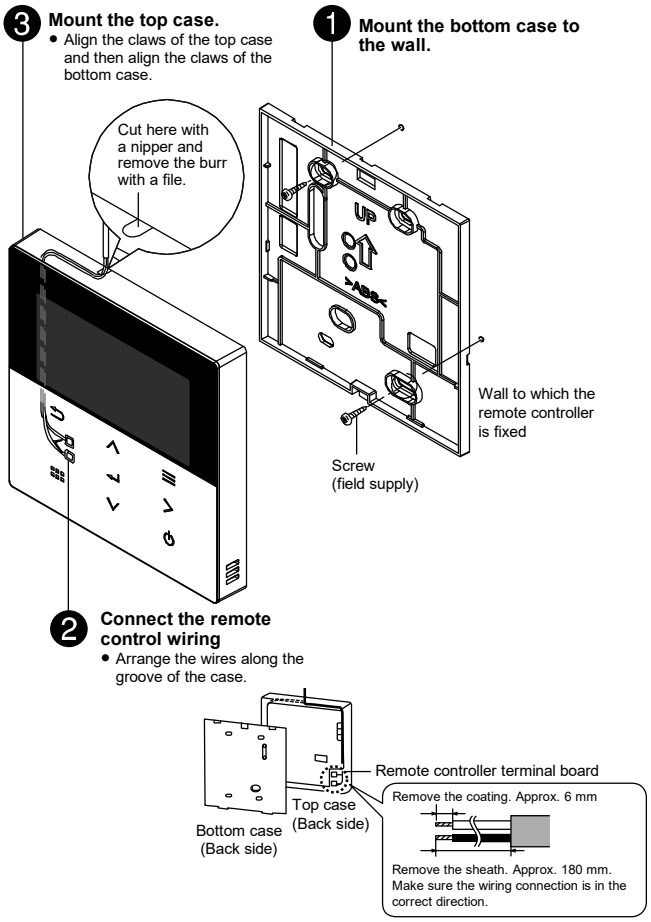


For embedded type
**Preparation:** Make 2 holes for screws using a driver.

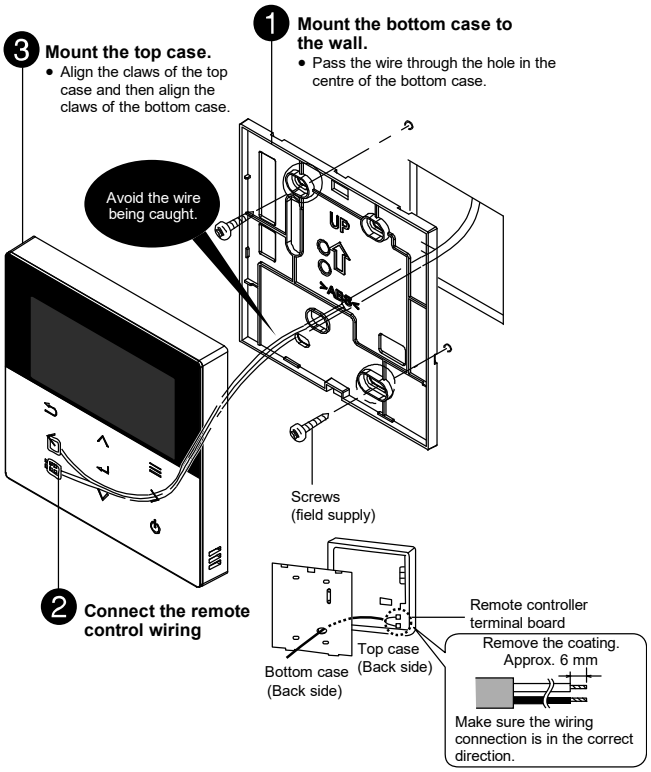


### 12.1.6.5 Replace the Remote Controller Cover

- Replace the existing Remote Controller with Remote Controller Case 7 to close the hole left after remove the Remote Controller.
  1. Refer Section “Remove The Remote Controller From Indoor Unit” for remove Remote Controller.
  2. Remove the top case from the bottom case of Remote Controller Case 7 .

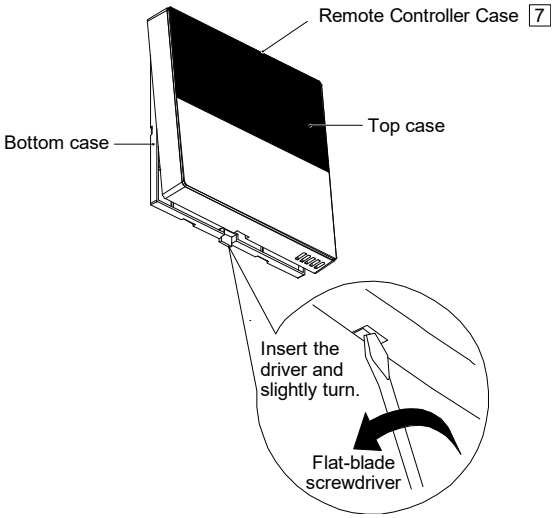


3. Reverse the steps 1 to 4 of section “Remove The Remote Controller From Indoor Unit” to fix Remote Controller Case 7 on Indoor Unit.

## 12.1.7 Charging the Water

- Make sure all the piping installations are properly done before carry out below steps.
  1. Start filling water (with pressure more than 1 bar (0.1MPa)) to the Space Heating / Cooling circuit via Tube Connector ⓐ.
  2. Stop filling water if the free water flow through Pressure Relief Valve drain pipe. (Check the Outdoor Unit)
  3. Turn ON the Indoor Unit.
  4. Remote control menu → Installer setup → Service setup → pump maximum speed → Turn on the pump.
  5. Make sure Water Pump ⑭ is running.
  6. Check and make sure no water leaking at the tube connecting points.

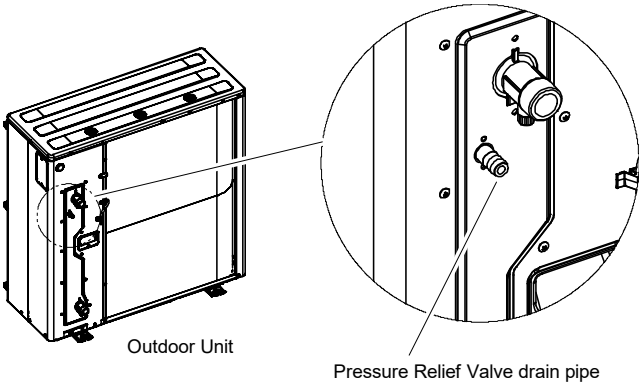


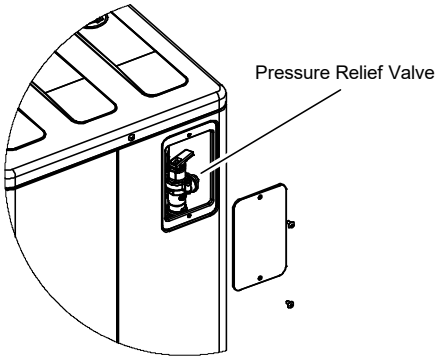


## 12.1.8 Reconfirmation

| ⚠ WARNING |
|---|
| Be sure to switch off all power supply before performing each of the below checkings. Before obtaining access to terminals, all supply circuits must be disconnected. |

### *12.1.8.1 Check Water Pressure*

*(1 bar = 0.1 MPa)

Water pressure should not lower than 0.5 bar (with inspects the Water Pressure Sensor ⑫). If necessary add water into Indoor Unit.
Fill with water from Tube Connector ⓐ.

### *12.1.8.2 Check Pressure Relief Valve*

* Pressure Relief Valve is mounted in the Outdoor Unit.

1. Confirm that the pressure relief valve is working properly, pull the lever horizontal direction.
2. Release the lever when water comes out of the drain pipe of the pressure relief valve.
   (While the air continues to come out of the drain pipe, keep raising the lever to completely discharge the air.)
3. Confirm that the water from the drain pipe stops.
4. If water is leaking, pull the lever several times and return it to make sure the water stops.
5. If water keeps coming out of the drain, drain water.
   Turn off the system and contact your local authorized dealer.

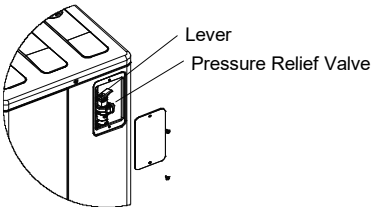


### *12.1.8.3 Check Air Accumulation*

- Open the air vent plugs on the heating panel, fan convector, etc., and remove the air accumulated in the equipment and piping.
- If the outdoor unit and the indoor unit are installed on different floors, open the air vent plug on the water plug of the outdoor unit and the air vent plug on the heater bottle inside the indoor unit to remove the air. (be careful, water will come out)

### *12.1.8.4 Expansion Vessel ⑪ Pre Pressure Checking*

[Upper limit water volume of the system]

- The Indoor Unit has a build-in Expansion Vessel with 10 L air volume and initial pressure of 1 bar. (1bar = 100kPa = 0.1MPa)
- Total amount of water in the system should be below 200 L.
- Inner volume of Indoor Unit piping is about 5L.
- If the total amount of water is more than 200 L, please add expansion vessel (field supply).
- Please keep the installation height difference of system water circuit within 10 m. (Extra pump may be required)
- The expansion vessel volume required for the system can be calculated from the formula below.

$$V = \frac{\varepsilon \times Vo}{1 - \frac{98 + P_1}{98 + P_2}}$$

V : Required gas volume <expansion vessel volume L>
Vo : System total water volume <L>
ε : Water expansion rate 5 → 60˚C = 0.0171
$P_1$ : Expansion tank filling pressure = (100) kPa
$P_2$ : System maximum pressure = 300 kPa

- ( ) Please confirm at actual place
- The gas volume of the sealed type expansion vessel is presented by <V>.

O It's advised to add 10% margin for required gas volume of calculation.

Water expansion rate table

| Water temperature (°C) | Water expansion rate ε |
|---|---|
| 10 | 0.0003 |
| 20 | 0.0019 |
| 30 | 0.0044 |
| 40 | 0.0078 |
| 50 | 0.0121 |
| 60 | 0.0171 |
| 70 | 0.0228 |
| 80 | 0.0291 |
| 90 | 0.0360 |

[Adjustment of the initial pressure of the expansion vessel when there is a difference in installation height]
If the height difference between the Indoor Unit and the highest point of the system water circuit (H) is more than 7m, please adjust the initial pressure of the expansion vessel (Pg) according to the following formula.

Pg= (H*10+30) kPa

### *12.1.8.5 Check RCCB/ELCB*

Ensure the RCCB/ELCB set to "ON" condition before check RCCB/ELCB.
Turn on the power supply to the Indoor Unit.
This testing could only be done when power is supplied to the Indoor Unit.

| ⚠ WARNING |
|---|
| Be careful not to touch parts other than RCCB/ELCB test button when the power is supplied to Indoor Unit. Else, electrical shock may happen. Before obtaining access to terminals, all supply circuits must be disconnected. |

- Push the "TEST" button on the RCCB/ELCB. The lever would turn down, if it functions normal.
- Contact authorized dealer if the RCCB/ELCB malfunction.
- Turn off the power supply to the Indoor Unit.
- If RCCB/ELCB functions normal, set the lever to "ON" again after testing finish.

## 12.1.9 Test Run

1. Before test run, make sure below items have been checked:-
   a) Pipework are properly done.
   b) Electric cable connecting work are properly done.
   c) Indoor Unit is filled up with water and trapped air is released.
   d) Please turn on the power supply after filling the Indoor until full.
2. Switch ON the power supply of the Indoor Unit. Set the Indoor Unit RCCB /ELCB to "ON" condition. Then, please refer to the Operation Instruction for operation of Remote Controller ③.

| Note: |
|---|
| • During winter, turn on the power supply and standby the unit for at least 15 minutes before test run. Allow sufficient time to warm up refrigerant and prevent wrong error code judgement. |

3. For normal operation, Water Pressure reading should be in between 0.5 bar and 3 bar (0.05 MPa and 0.3 MPa). If necessary, adjust the Water Pump ⑭ SPEED accordingly to obtain normal water pressure operating range. If adjust Water Pump ⑭ SPEED cannot solve the problem, contact your local authorized dealer.
4. After test run, please clean the Magnetic Water Filter Set ⑬. Reinstall it after finish cleaning.

### *12.1.9.1 Check Water Flow of Water Circuit*

Select Installer setup → Service setup →
Pump maximum speed → Air purge
Confirm the maximum water flow during main pump operation not less than 15 l/min.
* Water flow can be check through service setup (Pump Max Speed)
[Heating operation at low water temperature with lower water flow may trigger "H75" during defrost process.]
*If there is no flow or H62 is displayed, stop operating the pump and release the air (see Checking for Air Accumulation).

### *12.1.9.2 Reset Overload Protector ⑩*

Overload Protector ⑩ a serves the safety purpose to prevent the water over heating. When the Overload Protector ⑩ a trip at high water temperature, take below steps to reset it.

1. Take out the cover.
2. Use a test pen to push the centre button gently in order to reset the Overload Protector ⑩.
3. Fix the cover to the original fixing condition.

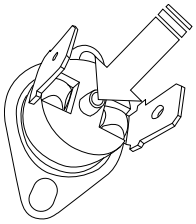


## 12.1.10 Maintenance

- In order to ensure safety and optimal performance of the Indoor unit, seasonal inspections on the Indoor unit, functional check of RCCB/ELCB, field wiring and piping have to be carried out at regular intervals. This maintenance should be carried out by authorized dealer. Contact dealer for scheduled inspection.

### *12.1.10.1 Maintenance for Magnetic Water Filter Set ⑬*

1. Turn OFF power supply.
2. Place a container below Magnetic Water Filter Set ⑬.
3. Turn to remove the Magnet Bar at bottom of Magnetic Water Filter Set ⑬.
4. By using Allen key (8mm), remove the Cap of Discharge Port.
5. By using Allen Key (4mm), open the Service Valve to release the dirty water from the Discharge Port into a container. Close the service valve when the container is full to avoid spillage in the tank unit. Dispose the dirty water.
6. Reinstall the Cap of Discharge Port and Magnet Bar.
7. Re-charging the water to Space Heating / Cooling circuit if necessary (refer Section 12.1.7 for details.)
8. Turn ON power supply.

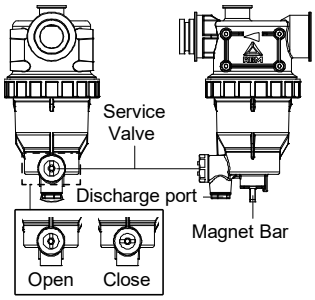

## 12.2 Outdoor Unit

**Attached accessories**

| No. | Accessories part | Qty. |
|---|---|---|
| 1 | Drain elbow | 1 |
| 2 | Rubber cap | 3 |
| 3 | Discharge grille (left side) 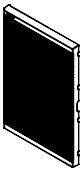 | 1 |
| 4 | Discharge grille (right side) 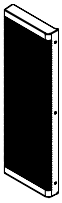 | 1 |
| 5 | Screw | 4 |

**Optional accessories**

| No. | Accessories part | Qty. |
|---|---|---|
| 6 | Base Pan Heater<br>CZ-NE4P | 1 |

- It is strongly recommended to install a Base Pan Heater (optional) if the outdoor unit is install in cold climate area. Refer the Base Pan Heater (optional) installation instruction for details of installation.

### 12.2.1 Select the Best Location

- If an awning is built over the unit to prevent direct sunlight or rain, be careful that heat radiation from the condenser is not obstructed.
- For WH-WDG05LE5, WDG07LE5 and WDG09LE5, avoid installations in areas where the ambient temperature may drop below -25°C.
- A protective zone is defined for the area close around the product. See section "12.2.2 Protective zone".
- Do not place any obstacles which may cause a short circuit of the discharged air.
- If outdoor unit installed near sea, region with high content of sulphur or oily location (e.g. machinary oil, etc), it lifespan maybe shorten.
- Please follow the table below for water piping specifications.

| Model | Water piping between outdoor unit and indoor unit | | | |
|---|---|---|---|---|
| | Inner diameter | Maximum length | Insulator thickness | Maximum Elevation |
| WH-WDG05LE5 | ø20 | 30 m | 30 mm or more | 10 m |
| WH-WDG07LE5 | ø25 | | | |
| WH-WDG09LE5 | | | | |

### 12.2.2 Protective Zone

This outdoor unit is filled with R290(Extremely flammable gas, safety A3 group per ISO 817). Note that this refrigerant has a higher density than air. In case of a refrigerant leak, the leaked refrigerant may accumulate near the ground.

Prevent accumulation of refrigerant in any way that is potentially dangerous, explosive or risk suffocation. Prevent refrigerant from entering the building through building openings. Prevent accumulation of refrigerant in the drain grooves.

A protective zone is defined around this outdoor unit. There must be no building openings, windows, doors, light shafts, cellar entrances, escape hatches, flat-roof windows or ventilation openings in the protective zone.

There must be no ignition sources, such as heat above 360°C, sparks, open flame, plug sockets, light switches, lamps, electrical switches or other permanent ignitions sources, in the protective zone.

The protective zone must not extend to adjacent buildings or public traffic areas (boundaries of neighbors, the public road, neighbor's private roads, subsidence area, depressions, pump shafts, sewers intakes, waste water shafts and so on.).

In the protective zone, you are not permitted to make any subsequent structural alterations which infringe the stated rules for the protective zone.

1) Protective zone for ground installation (or flat-roof installation) at the open areas

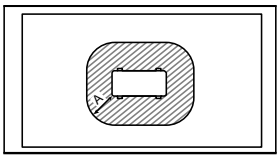


A 1000 mm

2) Protective zone for ground installation in front of a building wall

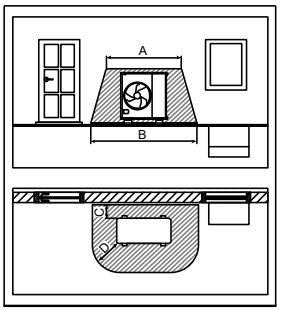


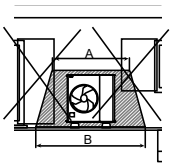


A 2000 mm
B 3000 mm
C 300 mm
D 1000 mm

3) Protective zone for ground installation in a building corner

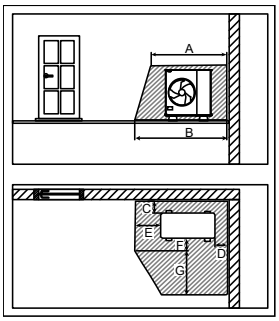


A 2000 mm
B 2500 mm
C 300 mm
D 500 mm
E 1000 mm
F 500 mm
G 1800 mm

4) Protective zone for wall installation in front of a building wall

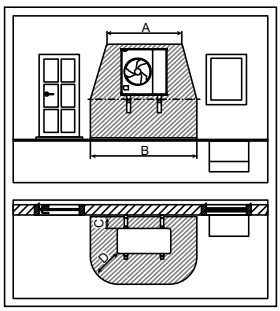


A 2000 mm
B 3000 mm
C 300 mm
D 1000 mm

The protective zone under the product extends to the floor.

5) Protective zone for wall installation in a building corner

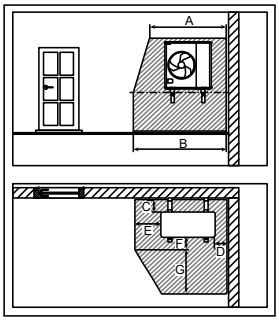


A 2000 mm
B 2500 mm
C 300 mm
D 500 mm
E 1000 mm
F 500 mm
G 1800 mm

The protective zone under the product extends to the floor.

## 12.2.3 Install the Outdoor Unit

### *12.2.3.1 Dimension Diagram*

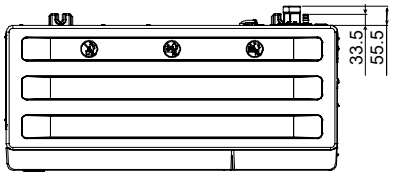


Top view

It is advisable to avoid more than 2 blockage directions. For better ventilation & multiple-outdoor installation, please consult authorized dealer/specialist.

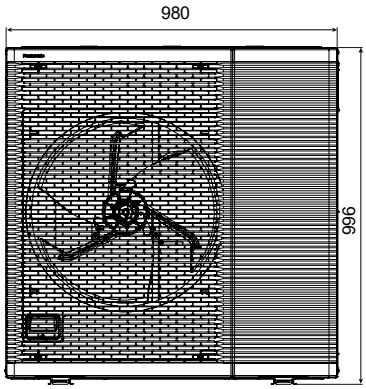


Front view

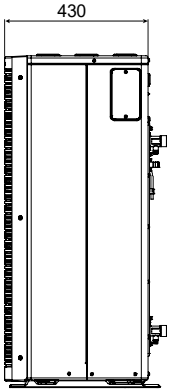


Side view

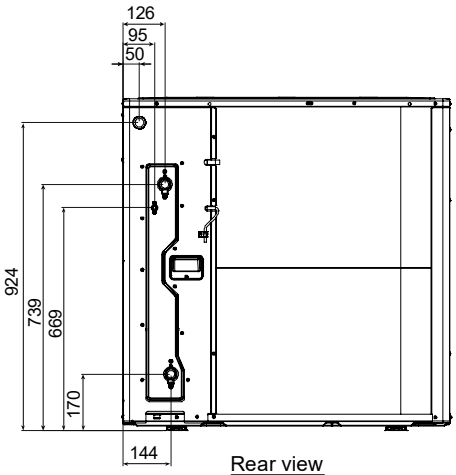


Rear view

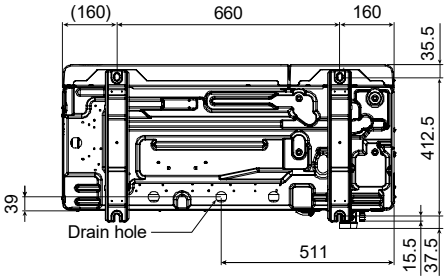


Bottom view

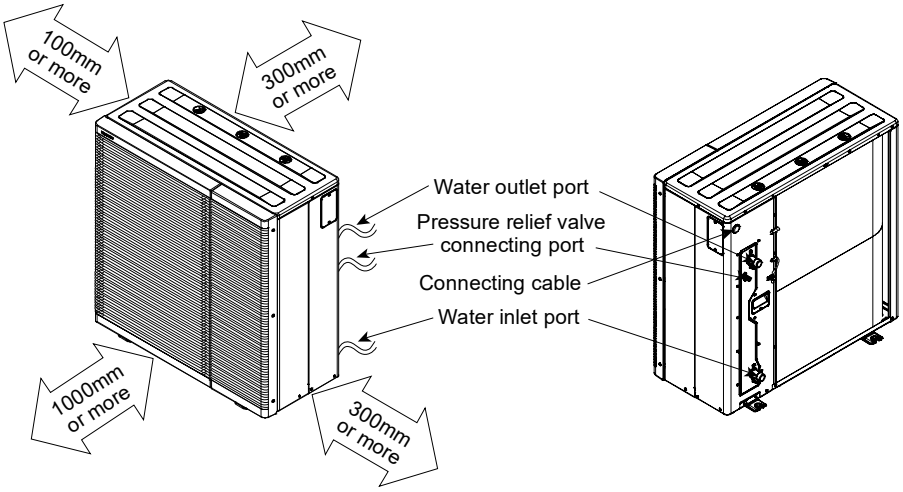


- After selecting the best location, start installation according to Installation Diagram.
  1. When installing at roof, please consider strong wind and earthquake. Please fasten the installation stand firmly with bolt or nails.
  2. When installing to a concrete or solid surface, use M10 or a W 3/8 bolts and nuts to secure the unit. Ensure that it installed upright on a horizontal plane. (Use an anchor bolt for the installation as shown in the diagram below.)

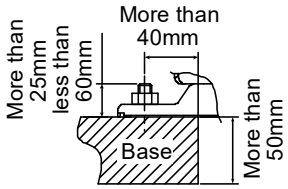


Anchor bolt length

### *12.2.3.2 Disposal of Outdoor Unit Drain Water*

- When a Drain elbow 1 is used, please ensure to follow below:
  - the unit should be placed on a stand which is taller than 50 mm.
  - cover the ø32mm holes with Rubber cap 2 (refer to illustration below).
  - use a tray (field supply) when necessary to dispose the outdoor unit drain water.
- If the unit is used in an area where temperature falls below 0°C for 2 or 3 consecutive days, it is recommended not to use the Drain elbow 1 and Rubber cap 2 , for the drain water freezes and the fan will not rotate.

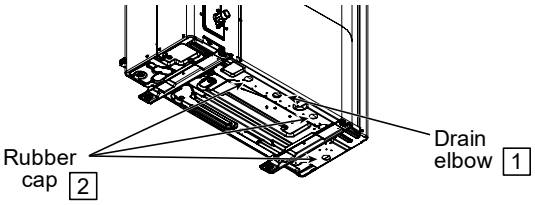


**Pressure relief valve drainage pipe-work**

- Use a drain hose with inner diameter of 15mm.
- The hose must be installed in a continuously downward direction and left open to the frost-free atmosphere.
- If drain hose is long, use a metal support fixture along the way to eliminate the wavy pattern of drain hose.
- Water will drip from this hose, therefore the outlet of this hose must be installed in an area where the outlet cannot become blocked.
- Do not insert this hose into sewage or drain pipe that may generate ammonia gas, sulfuric gas, etc.
- If necessary, use a hose clamp to tighten the hose at drain hose connector to prevent it from leaking.

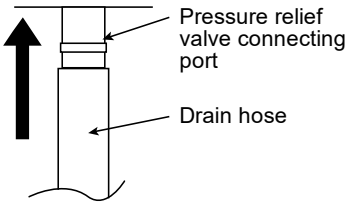


Illustration of how to fix drain hose to unit

## 12.2.4 Connect the Cable to the Outdoor Unit

(FOR DETAIL REFER TO WIRING DIAGRAM AT UNIT)

1. Attach the discharge grille (left side) 3 for safety before connecting the cable.

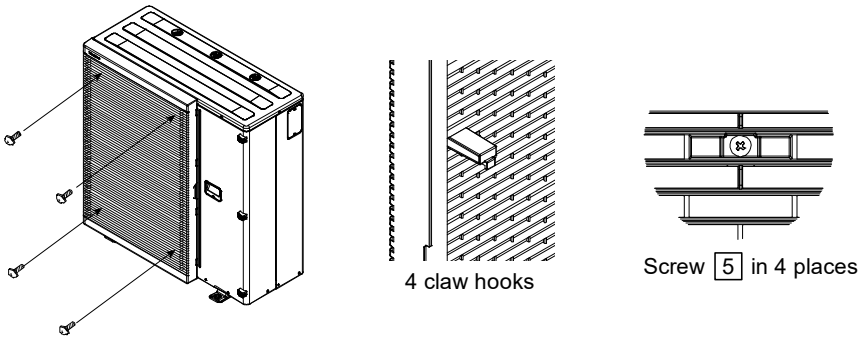


2. Connecting cable between indoor unit and outdoor unit shall be approved polychloroprene sheathed flexible cable (see below table), type designation 60245 IEC 57 or heavier cable. Sheath diameter of connecting cable shall be within specification (see below table) to fit cable gland.

| Flexible cable specification | Cable diameter |
|---|---|
| 4 × min 2.5 $mm^2$ | ø12.0-14.0 |

3. Route the cable as follows

*1 Locally procured cabtyre cables with the specified diameter.

*2 Must be fastened with the specified torque Viewpoint of gas intrusion prevention.

① Remove the front plate (Fig. 4-1)
② Remove the terminal cover and cable gland cap (Fig. 4-2)
③ Insert the cabtyre cable *1 (Fig. 4-3, 4-4)
(Pulled in from the rear panel and inserted from the bottom of the electric controller BOX)
④ Connect to terminal block (Fig. 4-5)
⑤ Fasten the cable gland *2 (Fig. 4-4)
⑥ Set the terminal cover *2 (Fig. 4-2)
⑦ Set the front plate (Fig. 4-1)

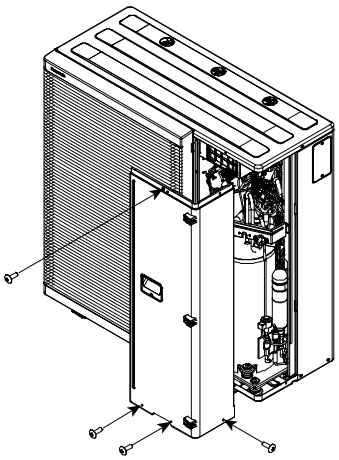

Fig. 4 - 1

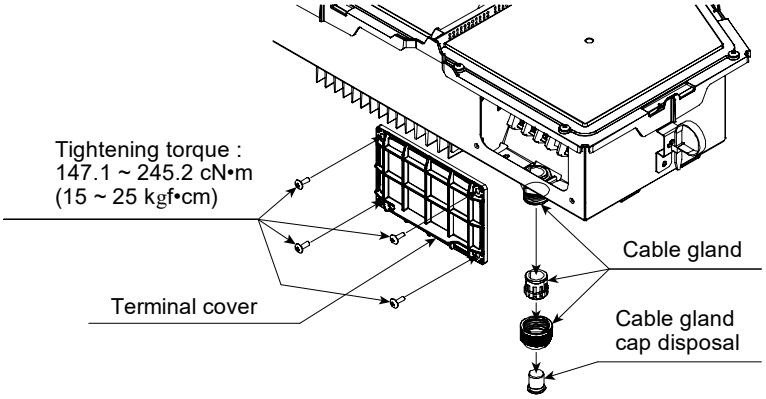


Fig. 4 - 2

The cabinet top plate does not need to be removed.

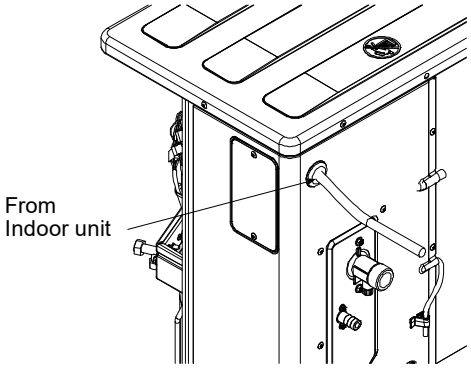


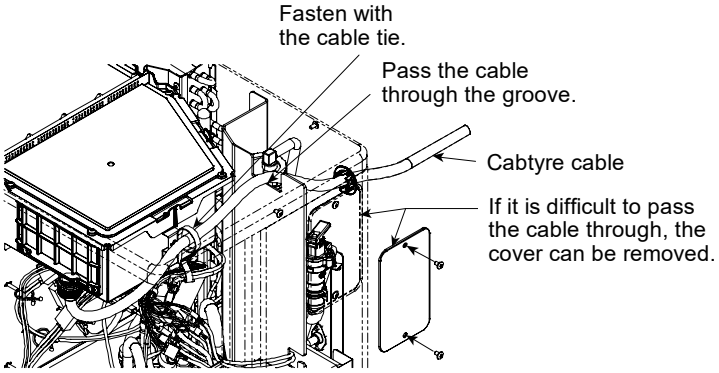


Fig. 4 - 3

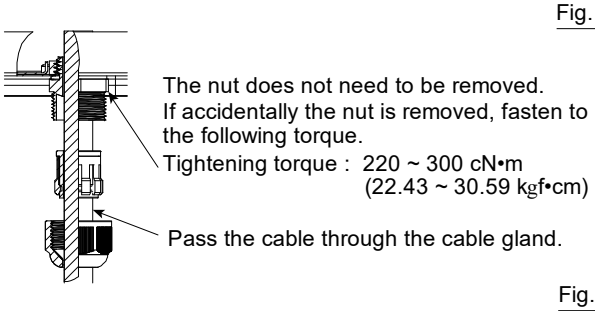


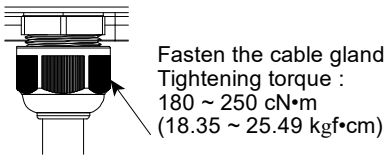


Fig. 4 - 4

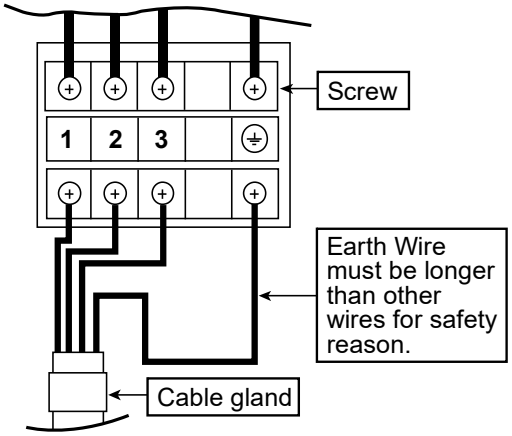


**⚠ WARNING**

This equipment must be properly earthed.

| Terminals on the indoor unit | 1 | 2 | 3 | ⏚ |
|---|---|---|---|---|
| Colour of wires | | | | |
| Terminals on the outdoor unit | 1 | 2 | 3 | ⏚ |

| Terminal screw | Tightening torque cN•m {kgf•cm} |
|---|---|
| M4 | 157 ~ 196 {16 ~ 20} |
| M5 | 196 ~ 245 {20 ~ 25} |

### *12.2.4.1 Wire Stripping and Connecting Requirement*

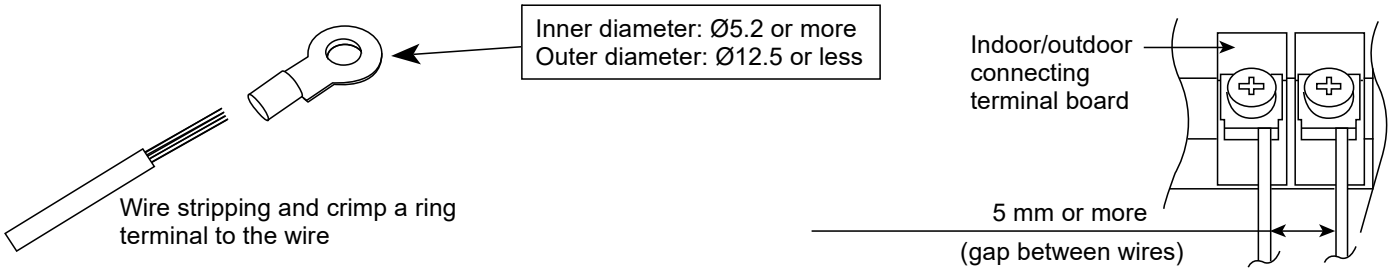


Fig. 4 - 5

## 12.2.5 Pipe Insulation

1. Please carry out insulation at pipe connection portion as mentioned in Indoor/Outdoor Unit Installation Diagram. Please wrap the insulated piping end to prevent water from going inside the piping.

## 12.2.6 Install the Discharge Grille

1. Remove the 3 screws fastened to the cabinet front plate. (Fig. 6-1)
2. Insert 4 claws of the discharge grille (right side) 4 and fasten the 3 screws. (Fig. 6-2)

**⚠ CAUTION**

Make sure to install the discharge grille to the outdoor unit before powering ON to protect againts a rotating fan.

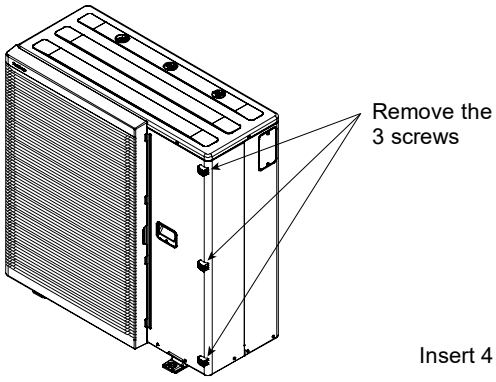


Fig. 6-1

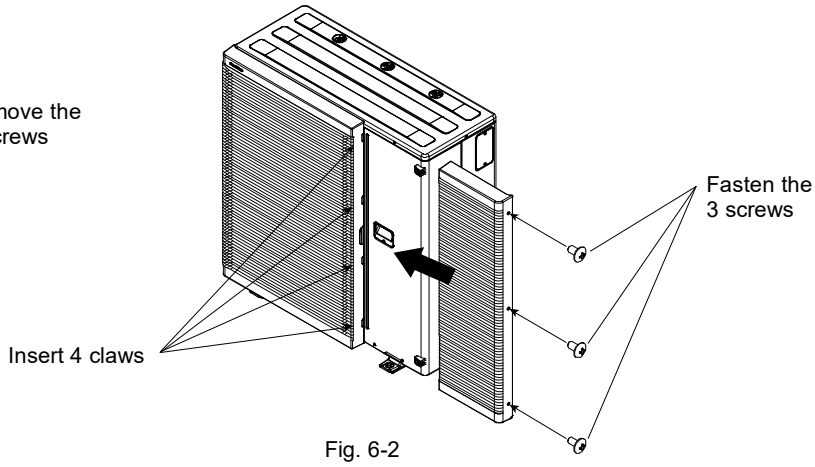


Fig. 6-2

**⚠ CAUTION**

If cleaning of the outdoor unit is necessary during installation or servicing, do not clean the outdoor unit with any hydrocarbon based solvent.

# 12.3 Appendix

## 12.3.1 Variation of System

This section introduces variation of various systems using Air-To-Water Heatpump and actual setting method.

### *12.3.1.1 Introduce Application Related to Temperature Setting*

#### *12.3.1.1.1 Temperature Setting Variation for Heating*

1. Remote Controller

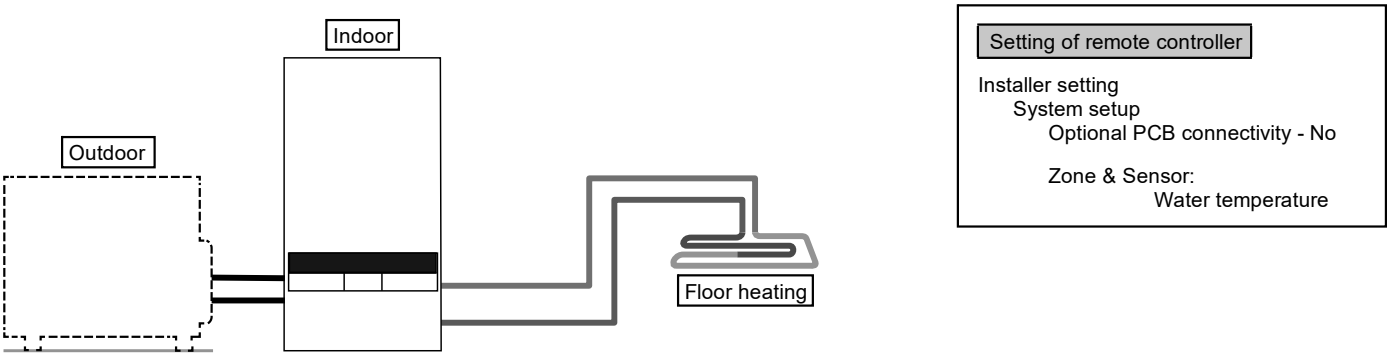


Connect floor heating or radiator directly to the Indoor Unit.
Remote controller is installed on Indoor Unit.
This is the basic form of the most simple system.

2. Room Thermostat

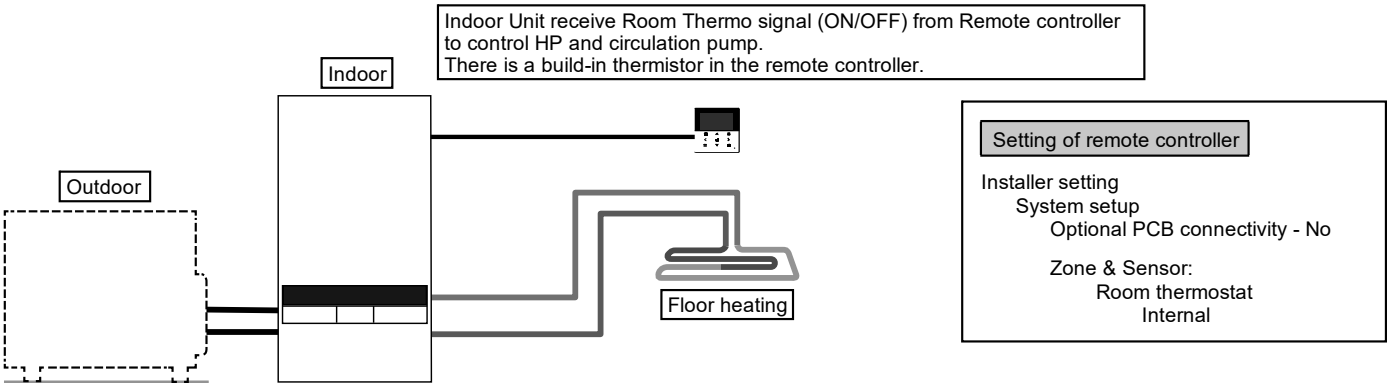


Connect floor heating or radiator directly to the Indoor Unit.
Remove remote controller from Indoor Unit and install it in the room where floor heating is installed.
This is an application that uses remote controller as Room Thermostat.

3. External Room Thermostat

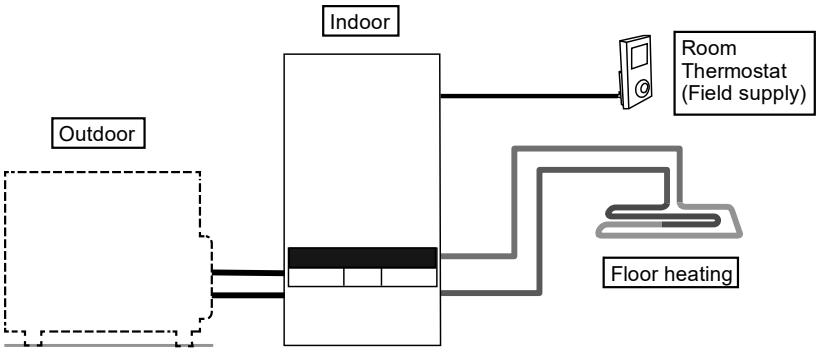


Setting of remote controller

Installer setting
System setup
Optional PCB connectivity - No

Zone & Sensor:
Room thermostat
(External)

Connect floor heating or radiator directly to Indoor Unit.
Remote controller is installed on Indoor Unit.
Install separate external Room Thermostat (field supply) in the room where floor heating is installed.
This is an application that uses external Room Thermostat.

4. Room Thermistor

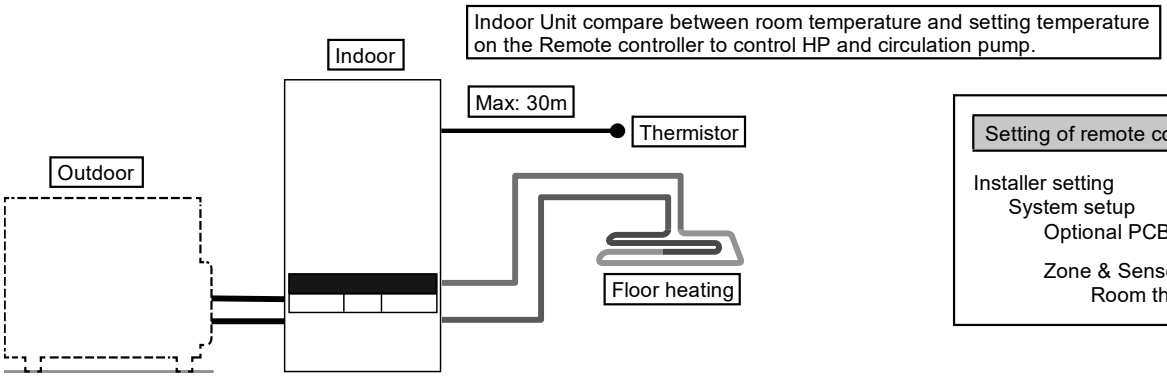


Setting of remote controller

Installer setting
System setup
Optional PCB connectivity - No

Zone & Sensor:
Room thermistor

Connect floor heating or radiator directly to Indoor Unit.
Remote controller is installed on Indoor Unit.
Install separate external room thermistor (specified by Panasonic) in the room where floor heating is installed.
This is an application that uses external room thermistor.

There are 2 kinds of circulation water temperature setting method.
Direct: set direct circulation water temperature (fixed value)
Compensation curve: set circulation water temperature depends on outdoor ambient temperature
In case of Room thermo or Room thermistor, compensation curve can be set.
In this case, compensation curve is shifted according to the thermo ON/OFF situation.

- (Example) If room temperature increasing speed is;
  very slow → shift up the compensation curve
  very fast → shift down the compensation curve

### 12.3.1.1.2 Examples of Installations

Floor heating 1 + Floor heating 2

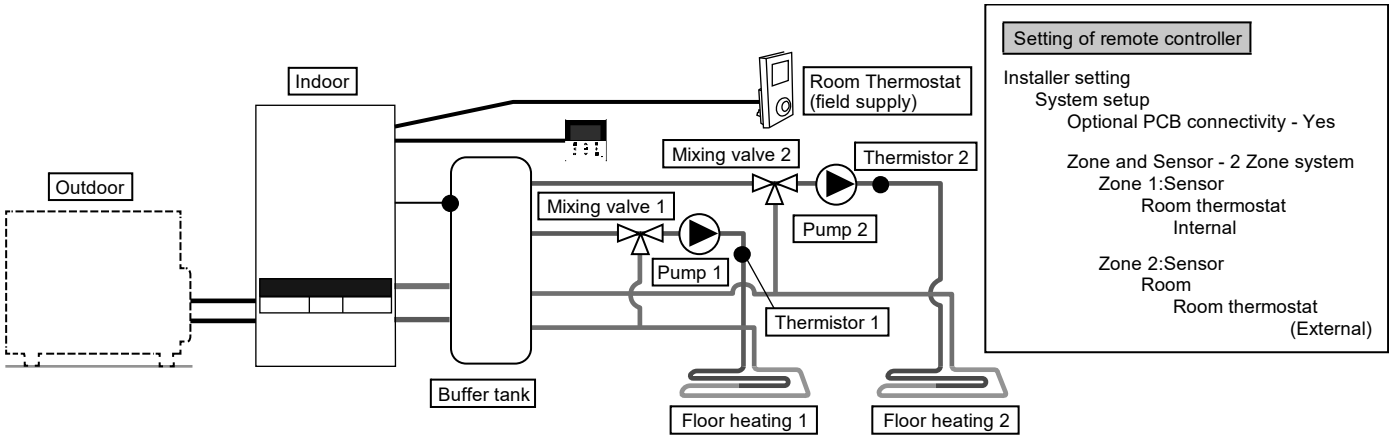


Connect floor heating to 2 circuits through buffer tank as shown in the figure.
Install mixing valves, pumps and thermistors (specified by Panasonic) on both circuits.
Remove remote controller from Indoor Unit, install it in one of the circuit and use it as Room Thermostat.
Install external Room Thermostat (field supply) in another circuit.
Both circuits can set circulation water temperature independently.
Install buffer tank thermistor on buffer tank.
It requires connection setting of buffer tank and ΔT temperature setting at heating operation separately.
This system requires Optional PCB (CZ-NS5P).

NOTE : Buffer tank thermistor must be connected to main indoor PCB only.

Floor heating + Radiator

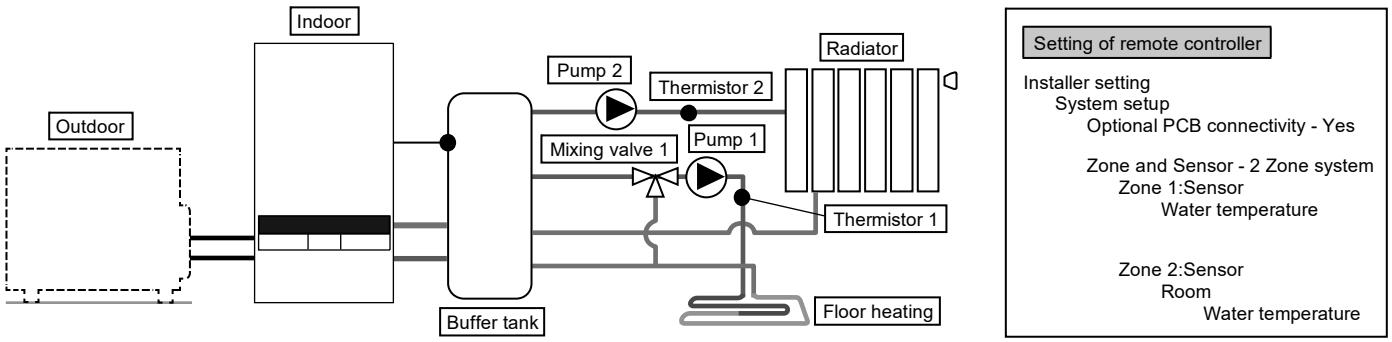


Connect floor heating or radiator to 2 circuits through buffer tank as shown in figure.
Install pumps and thermistors (specified by Panasonic) on both circuits.
Install mixing valve in the circuit with lower temperature among the 2 circuits.
(Generally, if install floor heating and radiator circuit at 2 zones, install mixing valve in floor heating circuit.)
Remote controller is installed on Indoor Unit.
For temperature setting, select circulation water temperature for both circuits.
Both circuits can set circulation water temperature independently.
Install buffer tank thermistor on buffer tank.
It requires connection setting of buffer tank and ΔT temperature setting at heating operation separately.
This system requires the Optional PCB (CZ-NS5P).
Mind that if there is no mixing valve at the secondary side, the circulation water temperature may get higher than setting temperature.

NOTE : Buffer tank thermistor must be connected to main indoor PCB only.

Floor heating + Swimming pool

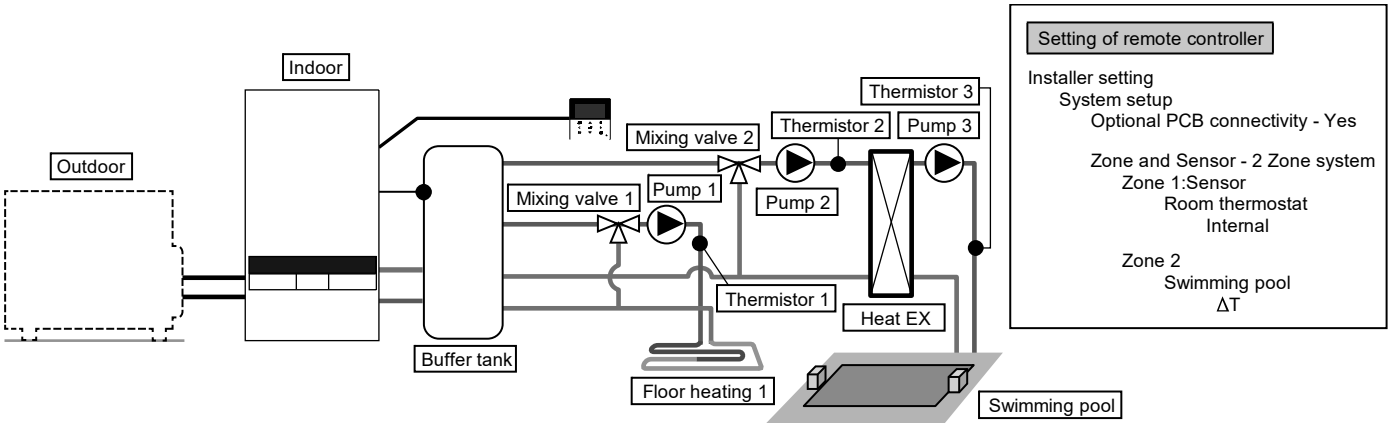


Connect floor heating and swimming pool to 2 circuits through buffer tank as shown in figure.
Install mixing valves, pumps and thermistors (specified by Panasonic) on both circuits.
Then, install additional pool heat exchanger, pool pump and pool sensor on pool circuit.
Remove remote controller from Indoor Unit and install in room where floor heating is installed. Circulation water temperature of floor heating and swimming pool can be set independently.
Install buffer tank sensor on buffer tank.
It requires connection setting of buffer tank and ΔT temperature setting at heating operation separately. This system requires the Optional PCB (CZ-NS5P).

❈ Must connect swimming pool to “Zone 2”.
If it is connected to swimming pool, operation of pool will stop when “Cooling” is operated.

NOTE : Buffer tank thermistor must be connected to main indoor PCB only.

Swimming pool only

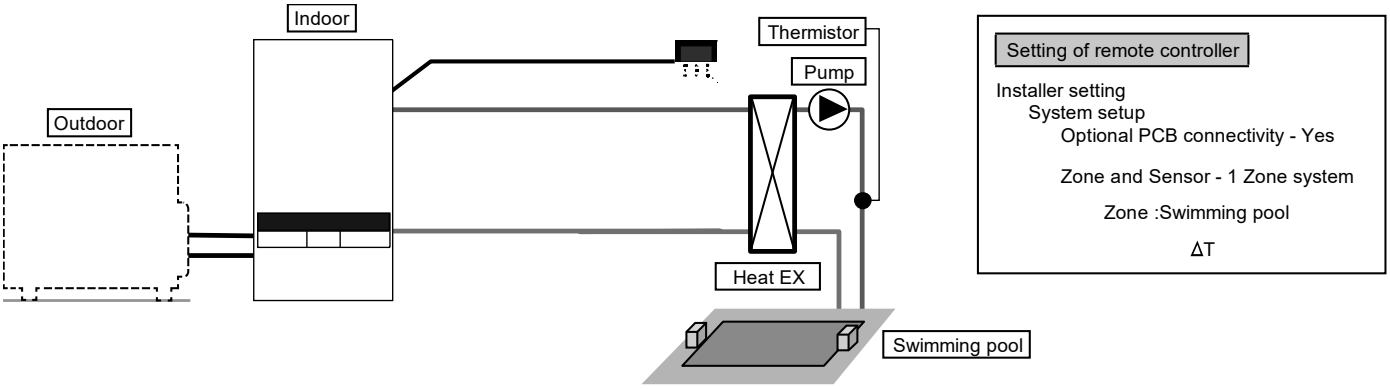


This is an application that connects to the swimming pool only.
Connects pool heat exchanger directly to Indoor Unit without using buffer tank.
Install pool pump and pool sensor (specified by Panasonic) at secondary side of the pool heat exchanger.
Remove remote controller from Indoor Unit and install in room.
Temperature of swimming pool can be set independently.
This system requires the Optional PCB (CZ-NS5P).

In this application, cooling mode cannot be selected. (not display on remote controller)

Simple 2 zone (Floor heating + Radiator)

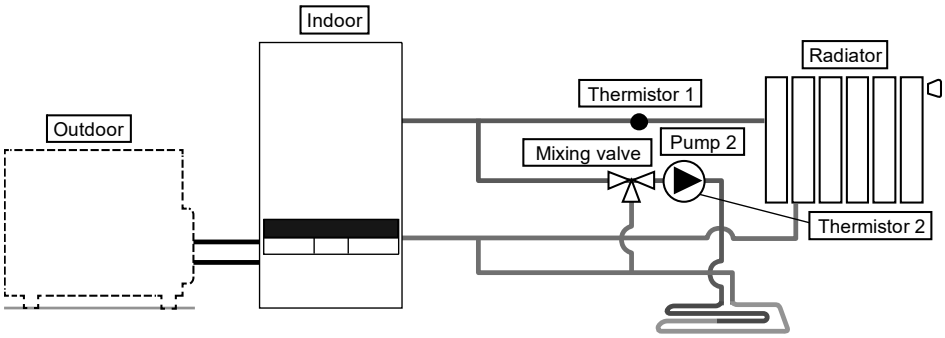


Setting of remote controller

Installer setting
System setup
Optional PCB connectivity - Yes

Zone and Sensor - 2 Zone system
Zone 1:Sensor
Water temperature

Zone 2:Sensor
Room
Water temperature

Operation setup
Heat
ΔT for heating ON – 1°C

Cool
ΔT for cooling ON – 1°C

This is an example of simple 2 zone control without using buffer tank.
Built-in pump from Indoor Unit served as a pump in zone 1.
Install mixing valve, pump and thermistor (specified by Panasonic) on zone 2 circuit.
Please be sure to assign high temperature side to zone 1 as temperature of zone 1 cannot be adjusted.
Zone 1 thermistor is required to display temperature of zone 1 on remote controller.
Circulation water temperature of both circuits can be set independently.
(However, temperature of high temperature side and low temperature side cannot be reversed)
This system requires the Optional PCB (CZ-NS5P).

(NOTE)
- Thermistor 1 does not affect operation directly. But error happens if it is not installed.
- Please adjust flow rate of zone 1 and zone 2 to be in balance. If it is not adjusted correctly, it may affects the performance.
  (If zone 2 pump flow rate is too high, there is possibility that no hot water flowing to zone 1.)
  Flow rate can be confirmed by “Actuator Check” from maintenance menu.

### *12.3.1.1.3 Introduce Applications of System that Uses Optional Equipment*

DHW (Domestic Hot Water) Tank connection

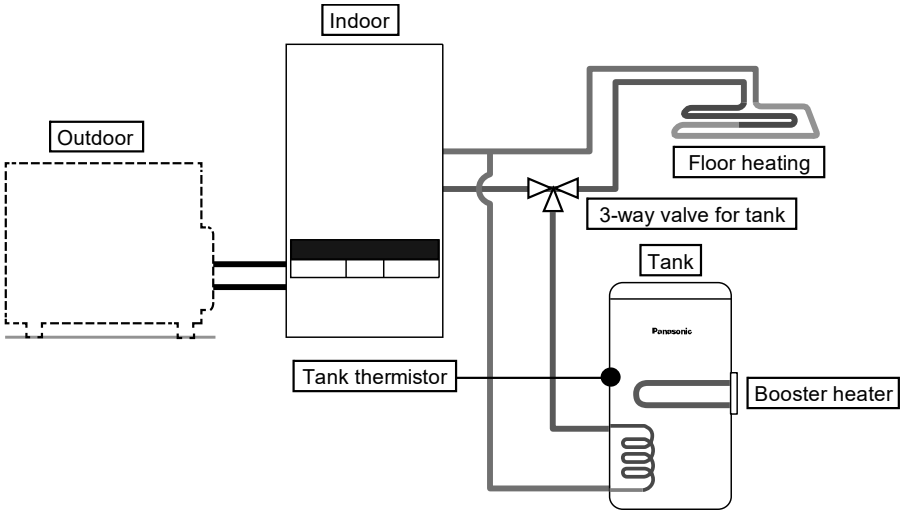


Setting of remote controller

Installer setting
System setup
Optional PCB connectivity - No

Tank connection - Yes

This is an application that connects the DHW tank to the Indoor Unit through 3-way valve.
DHW tank's temperature is detected by tank thermistor (specified by Panasonic).

Tank + Solar connection

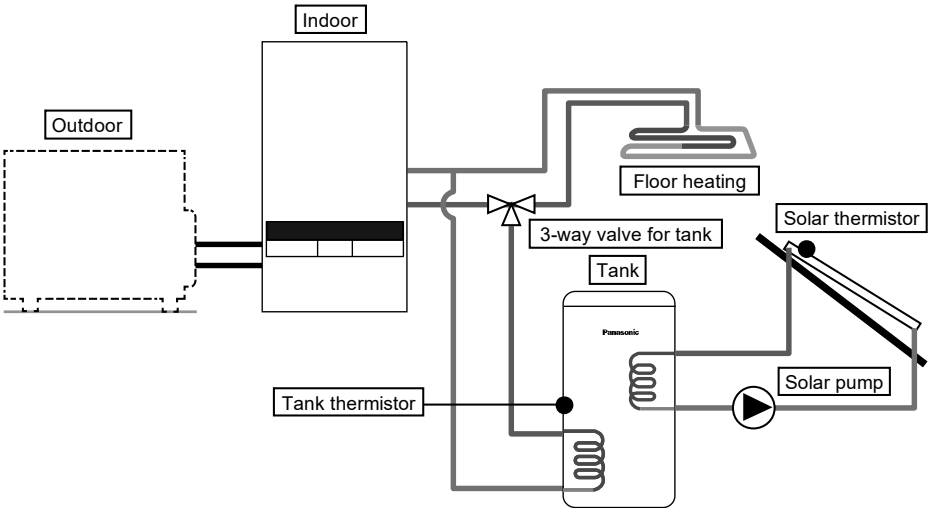


Setting of remote controller

Installer setting
System setup
Optional PCB connectivity - Yes

Tank connection - Yes

Solar connection - Yes
DHW tank
ΔT turn ON
ΔT turn OFF
Antifreeze
Hi limit

This is an application that connects the DHW tank to the Indoor Unit through 3-way valve before connect the solar water heater to heat up the tank. DHW tank's temperature is detected by tank thermistor (specified by Panasonic).
Solar panel's temperature is detected by solar thermistor (specified by Panasonic).
DHW tank shall use tank with built-in solar heat exchange coil independently.
Heat accumulation operates automatically by comparing the temperature of tank thermistor and solar thermistor.
During winter season, solar pump for circuit protection will be activated continuously. If does not want to activate the solar pump operation, please use glycol and set the anti-freezing operation start temperature to -20°C.
This system requires Optional PCB (CZ-NS5P).

NOTE : Room thermistor zone 1 and External room thermostat zone 1 must be connected to main indoor PCB only.

Buffer tank connection

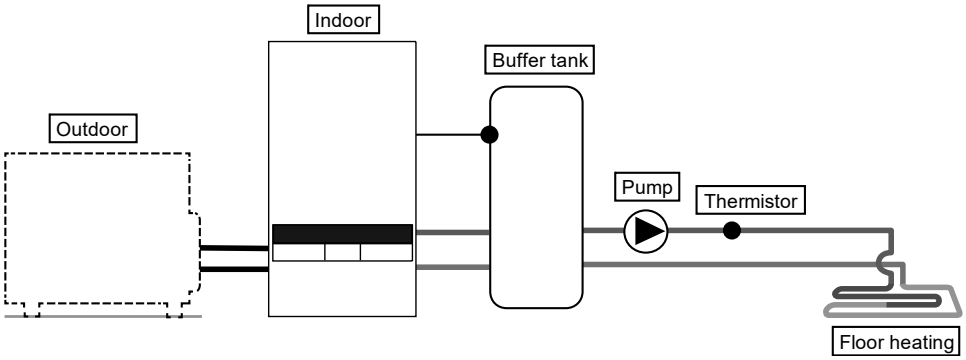


Setting of remote controller

Installer setting
System setup
Optional PCB connectivity - Yes

Buffer Tank connection - Yes
ΔT for buffer tank

This is an application that connects the buffer tank to the Indoor Unit.
Buffer tank's temperature is detected by buffer tank thermistor (specified by Panasonic).
This system requires Optional PCB (CZ-NS5P).

NOTE : Buffer tank thermistor, Room thermistor zone 1 and External room thermostat zone 1 must be connected to main indoor PCB only.

Buffer tank + Solar

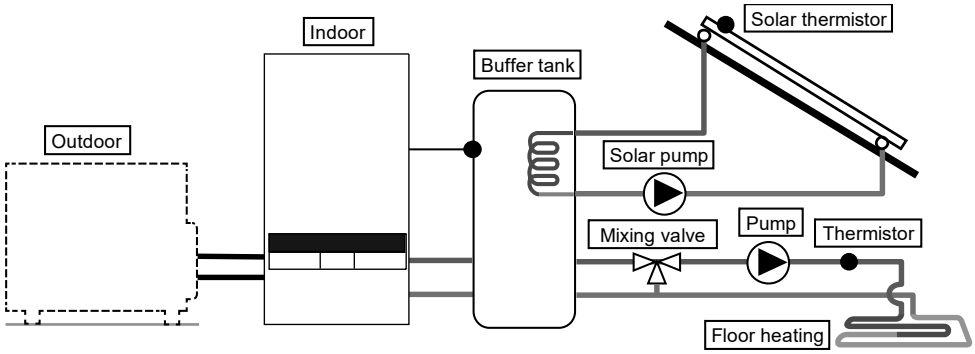


Setting of remote controller

Installer setting
System setup
Optional PCB connectivity - Yes

Buffer Tank connection - Yes
ΔT for buffer tank

Solar connection - Yes
Buffer tank
ΔT turn ON
ΔT turn OFF
Antifreeze
Hi limit

This is an application that connects the buffer tank to the Indoor Unit before connecting to the solar water heater to heat up the tank.
Buffer tank's temperature is detected by buffer tank thermistor (specified by Panasonic).
Solar panel's temperature is detected by solar thermistor (specified by Panasonic).
Buffer tank shall use tank with built-in solar heat exchange coil independently.
During winter season, solar pump for circuit protection will be activated continuously. If does not want to activate the solar pump operation, please use glycol and set the anti-freezing operation start temperature to -20°C.
Heat accumulation operates automatically by comparing the temperature of tank thermistor and solar thermistor.
This system requires Optional PCB (CZ-NS5P).

NOTE : Buffer tank thermistor, Room thermistor zone 1 and External room thermostat zone 1 must be connected to main indoor PCB only.

Boiler connection

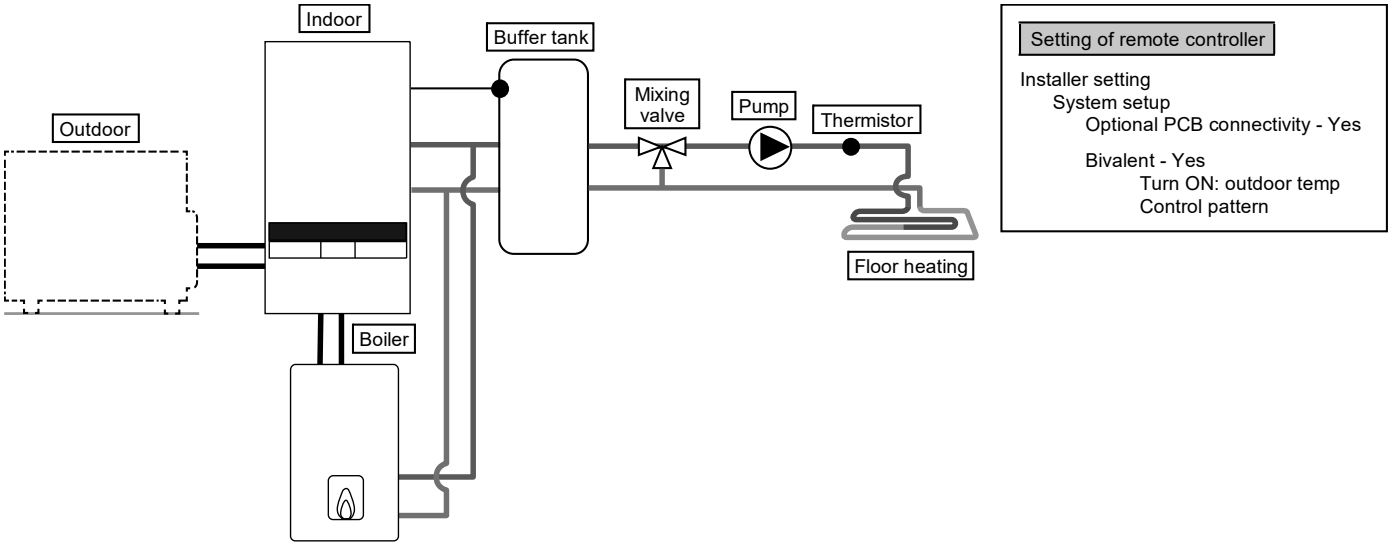


This is an application that connects the boiler to the Indoor Unit, to compensate for insufficient capacity by operate boiler when outdoor temperature drops & heat pump capacity is insufficient.
Boiler is connected parallel with heat pump against heating circuit.
There are 3 modes selectable by remote controller for boiler connection.
Besides that, an application that connects to the DHW tank's circuit to heat up tank's hot water is also possible.
(Operation setting of boiler shall be responsible by installer.)
This system requires Optional PCB (CZ-NS5P).

Depending on the settings of the boiler, it is recommended to install buffer tank as temperature of circulating water may get higher. (It must connect to buffer tank especially when selecting Advanced Parallel setting.)

NOTE : Buffer tank thermistor, Room thermistor zone 1 and External room thermostat zone 1 must be connected to main indoor PCB only.

| ⚠ WARNING |
| --- |
| Panasonic is NOT responsible for incorrect or unsafe situation of the boiler system. |

| ⚠ CAUTION |
| --- |
| Make sure the boiler and its integration in the system complies with applicable legislation.<br>Make sure the return water temperature from the heating circuit to the Indoor Unit does NOT exceed 70°C.<br>Boiler is turned off by safety control when the water temperature of the heating circuit exceed 85°C. |

## 12.3.2 How to Fix Cable

### *12.3.2.1 Connecting with External Device (Optional)*

- **All connections shall** follow to the local national wiring standard.
- It is strongly recommended to use manufacturer-recommended parts and accessories for installation.
- For connection to main PCB ④
  1. Two-way valve shall be spring and electronic type, refer to “Field Supply Accessories” table for details. Valve cable shall be (3 x min 1.5 $mm^2$), of type designation 60245 IEC 57 or heavier, or similarly double insulation sheathed cable.
     * note: - Two-way Valve shall be CE marking compliance component.
     - Maximum load for the valve is 12VA.
  2. Three-way valve shall be spring and electronic type. Valve cable shall be (3 x min 1.5 $mm^2$), of type designation 60245 IEC 57 or heavier, or similarly double insulation sheathed cable.
     * note: - Shall be CE marking compliance component.
     - It shall be directed to heating mode when it is OFF.
     - Maximum load for the valve is 12VA.
  3. Room thermostat zone 1 cable must be (4 or 3 x min 0.5 $mm^2$), of type designation 60245 IEC 57 or heavier cord, or similarly double insulation sheathed cable.
  4. Maximum output power of booster heater shall be ≤ 3 kW. Booster heater cable must be (3 x min 1.5 $mm^2$), of type designation 60245 IEC 57 or heavier.
  5. Extra pump cable shall be (2 x min 1.5 $mm^2$), of type designation 60245 IEC 57 or heavier.
  6. Boiler contact cable/ defrost signal cable shall be (2 x min 0.5 $mm^2$), of type designation 60245 IEC 57 or heavier.
  7. External control shall be connected to 1-pole switch with min 3.0 mm contact gap. Its cable must be (2 x min 0.5 $mm^2$), double insulation layer of PVC-sheathed or rubber-sheathed cable.
     * note: - Switch used shall be CE compliance component.
     - Maximum operating current shall be less than $3A_{rms}$.
  8. Tank sensor shall be resistance type, please refer to below graph for the characteristic and details of sensor. Its cable shall be (2 x min 0.3 $mm^2$), double insulation layer (with insulation strength of min 30V) of PVC-sheathed or rubber-sheathed cable.

Tank Sensor Resistance Vs Temperature

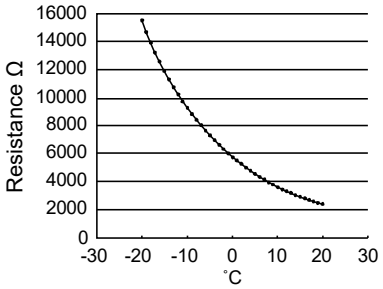


Tank sensor characteristic

  9. Room sensor zone 1 cable shall be (2 x min 0.3 $mm^2$) double insulation layer of PVC-sheathed or rubber-sheathed.
  10. Outdoor air sensor cable shall be (2 x min 0.3 $mm^2$) double insulation layer of PVC-sheathed or rubber-sheathed.
  11. Tank OLP cable must be (2 x min 0.5 $mm^2$), double insulation layer of PVC-sheathed or rubber-sheathed cable.
  12. Buffer tank sensor cable shall be (2 x min 0.3 $mm^2$) double insulation layer of PVC-sheathed or rubber-sheathed.

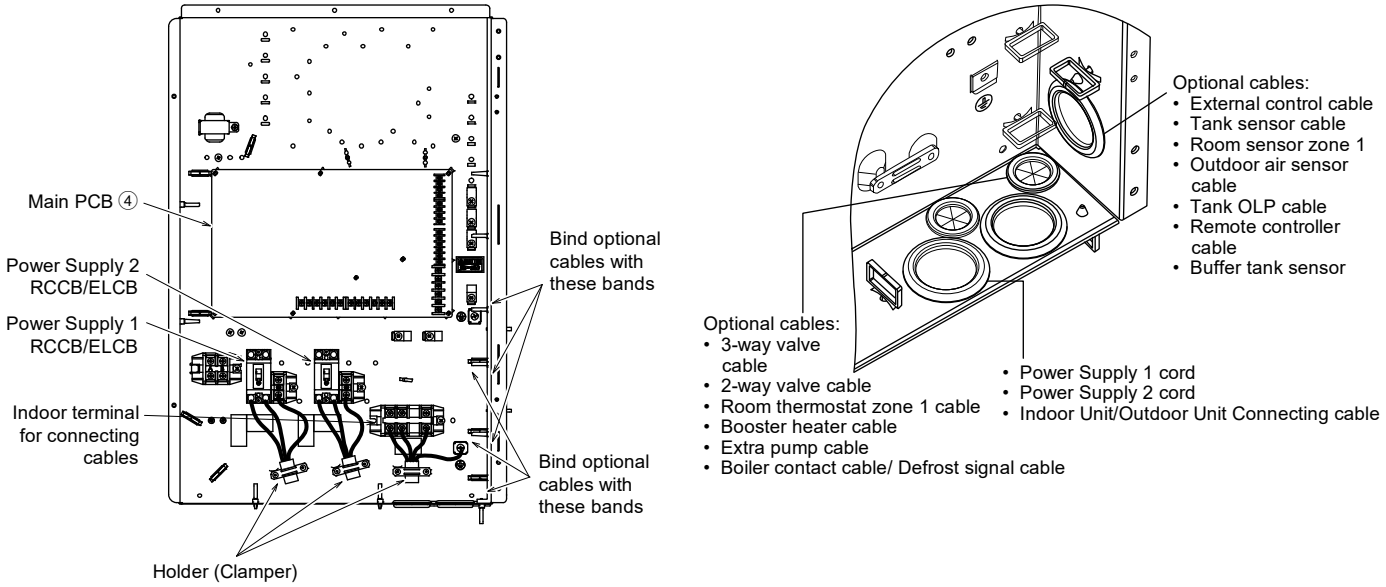


How to guide the optional cables and power supply cord
(view without internal wiring)

- For connection to Optional PCB 9
  1. By connecting Optional PCB, 2 Zone temperature control can be achieved. Please connect mixing valves, water pumps and water temp zone 1 and zone 2 to each terminals in Optional PCB.
     Temperature of each zone can be controlled independently by remote controller.
  2. Pump zone 1 and zone 2 cable shall be (2 x min 1.5 mm²), of type designation 60245 IEC 57 or heavier.
  3. Solar pump cable shall be (2 x min 1.5 mm²), of type designation 60245 IEC 57 or heavier.
  4. Pool pump cable shall be (2 x min 1.5 mm²), of type designation 60245 IEC 57 or heavier.
  5. Room thermostat zone 2 cable shall be (4 x min 0.5 mm²), of type designation 60245 IEC 57 or heavier.
  6. Mixing valve zone 1 and zone 2 cable shall be (3 x min 1.5 mm²), of type designation 60245 IEC 57 or heavier.
  7. Room sensor zone 1 and zone 2 cable shall be (2 x min 0.3 mm²), double insulation layer (with insulation strength of minimum 30V) of PVC-sheathed or rubber-sheathed cable.
  8. Pool water sensor and solar sensor cable shall be (2 x min 0.3 mm²), double insulation layer (with insulation strength of minimum 30V) of PVC-sheathed or rubber-sheathed cable.
  9. Water sensor zone 1 and zone 2 cable shall be (2 x min 0.3 mm²), double insulation layer of PVC-sheathed or rubber-sheathed cable.
  10. Demand signal cable shall be (2 x min 0.3 mm²), double insulation layer of PVC-sheathed or rubber-sheathed cable.
  11. SG signal cable shall be (3 x min 0.3 mm²), double insulation layer of PVC-sheathed or rubber-sheathed cable.
  12. Heat/Cool switch cable shall be (2 x min 0.3 mm²), double insulation layer of PVC-sheathed or rubber-sheathed cable.
  13. External compressor switch cable shall be (2 x min 0.3 mm²), double insulation layer of PVC-sheathed or rubber-sheathed cable.

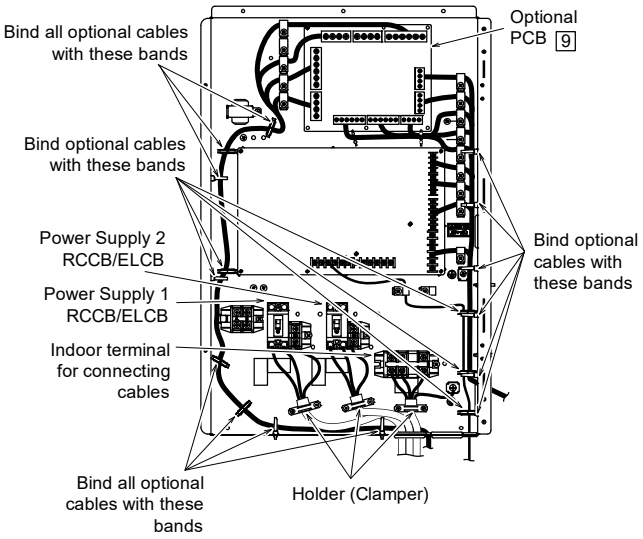


How to guide the optional cables and power supply cord
(view without internal wiring)

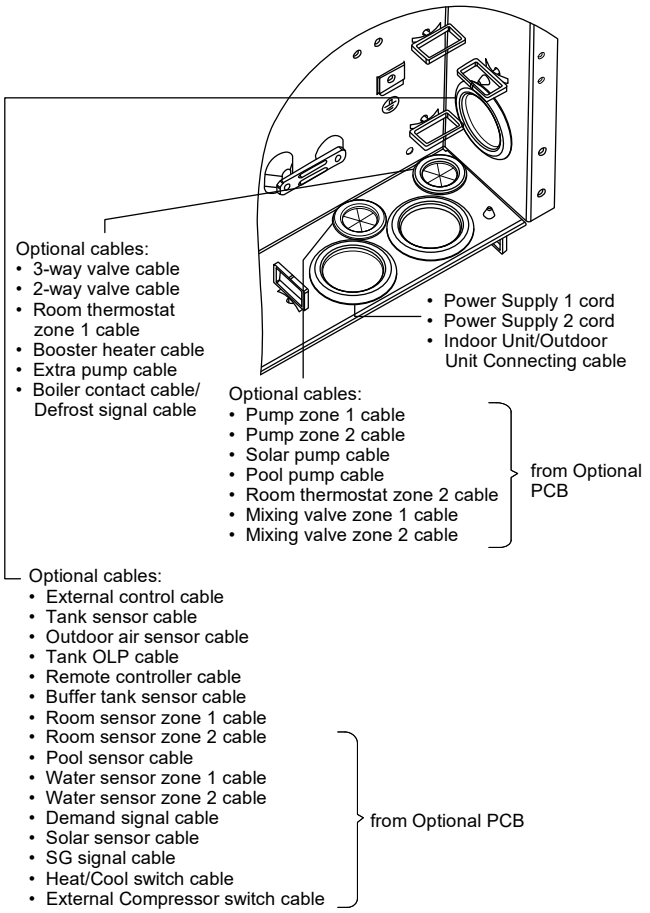


| Terminal screw on PCB | Maximum tightening torque cN•m {kgf•cm} |
|---|---|
| M3 | 50 {5.1} |
| M4 | 120 {12.24} |

### 12.3.2.2 Connecting Cables Length

When connecting cables between Indoor Unit and external devices, the length of the said cables must not exceed the maximum length as shown in the table.

| External device | Maximum cables length (m) |
|---|---|
| Two-way valve | 50 |
| Three-way valve | 50 |
| Mixing valve | 50 |
| Room thermostat | 50 |
| Booster heater | 50 |
| Extra pump | 50 |
| Solar pump | 50 |
| Pool pump | 50 |
| Pump | 50 |
| Boiler contact / Defrost signal | 50 |
| External control | 50 |
| Tank sensor | 30 |
| Room sensor | 30 |
| Outdoor air sensor | 30 |
| Tank OLP | 30 |
| Buffer tank sensor | 30 |
| Pool water sensor | 30 |
| Solar sensor | 30 |
| Water sensor | 30 |
| Demand signal | 50 |
| SG signal | 50 |
| Heat/Cool switch | 50 |
| External compressor switch | 50 |

### 12.3.2.3 Connection of the Main PCB

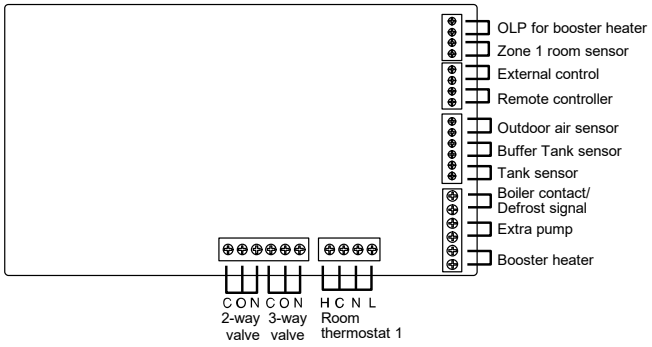


- Signal inputs

| | |
|---|---|
| Optional Thermostat | L N =AC230V, Heat, Cool=Thermostat heat, Cool terminal |
| OLP for booster heater | Dry contact Vcc-Bit1, Vcc-Bit2 open/short (System setup necessary)<br>It is connected to the safety device (OLP) of DHW tank. |
| External control | Dry contact Open=not operate, Short=operate (System setup necessary)<br>Able to turn ON/OFF the operation by external switch |
| Remote controller | Connected (Please use 2 cores wire for relocation and extension. Total cable length shall be 50m or less.) |

- Outputs

| | |
|---|---|
| 3-way valve | AC230V N=Neutral Open, Close=direction (For circuit switching when connected to DHW tank) |
| 2-way valve | AC230V N=Neutral Open, Close (Prevent water circuit pass through during cooling mode) |
| Extra pump | AC230V (Used when Indoor Unit pump capacity is insufficient) |
| Booster heater | AC230V (Used when using booster heater in DHW tank) |
| Boiler contact / Defrost signal | Dry contact (System setup necessary) |

- Thermistor inputs

| | |
|---|---|
| Zone 1 room sensor | PAW-A2W-TSRT |
| Outdoor air sensor | PAW-A2W-TSOD (Total cable length shall be 30m or less) |
| Tank sensor | Please use Panasonic specified part |
| Buffer tank sensor | PAW-A2W-TSBU |

### 12.3.2.4 Connection of Optional PCB (CZ-NS5P)

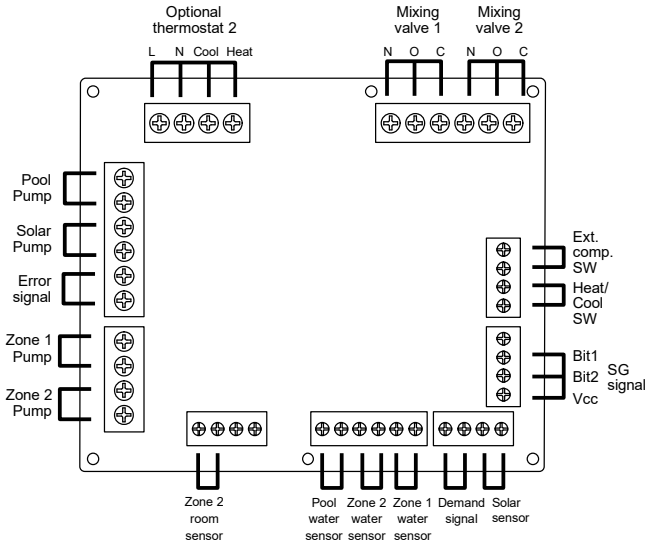


- Signal inputs

| | |
|---|---|
| Optional Thermostat | L N =AC230V, Heat, Cool=Thermostat heat, Cool terminal |
| SG signal | Dry contact Vcc-Bit1, Vcc-Bit2 open/short (System setup necessary)<br>Switching SW (Please connect to the 2 contacts controller) |
| Heat/Cool SW | Dry contact Open=Heat, Short=Cool (System setup necessary) |
| External comp. SW | Dry contact Open=Comp.OFF, Short=Comp.ON (System setup necessary) |
| Demand signal | DC 0~10V (System setup necessary)<br>Please connect to the DC 0~10V controller. |

- Outputs

| | | |
|---|---|---|
| Mixing valve | AC230V N=Neutral Open, Close=mixture direction Operating time: 30s~120s | AC230V, 6VA |
| Pool pump | AC230V | AC 230V, 0.6 A max |
| Solar pump | AC230V | AC 230V, 0.6 A max |
| Zone pump | AC230V | AC 230V, 0.6 A max |

- Thermistor inputs

| | |
|---|---|
| Zone room sensor | PAW-A2W-TSRT |
| Pool water sensor | PAW-A2W-TSHC |
| Zone water sensor | PAW-A2W-TSHC |
| Solar sensor | PAW-A2W-TSSO |

### 12.3.2.5 Recommended External Device Specification

- This section explains about the external devices (optional) recommended by Panasonic. Please always ensure to use the correct external device during system installation.
- For optional sensor.
  1. Buffer tank sensor: PAW-A2W-TSBU
     Use for measurement of the buffer tank temperature.
     Insert the sensor into the sensor pocket and paste it on the buffer tank surface.

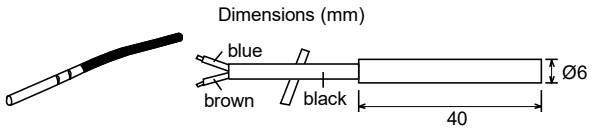


  2. Zone water sensor: PAW-A2W-TSHC
     Use to detect the water temperature of the control zone.
     Mount it on the water piping by using the stainless steel metal strap and contact paste (both are included).

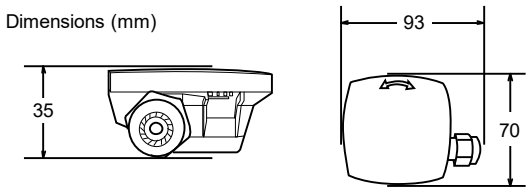

3. Outdoor sensor: PAW-A2W-TSOD
   If the installation location of the outdoor unit is exposed to direct sunlight, the outdoor air temperature sensor will be unable to measure the actual outdoor ambient temperature correctly.
   In this case, optional outdoor temperature sensor can be fixed at a suitable location to more accurately measure ambient temperature.

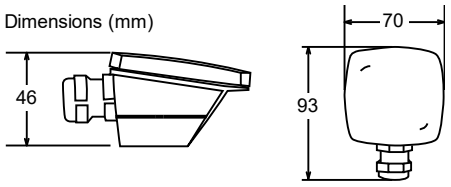


4. Room sensor: PAW-A2W-TSRT
   Install the room temperature sensor to the room which requires room temperature control.

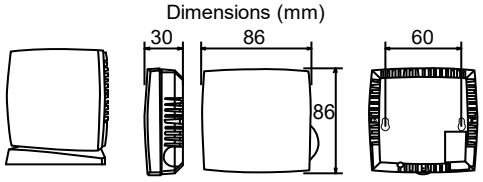


5. Solar sensor: PAW-A2W-TSSO
   Use for measurement of the solar panel temperature.
   Insert the sensor into the sensor pocket and paste it on the solar panel surface.

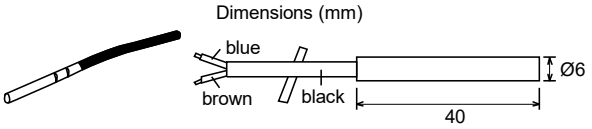


6. Please refer to the table below for sensor characteristic of the sensors mentioned above.

| Temperature (°C) | Resistance (kΩ) |
|---|---|
| 30 | 5.326 |
| 25 | 6.523 |
| 20 | 8.044 |
| 15 | 9.980 |
| 10 | 12.443 |
| 5 | 15.604 |
| 0 | 19.70 |
| -5 | 25.05 |
| -10 | 32.10 |
| -15 | 41.45 |
| -20 | 53.92 |
| -25 | 70.53 |
| -30 | 93.05 |
| -35 | 124.24 |
| -40 | 167.82 |

| Temperature (°C) | Resistance (kΩ) |
|---|---|
| 150 | 0.147 |
| 140 | 0.186 |
| 130 | 0.236 |
| 120 | 0.302 |
| 110 | 0.390 |
| 100 | 0.511 |
| 90 | 0.686 |
| 80 | 0.932 |
| 70 | 1.279 |
| 65 | 1.504 |
| 60 | 1.777 |
| 55 | 2.106 |
| 50 | 2.508 |
| 45 | 3.003 |
| 40 | 3.615 |
| 35 | 4.375 |

- For optional pump.
  Power supply: AC230V/50Hz, <500W
  Recommended part: Yonos Pico 1.0 25/1-8: made by Wilo

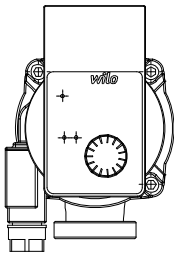


- For optional mixing valve.
  Power supply: AC230V/50Hz (input open/output close)
  Operating time: 30s~120s
  Recommended part: 167032: made by Caleffi

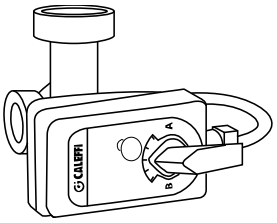


**⚠ WARNING**

This section is for authorized and licensed electrician/water system installer only. Work behind the front plate secured by screws must only be carried out under supervision of qualified contractor, installation engineer or service person.

### *12.3.2.6 Network Adaptor 6 Installation (Optional)*

1. **Open the Control Board Cover ⑥, then connect the cable included with this adaptor to the CN-CNT connector on the printed circuit board.**
   - If an Optional PCB has been install in the Indoor Unit, connect the CN-CNT connector to Optional PCB 9 .
2. **Insert a flat head screwdriver into the slot on the top of the adaptor and remove the cover. Connect the other end of the CN-CNT cable connector to the connector inside the adaptor.**

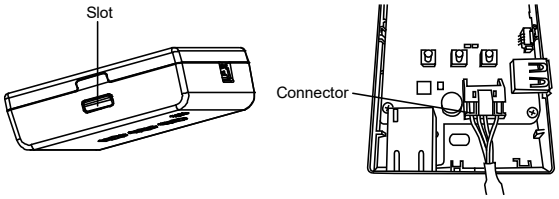


3. **Pull the CN-CNT cable through the hole in the bottom of the adaptor and re-attach the front cover to the back cover.**

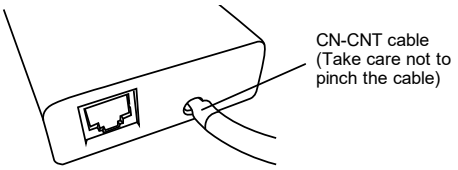


4. **Fix the Network Adaptor 6 to Network Adaptor Holder.**
   Guide the cable as shown in the diagram so that external forces cannot act on the connector in the adaptor.

   Connection examples:

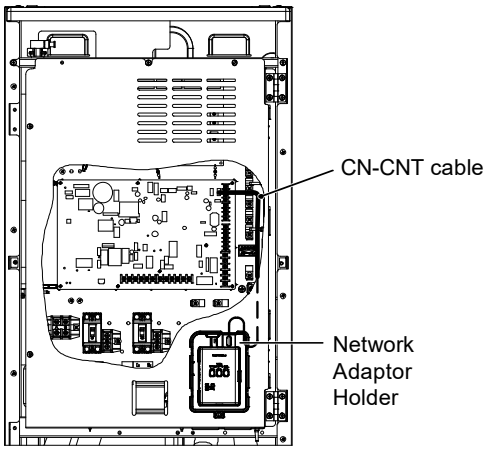


Without Optional PCB

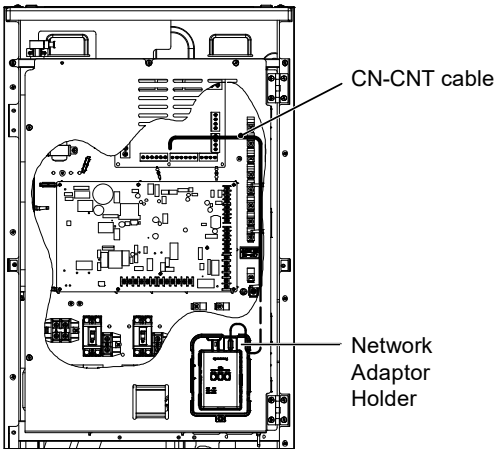


With Optional PCB

## 12.3.3 System Installation

### *12.3.3.1 Remote Controller Outline*

The LCD display as shown in this manual are for instructional purpose only, and may differ from the actual unit.

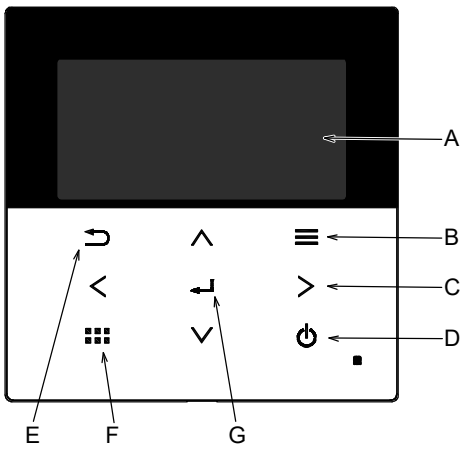


| | Name | Function |
|---|---|---|
| A: | Main screen | Display information |
| B: | Menu | Open/Close main menu |
| C: | Triangle (Move) | Select or change item |
| D: | Operate | Start/Stop operation |
| E: | Back | Back to previous item |
| F: | Quick Menu | Open/Close Quick menu |
| G: | OK | Confirm |

LCD Display
(Actual - Dark background with white icons)

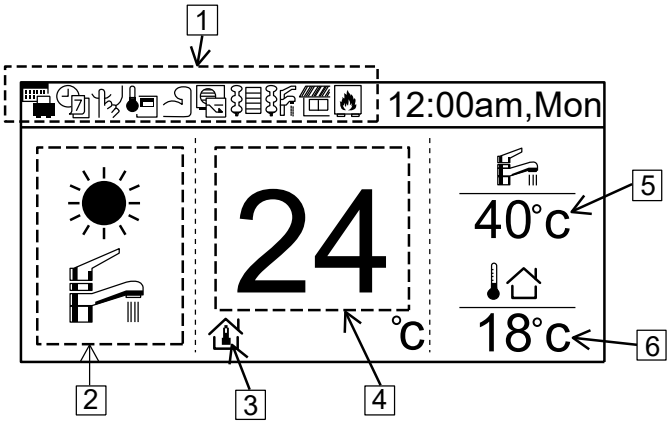


| | Name | Function |
|---|---|---|
| 1: | Function icon | Display set function/status |

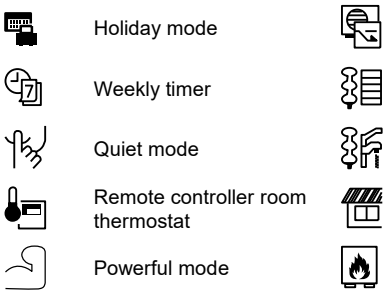

| | |
|---|---|
| Holiday mode | Demand control |
| Weekly timer | Room heater |
| Quiet mode | Tank heater |
| Remote controller room thermostat | Solar |
| Powerful mode | Boiler |

| | | |
|---|---|---|
| 2: | Mode | Display set mode/current status of mode |

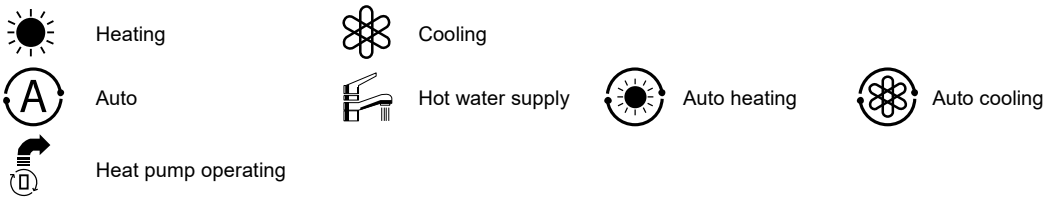

| | | | | |
|---|---|---|---|---|
| Heating | Cooling | | | |
| Auto | Hot water supply | Auto heating | Auto cooling | |
| Heat pump operating | | | | |

| | | | | | | | |
|---|---|---|---|---|---|---|---|
| 3: | Temp setting | Set room temp | Compensation curve | Set direct water temp | Set pool temp |

| | | |
|---|---|---|
| 4: | Display Heat temp | Display current heating temperature (it is set temperature when enclosed by line) |
| 5: | Display tank temp | Display current tank temperature (it is set temperature when enclosed by line) |
| 6: | Outdoor temp | Display outdoor temp |

## First time of power ON (Start of installation)

Initialization 12:00pm,Mon

Initializing.

When power is ON, firstly initialization screen appears (10 sec)

12:00pm,Mon

[⏻] Start

When initialization screen ends, it turns to normal screen.

Language 12:00pm,Mon

ENGLISH
FRANÇAIS
DEUTSCH
ITALIANO

▼ Select [↵] Confirm

When any button is pressed, language setting screen appears.
(NOTE) If initial setting is not performed, it does not go into menu.

When there are two remote controllers installed from the beginning, the first remote controller to set and confirm language will be recognised as main remote controller.

Set language & confirm

Clock format 12:00pm,Mon

24h
▼
am/pm

▼ Select [↵] Confirm

When language is set, setting screen of time display appears (24h/am/pm)

Set time display & confirm

Date & time 12:00,Mon

Year/Month/Day Hour : Min

▲
2022 / 01 / 01 12 : 00
▼

▲▼▶ Select [↵] Confirm

YY/MM/DD/Time setup screen appears

Set YY/MM/DD/Time & confirm

Front grille 12:00,Sat

Is O/D front grille fixed?

No
Yes

▼ Select [↵] Confirm

If set No & confirm, a caution message will be displayed to ensure outdoor front grille is installed before proceed to operate the unit.

➡ Caution
To prevent injury, fix front grille before ope.
[↩] Close

Set Yes & confirm if outdoor front grille has been installed

12:00,Sat

[⏻] Start

Back to initial screen

Press menu, select Installer setup

Main Menu 12:00,Sat

System check
Personal setup
Service contact
Installer setup

▲ Select [↵] Confirm

Confirm to go into Installer setup

### 12.3.3.2 Installer Setup

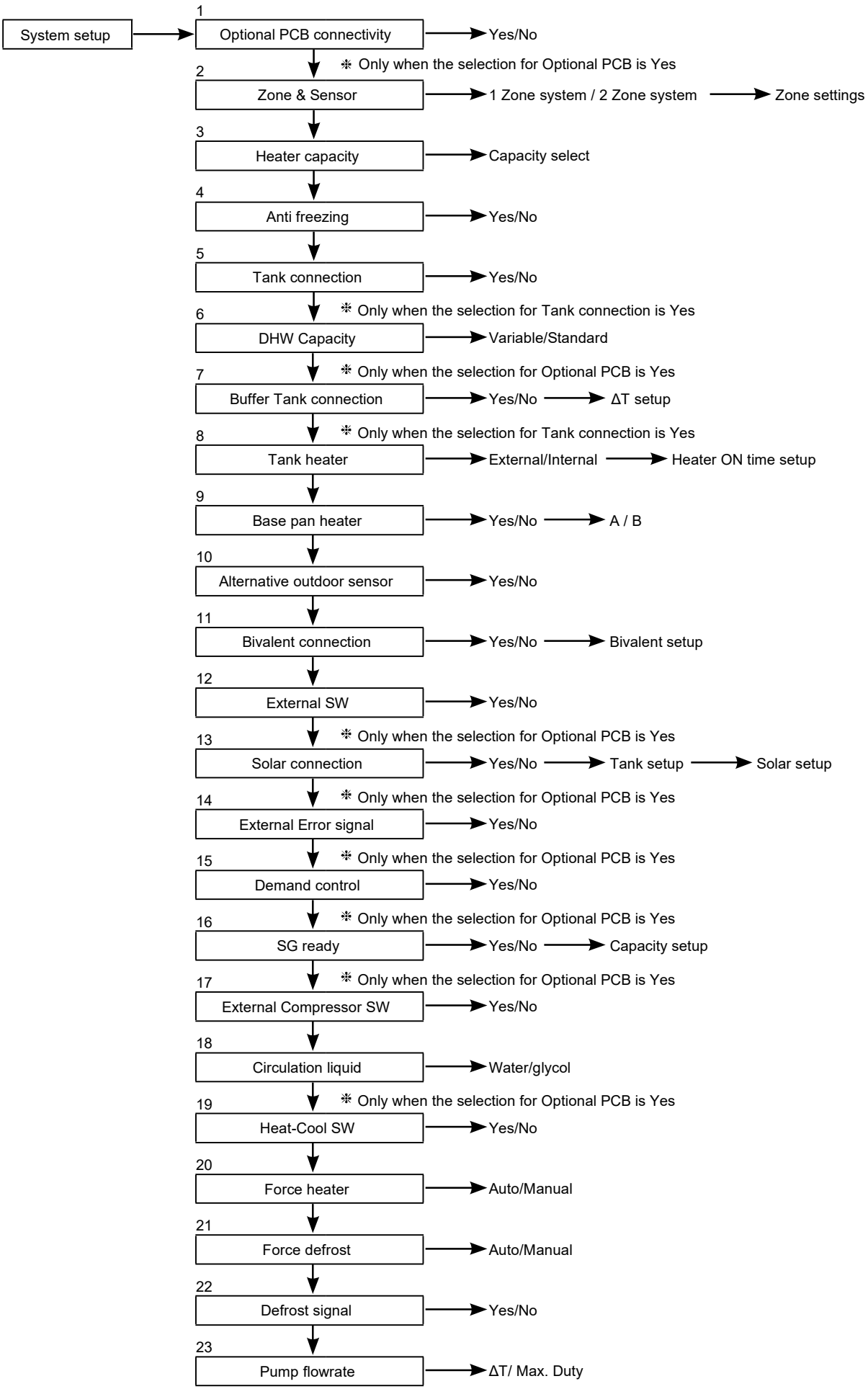

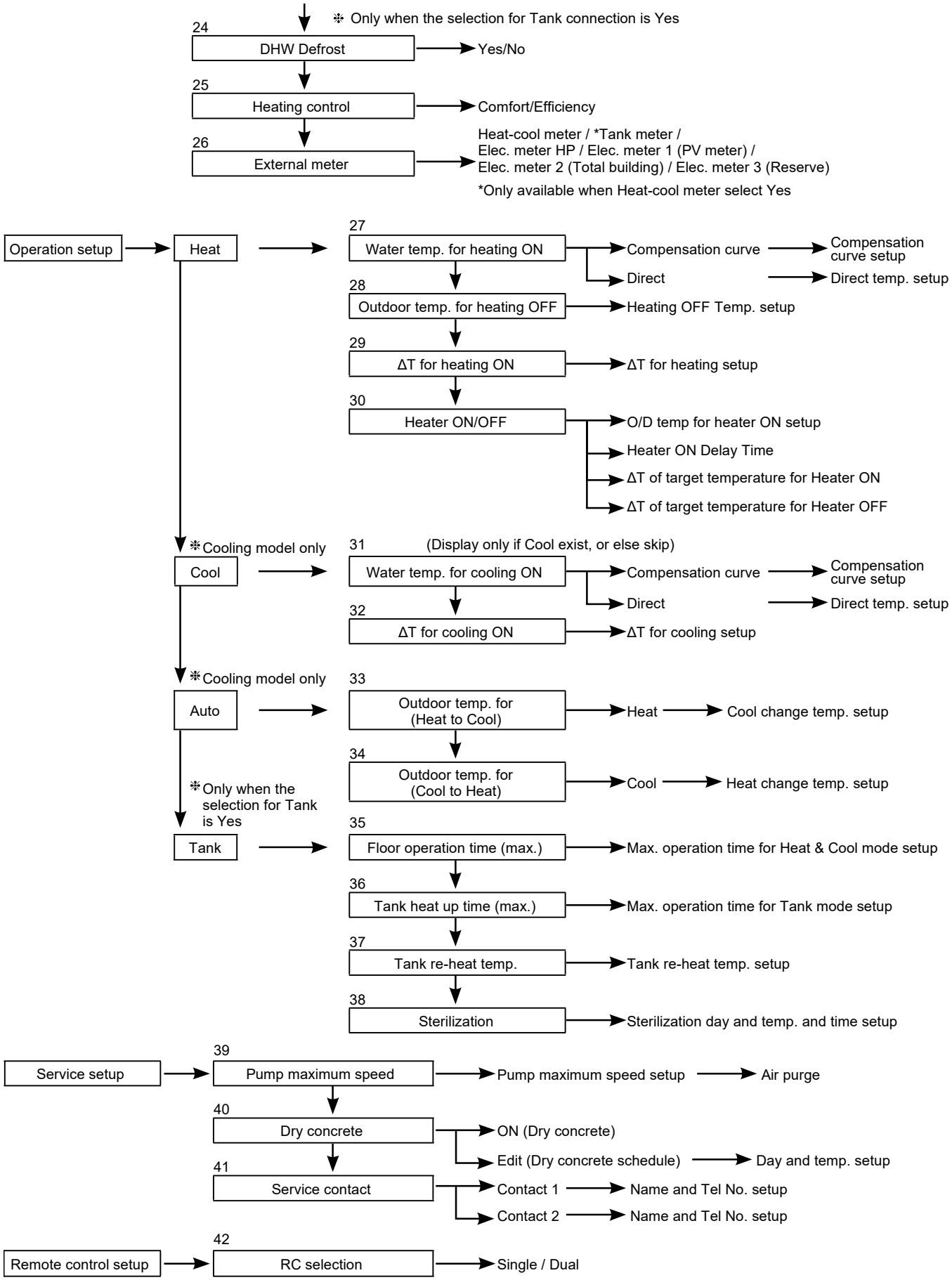
❊ Only when the selection for Tank connection is Yes
24
DHW Defrost
Yes/No
25
Heating control
Comfort/Efficiency
26
External meter
Heat-cool meter / *Tank meter /
Elec. meter HP / Elec. meter 1 (PV meter) /
Elec. meter 2 (Total building) / Elec. meter 3 (Reserve)
*Only available when Heat-cool meter select Yes
Operation setup
Heat
27
Water temp. for heating ON
Compensation curve
Compensation curve setup
Direct
Direct temp. setup
28
Outdoor temp. for heating OFF
Heating OFF Temp. setup
29
ΔT for heating ON
ΔT for heating setup
30
Heater ON/OFF
O/D temp for heater ON setup
Heater ON Delay Time
ΔT of target temperature for Heater ON
ΔT of target temperature for Heater OFF
❊Cooling model only
Cool
31
(Display only if Cool exist, or else skip)
Water temp. for cooling ON
Compensation curve
Compensation curve setup
Direct
Direct temp. setup
32
ΔT for cooling ON
ΔT for cooling setup
❊Cooling model only
Auto
33
Outdoor temp. for (Heat to Cool)
Heat
Cool change temp. setup
34
Outdoor temp. for (Cool to Heat)
Cool
Heat change temp. setup
❊Only when the selection for Tank is Yes
Tank
35
Floor operation time (max.)
Max. operation time for Heat & Cool mode setup
36
Tank heat up time (max.)
Max. operation time for Tank mode setup
37
Tank re-heat temp.
Tank re-heat temp. setup
38
Sterilization
Sterilization day and temp. and time setup
Service setup
39
Pump maximum speed
Pump maximum speed setup
Air purge
40
Dry concrete
ON (Dry concrete)
Edit (Dry concrete schedule)
Day and temp. setup
41
Service contact
Contact 1
Name and Tel No. setup
Contact 2
Name and Tel No. setup
Remote control setup
42
RC selection
Single / Dual

### 12.3.3.3 System Setup

**1. Optional PCB connectivity** | Initial setting: No

If function below is necessary, please purchase and install Optional PCB.
Please select Yes after installing Optional PCB.

- 2-zone control
- Pool
- Solar
- External error signal output
- Demand control
- SG ready
- Stop heat source unit by external SW

```
System setup                    12:00am,Mon
Optional PCB connectivity
Zone & Sensor
Heater capacity
Anti freezing
 Select                 [↵] Confirm
```

**2. Zone & Sensor** | Initial setting: Room and Water temp.

If no Optional PCB connectivity
Select sensor of room temperature control from the following 3 items
① Water temperature (circulation water temperature)
② Room thermostat (Internal or External)
③ Room thermistor

When there is Optional PCB connectivity
① Select either 1 zone control or 2 zone control.
If it is 1 zone, select either room or pool, select sensor
If it is 2 zone, after select sensor of zone 1, select either room or pool for zone 2, select sensor
(NOTE) In 2 zone system, pool function can be set at zone 2 only.

```
System setup                    12:00am,Mon
Optional PCB connectivity
Zone & Sensor
Heater capacity
Anti freezing
 Select                 [↵] Confirm
```

**3. Heater capacity** | Initial setting: Depend on model

If there is built-in Heater, set the selectable heater capacity.

(NOTE) There are models which cannot select heater.

```
System setup                    12:00am,Mon
Optional PCB connectivity
Zone & Sensor
Heater capacity
Anti freezing
 Select                 [↵] Confirm
```

**4. Anti freezing** | Initial setting: Yes

Operate anti-freezing of water circulation circuit.
If select Yes, when the water temperature is reaching its freezing temperature, the circulation pump will start up. If the water temperature does not reach the pump stop temperature, back-up heater will be activated.

(NOTE) If set No, when the water temperature is reaching its freezing temperature or below 0°C, the water circulation circuit may freeze and cause malfunction.

```
System setup                    12:00am,Mon
Optional PCB connectivity
Zone & Sensor
Heater capacity
Anti freezing
 Select                 [↵] Confirm
```

**5. Tank connection** | Initial setting: No

Select whether it is connected to hot water tank or not.
If set Yes, it becomes setting that uses hot water function.
Hot water temperature of tank can be set from main screen.

```
System setup                    12:00am,Mon
Zone & Sensor
Heater capacity
Anti freezing
Tank connection
 Select                 [↵] Confirm
```

**6. DHW Capacity** | Initial setting: Variable

Variable DHW capacity setting normally run with efficient boiling which is energy saving heating. But while hot water usage high and tank water temperature low, variable DHW mode will run with fast heat up which heat up the tank with high heating capacity.
If standard DHW capacity setting is selected, heat pump run with heating rated capacity at tank heat up operation.

❈ Only when the selection for Tank connection is Yes

```
System setup                    12:00am,Mon
Zone & Sensor
Heater capacity
Anti freezing
DHW Capacity
 Select                 [↵] Confirm
```

**7. Buffer Tank connection** | Initial setting: No

Select whether it is connected to buffer tank for heating or not.
If buffer tank is used, please set Yes.
Connect buffer tank thermistor and set, ΔT (ΔT use to increase primary side temp against secondary side target temp).
(NOTE) Does not display if there is no Optional PCB.
If the buffer tank capacity is not so large, please set larger value for ΔT.

| System setup | 12:00am,Mon |
|---|---|
| Heater capacity | |
| Anti freezing | |
| Tank connection | |
| Buffer tank connection | |
| Select | [↵] Confirm |

**8. Tank heater** | Initial setting: Internal

Select to use either built-in heater or external heater as heater for hot water tank.
If heater is installed on tank, please select External.

(NOTE) Does not display if there is no tank for hot water supply.

Please set "Tank heater" to "ON" in the "Function setup" from remote controller when using heater to boil the tank.

| System setup | 12:00am,Mon |
|---|---|
| Anti freezing | |
| Tank connection | |
| Buffer tank connection | |
| Tank heater | |
| Select | [↵] Confirm |

External A setting which is using booster heater installed on DHW tank to boil the tank.
The permissible heater capacity is 3kW and below.
The operation to boil the tank with heater is as below.
In addition, be sure to set suitable "Tank heater: ON time"

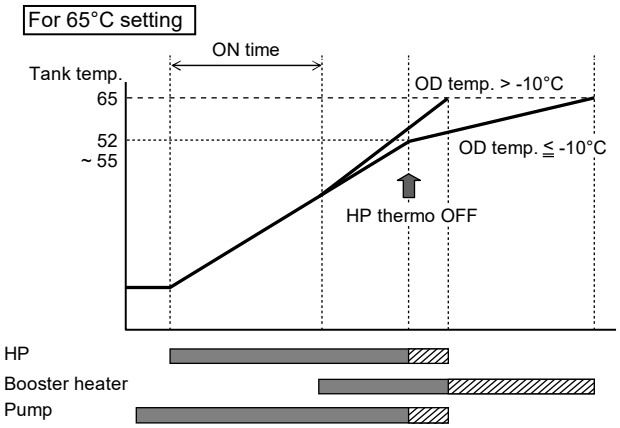


Internal A setting which is using backup heater of Indoor Unit to boil the tank.
The operation to boil the tank with heater is as below.

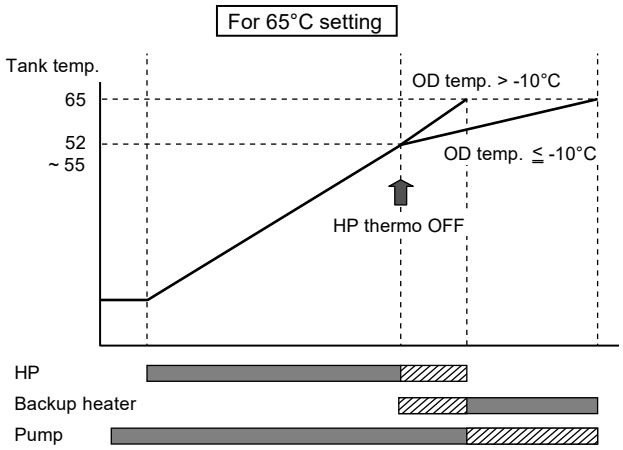


**9. Base pan heater** | Initial setting: No

Select whether Base pan heater is installed or not.
If set Yes, select to use either heater A or B.

A: Turn on Heater when heating with defrost operation only
B: Turn on Heater at heating

| System setup | 12:00am,Mon |
|---|---|
| Tank connection | |
| Buffer tank connection | |
| Tank heater | |
| Base pan heater | |
| Select | [↵] Confirm |

**10. Alternative outdoor sensor** | Initial setting: No

Set Yes if outdoor sensor is installed.
Controlled by optional outdoor sensor without reading the outdoor sensor of heat pump unit.

| System setup | 12:00am,Mon |
|---|---|
| Buffer tank connection | |
| Tank heater | |
| Base pan heater | |
| Alternative outdoor sensor | |
| Select | [↵] Confirm |

**11. Bivalent connection** | Initial setting: No

| System setup | 12:00am,Mon |
|---|---|
| Tank heater | |
| Base pan heater | |
| Alternative outdoor sensor | |
| Bivalent connection | |
| ⬍ Select | [↵] Confirm |

Set if heat pump linked with boiler operation.
Connect the start signal of the boiler in boiler contact terminal (main PCB).
Set Bivalent connection to YES.
After that, please begin setting according to remote controller instruction.
Boiler icon will be displayed on remote controller top screen.

After Bivalent connection Set YES, there is two option of control pattern to be select, (SG Ready / Auto)

1) SG ready (Only available to set when Optional PCB set to YES)
   - SG Ready input from Optional PCB terminal control ON/OFF of boiler and heat pump as below condition

| SG signal | | Operation pattern |
|---|---|---|
| Vcc-bit1 | Vcc-bit2 | |
| Open | Open | Heat pump OFF, Boiler OFF |
| Short | Open | Heat pump ON, Boiler OFF |
| Open | Short | Heat pump OFF, Boiler ON |
| Short | Short | Heat pump ON, Boiler ON |

* This bivalent SG ready input is sharing same terminal as [16. SG ready] connection. Only one of these two setting can be set at the same time. When one is set, another setting will reset to not set.

2) Auto (If Optional PCB no Set, bivalent control pattern will set to this auto as default value)

There are 3 different modes in the boiler operation. Movement of each modes are shown below.
① Alternative (switch to boiler operation when drops below setting temperature)
② Parallel (allow boiler operation when drops below setting temperature)
③ Advanced Parallel (able to slightly delay boiler operation time of parallel operation)

When the boiler operation is “ON”, “boiler contact” is “ON”, “_”(underscore) will be displayed below the boiler icon.
Please set target temperature of boiler to be the same as heat pump temperature.
When boiler temperature is higher than heat pump temperature, zone temperature cannot be achieved if mixing valve is not installed.
This product only allows one signal to control the boiler operation. Operation setting of boiler shall be responsible by installer.

**Alternative mode**

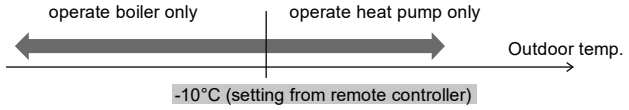


**Parallel mode**

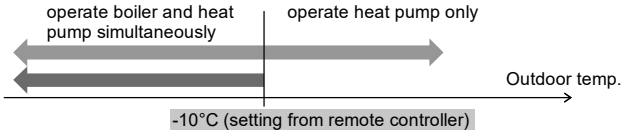


**Advanced Parallel mode**

**For heating**

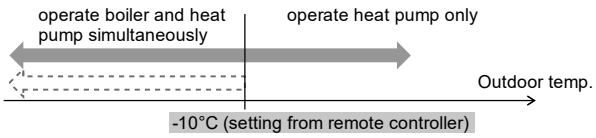


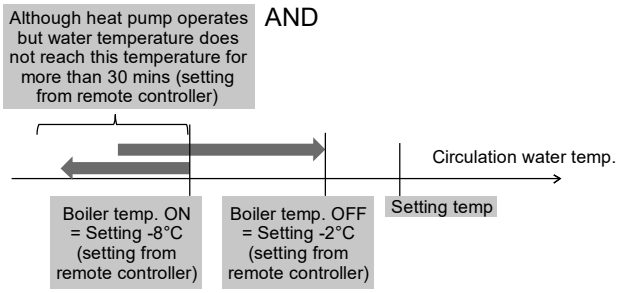


**For DHW tank**

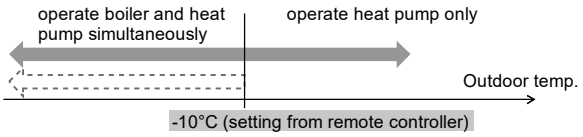


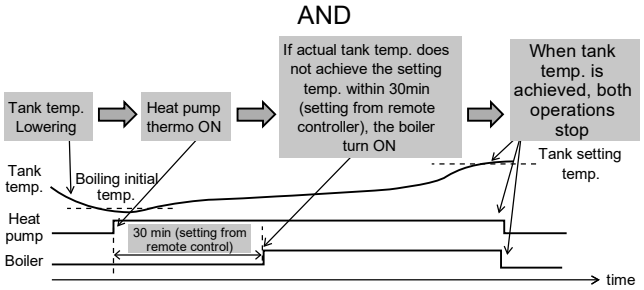


In Advanced Parallel mode, setting for both heating and tank can be made simultaneously. During operation of “Heating/Tank” mode, when each time the mode is switched, the boiler output will be reset to OFF. Please have good understanding on the boiler control characteristic in order to select the optimal setting for the system.

3) Smart

There are Energy price (both electricity and boiler) and Schedule to be set on remote controller.
Operation setting of Energy price and Schedule shall be responsible by installer.
Based on these settings, system will calculate the final price for both electricity and boiler.
When final price of Electricity is lower than Boiler's, heat pump will operate.
When final price of Electricity is higher than Boiler's, boiler will operate.

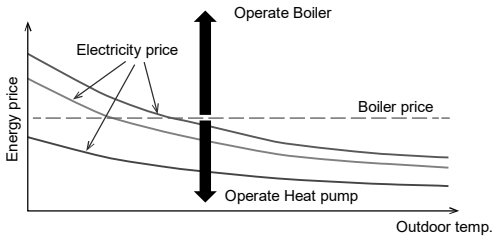

**12. External SW** | Initial setting: No

Able to turn ON/OFF the operation by external switch.

| System setup | 12:00am,Mon |
|---|---|
| Base pan heater | |
| Alternative outdoor sensor | |
| Bivalent connection | |
| External SW | |
| Select | [↵] Confirm |

**13. Solar connection** | Initial setting: No

Set when solar water heater is installed.

Setting include items below.
① Set either buffer tank or DHW tank for connection with solar water heater.
② Set temperature difference between solar panel thermistor and buffer tank or DHW tank thermistor to operate the solar pump.
③ Set temperature difference between solar panel thermistor and buffer tank or DHW tank thermistor to stop the solar pump.
④ Anti-freezing operation start temperature (please change setting based on usage of glycol.)
⑤ Solar pump stop operation when it exceeds high limit temperature (when tank temperature exceed designated temperature (70~90°C))

| System setup | 12:00am,Mon |
|---|---|
| Alternative outdoor sensor | |
| Bivalent connection | |
| External SW | |
| Solar connection | |
| Select | [↵] Confirm |

**14. External Error Signal** | Initial setting: No

Set when external error display unit is installed.
Turn on Dry Contact SW when error happened.

(NOTE) Does not display when there is no Optional PCB.
When error occurs, error signal will be ON.
After turn off “close” from the display, error signal will still remain ON.

| System setup | 12:00am,Mon |
|---|---|
| Bivalent connection | |
| External SW | |
| Solar connection | |
| External error signal | |
| Select | [↵] Confirm |

**15. Demand control** | Initial setting: No

Set when there is demand control.
Adjust terminal voltage within 1 ~ 10 V to change the operating current limit.

(NOTE) Does not display when there is no Optional PCB.

| System setup | 12:00am,Mon |
|---|---|
| External SW | |
| Solar connection | |
| External error signal | |
| Demand control | |
| Select | [↵] Confirm |

| Analog input [v] | Rate [%] | | |
|---|---|---|---|
| 0.0 | not activate | | |
| 0.1 ~ 0.6 | | | |
| 0.7 | 10 | not activate | |
| 0.8 | | | |
| 0.9 ~ 1.1 | 10 | | |
| 1.2 | 15 | 10 | |
| 1.3 | | | |
| 1.4 ~ 1.6 | 15 | | |
| 1.7 | 20 | 15 | |
| 1.8 | | | |
| 1.9 ~ 2.1 | 20 | | |
| 2.2 | 25 | 20 | |
| 2.3 | | | |
| 2.4 ~ 2.6 | 25 | | |
| 2.7 | 30 | 25 | |
| 2.8 | | | |
| 2.9 ~ 3.1 | 30 | | |
| 3.2 | 35 | 30 | |
| 3.3 | | | |
| 3.4 ~ 3.6 | 35 | | |
| 3.7 | 40 | 35 | |
| 3.8 | | | |

| Analog input [v] | Rate [%] | | |
|---|---|---|---|
| 3.9 ~ 4.1 | 40 | | |
| 4.2 | 45 | 40 | |
| 4.3 | | | |
| 4.4 ~ 4.6 | 45 | | |
| 4.7 | 50 | 45 | |
| 4.8 | | | |
| 4.9 ~ 5.1 | 50 | | |
| 5.2 | 55 | 50 | |
| 5.3 | | | |
| 5.4 ~ 5.6 | 55 | | |
| 5.7 | 60 | 55 | |
| 5.8 | | | |
| 5.9 ~ 6.1 | 60 | | |
| 6.2 | 65 | 60 | |
| 6.3 | | | |
| 6.4 ~ 6.6 | 65 | | |
| 6.7 | 70 | 65 | |
| 6.8 | | | |
| 6.9 ~ 7.1 | 70 | | |
| 7.2 | 75 | 70 | |
| 7.3 | | | |

| Analog input [v] | Rate [%] | | |
|---|---|---|---|
| 7.4 ~ 7.6 | 75 | | |
| 7.7 | 80 | 75 | |
| 7.8 | | | |
| 7.9 ~ 8.1 | 80 | | |
| 8.2 | 85 | 80 | |
| 8.3 | | | |
| 8.4 ~ 8.6 | 85 | | |
| 8.7 | 90 | 85 | |
| 8.8 | | | |
| 8.9 ~ 9.1 | 90 | | |
| 9.2 | 95 | 90 | |
| 9.3 | | | |
| 9.4 ~ 9.6 | 95 | | |
| 9.7 | 100 | 95 | |
| 9.8 | | | |
| 9.9 ~ | 100 | | |

*A minimum operating current is applied on each model for protection purpose.
*0.2 voltage hysteresis is provided.
* The value of voltage after 2nd decimal point are cut off.

**16. SG ready** | Initial setting: No

System setup 12:00am,Mon
Solar connection
External error signal
Demand control
SG ready
Select [↵] Confirm

Switch operation of heat pump by open-short of 2 terminals.
Setting belows are possible

| SG signal | | Working pattern |
|---|---|---|
| Vcc-bit1 | Vcc-bit2 | |
| Open | Open | Normal |
| Short | Open | Heat pump and Heater OFF |
| Open | Short | Capacity 1 |
| Short | Short | Capacity 2 |

Capacity setting 1
- DHW capacity ___%
- Heating capacity ___%
- Cooling capacity ___°C

Capacity setting 2
- DHW capacity ___%
- Heating capacity ___%
- Cooling capacity ___°C

} Set by SG ready setting of remote controller

(When SG ready set to YES, Bivalent control pattern will set to Auto.)

**17. External Compressor SW** | Initial setting: No

System setup 12:00am,Mon
External error signal
Demand control
SG ready
External compressor SW
Select [↵] Confirm

Set when external compressor SW is connected.
SW is connected to external devices to control power consumption, ON signal will stop compressor's operation. (Heating operation etc. are not cancelled).

(NOTE) Does not display if there is no Optional PCB.

If follow Swiss standard power connection, need to turn on DIP SW (SW2 pin3) of main unit PCB. Short/Open signal used to ON/OFF tank heater (for sterilization purpose)

**18. Circulation Liquid** | Initial setting: Water

System setup 12:00am,Mon
Demand control
SG ready
External compressor SW
Circulation liquid
Select [↵] Confirm

Set circulation of heating water.

There are 2 types of settings, water and glycol.

(NOTE) Please set glycol when using anti-freeze liquid.
It may cause error if setting is wrong.

**19. Heat-Cool SW** | Initial setting: Disable

System setup 12:00am,Mon
SG ready
External compressor SW
Circulation liquid
Heat-Cool SW
Select [↵] Confirm

Able to switch (fix) heating & cooling by external switch.

(Open) : Fix at Heating (Heating +DHW)
(Short) : Fix at Cooling (Cooling +DHW)

(NOTE) This setting is disabled for model without Cooling.
(NOTE) Does not display if there is no Optional PCB.

Timer function cannot be used. Cannot use Auto mode.

**20. Force heater** | Initial setting: Manual

System setup 12:00am,Mon
External compressor SW
Circulation liquid
Heat-Cool SW
Force heater
Select [↵] Confirm

Under manual mode, user can turn on force heater through quick menu.

If selection is 'auto', force heater mode will turn automatically if pop up error happen during operation.
Force heater will operate follow the latest mode selection, mode selection is disable under force heater operation.

Heater source will ON during force heater mode.

**21. Force defrost** | Initial setting: Manual

Under manual code, user can turn on force defrost through quick menu.

If selection is 'auto', outdoor unit will run defrost operation once if heat pump have long hour of heating without any defrost operation before at low ambient condition. (Even auto is selected, user still can turn on force defrost through quick menu)

| System setup | 12:00am,Mon |
|---|---|
| Circulation liquid | |
| Heat-Cool SW | |
| Force heater | |
| Force defrost | |
| Select | [↵] Confirm |

**22. Defrost signal** | Initial setting: No

Defrost signal sharing same terminal as bivalent contact in main board. When defrost signal set to YES, bivalent connection reset to NO. Only one function can be set between defrost signal and bivalent.

When defrost signal set to YES, during defrost operation is running at outdoor unit defrost signal contact turn ON. Defrost signal contact turn OFF after defrost operation end. (Purpose of this contact output is to stop indoor fan coil or water pump during defrost operation).

| System setup | 12:00am,Mon |
|---|---|
| Heat-Cool SW | |
| Force heater | |
| Force defrost | |
| Defrost signal | |
| Select | [↵] Confirm |

**23. Pump flowrate** | Initial setting: ΔT

If pump flowrate setting is ΔT, unit adjust pump duty to get different of water inlet and outlet base on setting on * ΔT for heating ON and * ΔT for cooling ON in operation setup menu during room side operation.

If pump flowrate setting is set to Max. duty, unit will set the pump duty to the set duty at *Pump maximum speed in service setup menu during room side operation.

| System setup | 12:00am,Mon |
|---|---|
| Force heater | |
| Force defrost | |
| Defrost signal | |
| Pump flowrate | |
| Select | [↵] Confirm |

**24. DHW Defrost** | Initial setting: Yes

When DHW defrost set to YES, hot water of domestic hot water tank will be used during defrost cycle.

When DHW defrost set to NO, hot water of floor heating circuit will be used during defrost cycle.

❄ Only when the selection for Tank connection is Yes

| System setup | 12:00am,Mon |
|---|---|
| Force defrost | |
| Defrost signal | |
| Pump flowrate | |
| DHW Defrost | |
| Select | [↵] Confirm |

**25. Heating control** | Initial setting : Comfort

There are two modes to select for compressor frequency control : Comfort or Efficiency.
When set to Comfort mode, compressor will run at zone limit maximum frequency to reach set temperature faster.
When set to Efficiency mode, compressor will run at part load frequency at initial stage for energy saving.

| System setup | 12:00am,Mon |
|---|---|
| Defrost signal | |
| Pump flowrate | |
| DHW Defrost | |
| Heating control | |
| Select | [↵] Confirm |

**26. External meter**

Initial setting : [ Heat-cool meter : No ]
[ Tank meter : No ] *only available when Heat-cool meter select Yes
[ Elec. meter HP : No ]
[ Elec. meter 1 (PV meter) : No ]
[ Elec. meter 2 (Total building) : No ]
[ Elec. meter 3 (Reserve) : No ]

| System setup | 12:00am,Mon |
|---|---|
| Pump flowrate | |
| DHW Defrost | |
| Heating control | |
| External meter | |
| Select | [↵] Confirm |

There are two systems for generation meter connection : one generation meter system (Heat-cool meter) or two generation meter system (Heat-cool meter and Tank meter)
Both systems can provide all generation data of heating, cooling and DHW directly from external meter.

If Heat-cool meter is set to Yes, it will read from external meter for heat pump's energy generation data during heating, cooling and DHW operation[*1].
If Heat-cool meter is set to No, it will base on unit's calculation for heat pump's energy generation data during heating, cooling and DHW operation.
If Tank meter is set to Yes, it will read from external meter for heat pump's energy generation data during DHW operation[*1].

If Elec. meter HP is set to Yes, it will read from external meter for heat pump's energy consumption data.
If Elec. meter HP is set to No, it will base on unit's calculation for heat pump's energy consumption data.

If Elec. meter 1 (PV meter) is set to Yes, it will read from external meter for energy generation data of solar system and display it on Cloud system.
If Elec. meter 2 (Building) is set to Yes, it will read from external meter for energy consumption data of the building and display it on Cloud system.
If Elec. meter 3 (Reserve) is set to Yes, it will read from external meter for energy consumption data obtained from reserved electricity meter and display it on Cloud system.

[*1] Set Heat-cool meter to Yes and set Tank meter to No when 1 generation meter system is installed.
Set Heat-cool meter to Yes and set Tank meter to Yes when 2 generation meter system is installed.

Remark : Elec. meter HP refers to Electricity meter that measures Heat Pump unit's consumption.
Elec. meter 1 / 2 / 3 refers to Electricity meter no. 1 / no. 2 / no. 3

## 12.3.3.4 Operation Setup

### Heat

**27. Water temp. for heating ON** | Initial setting: compensation curve

Set target water temperature to operate heating operation.
Compensation curve: Target water temperature change in conjunction with outdoor ambient temperature change.
Direct: Set direct circulation water temperature.

In 2 zone system, zone 1 and zone 2 water temperature can be set separately.

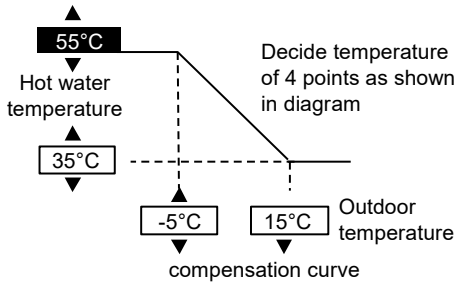


**28. Outdoor temp. for heating OFF** | Initial setting: 24°C

Set outdoor temp to stop heating.
Setting range is 5°C ~ 35°C

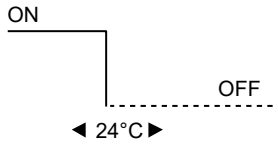


**29. ΔT for heating ON** | Initial setting: 5°C

Set temp difference between out temp & return temp of circulating water of Heating operation.
When temp gap is enlarged, it is energy saving but less comfort. When the gap gets smaller, energy saving effect gets worse but it is more comfortable.
Setting range is 1°C ~ 15°C

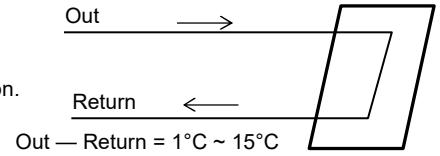


**30. Heater ON/OFF**

a. Outdoor temp. for heater ON | Initial setting: 0°C

Set outdoor temp when back-up heater starts to operate.
Setting range is -20°C ~ 15°C

User shall set whether to use or not to use heater.

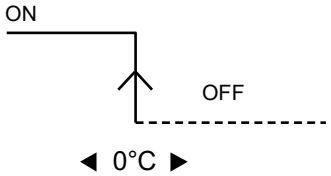


b. Heater ON delay time | Initial setting: 30 minutes

Set delay time from compressor ON for heater to turn ON if not achieve water set temperature.
Setting range is 10 minutes ~ 60 minutes

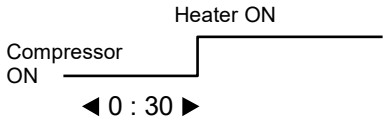


c. Heater ON: ΔT of target Temp | Initial setting: -4°C

Set water temperature for heater to turn on at heat mode.
Setting range is -10°C ~ -2°C

d. Heater OFF: ΔT of target Temp | Initial setting: -2°C

Set water temperature for heater to turn off at heat mode.
Setting range is -8°C ~ 0°C

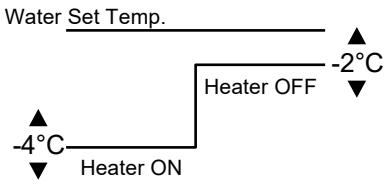

## Cool ❊ Cooling model only

**31. Water temp. for cooling ON** | Initial setting: compensation curve

Set target water temperature to operate cooling operation.
Compensation curve: Target water temperature change in conjunction with outdoor ambient temperature change.
Direct : Set direct circulation water temperature.

In 2 zone system, zone 1 and zone 2 water temperature can be set separately.

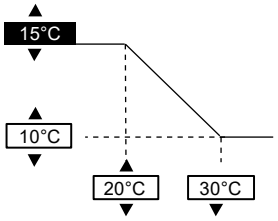

compensation curve

**32. ΔT for cooling ON** | Initial setting: 5°C

Set temp difference between out temp & return temp of circulating water of Cooling operation.

When temp gap is enlarged, it is energy saving but less comfort. When the gap gets smaller, energy saving effect gets worse but it is more comfortable.
Setting range is 1°C ~ 15°C

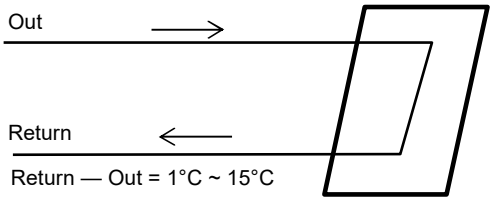

Return — Out = 1°C ~ 15°C

## Auto ❊ Cooling model only

**33. Outdoor temp. for (Heat to Cool)** | Initial setting: 15°C

Set outdoor temp that switches from heating to cooling by Auto setting.
Setting range is 6°C ~ 25°C

Timing of judgement is every 1 hour

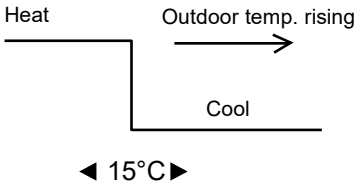


**34. Outdoor temp. for (Cool to Heat)** | Initial setting: 10°C

Set outdoor temp that switches from Cooling to Heating by Auto setting.
Setting range is 5°C ~ 24°C

Timing of judgement is every 1 hour

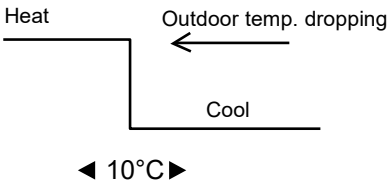

**Tank** ❈ Only when the selection for Tank connection is Yes

**35. Floor operation time (max)** | Initial setting: 8h

Set max operating hours of heating.
When max operation time is shortened, it can boil the tank more frequently.

It is a function for Heating + Tank operation.

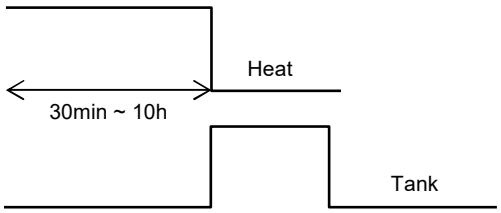


**36. Tank heat up time (max)** | Initial setting: 60min

Set max boiling hours of tank.
When max boiling hours are shortened, it immediately returns to Heating operation, but it may not fully boil the tank.

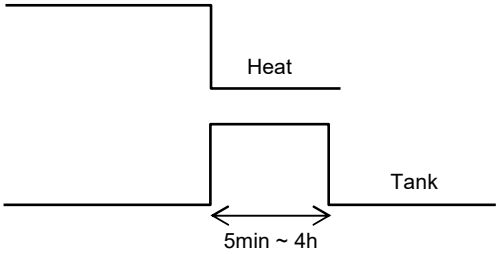


**37. Tank re-heat temp.** | Initial setting: -8°C

Set temp to perform reboil of tank water.

Setting range is -12°C ~ -2°C

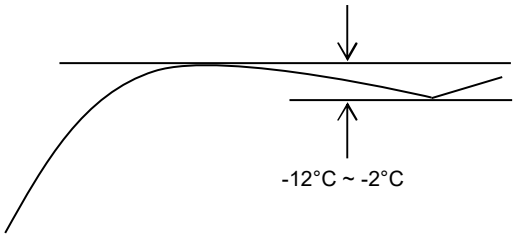


**38. Sterilization** | Initial setting: 65°C 10min

Set timer to perform sterilization.
① Set operating day & time. (Weekly timer format)
② Sterilization temp (55~75°C ❈ If use back-up heater, it is 65°C)
③ Operation time (Time to run sterilization when it reached setting temp 5min ~ 60min)

User shall set whether to use or not to use sterilization mode.

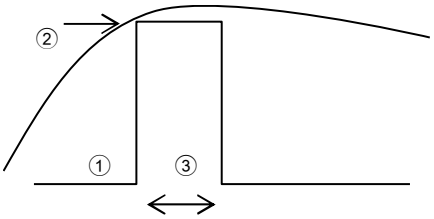

## 12.3.3.5 Service Setup

**39. Pump maximum speed**

Initial setting: Depend on model

Normally setting is not necessary.
Please adjust when need to reduce the pump sound etc.
Besides that, it has Air Purge function.

When *Pump flow setting is Max. Duty, this duty set is the fix pump duty run during room side operation.

| Service setup | | 12:00am,Mon |
|---|---|---|
| Flow rate | Max. Duty | Operation |
| 34.4 L/min | 0xCE | Air Purge |
| Select | | |

**40. Dry concrete**

Operate concrete curing operation.
Select Edit, set temp for every stage (1~99 1 is for 1 day).
Setting range is 25~55°C

When it is turned ON, dry concrete starts.

When it is 2 zone, it dries both zones.

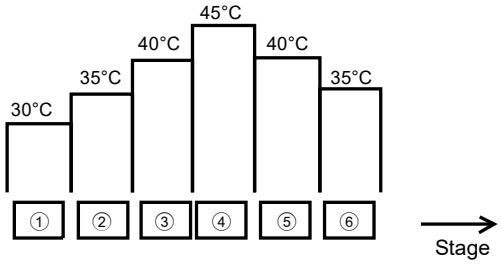


**41. Service contact**

Able to set name & tel no. of contact person when there is breakdown etc. or client has trouble. (2 items)

| Service setup | 12:00am,Mon |
|---|---|
| Service contact: | |
| Contact 1 | |
| Contact 2 | |
| Select | [↵] Confirm |

| Contact-1: Bryan Adams | |
|---|---|
| ABC/ abc | 0-9/ Other |
| A B C D E F G H I J K L M N O P Q R | |
| S T U V W X Y Z a b c d e f g h i | |
| j k l m n o p q r s t u v w x y z | |
| Select | [↵] Enter |

## 12.3.3.6 Remote Control Setup

**42. RC selection**

Initial setting : Single

Set to "Single" when only one remote controller is installed.
Set to "Dual" when two remote controllers are installed.

| RC selection | 12:00am,Mon |
|---|---|
| Single | |
| Dual | |
| Select | [↵] Confirm |

## 12.4 Service and Maintenance

**If forget Password and cannot operate remote controller**

Press ⮌ + ↵ + > for 5 sec.
Password unlock screen appears, press Confirm and it shall reset.
Password will become 0000. Please reset it again.
(NOTE) Only display when it is locked by password.

### 12.4.1 Maintenance Menu

**Setting method of Maintenance menu**

| Maintenance menu | 12:00am,Mon |
|---|---|
| Actuator check | |
| Test mode | |
| Sensor setup | |
| Reset password | |
| ▼ Select | [↵] Confirm |

Press ⮌ + ↵ + > for 5 sec.

Items that can be set

① Actuator check (Manual ON/OFF all functional parts)
(NOTE) As there is no protection action, please be careful not to cause any error when operating each part (do not turn on pump when there is no water etc.)

② Test mode (Test run)
Normally it is not used.

③ Sensor setup (offset gap of detected temp of each sensor within -2~2°C range)
(NOTE) Please use only when sensor is deviated. It affects temperature control.

④ Reset password (Reset password)

### 12.4.2 Custom Menu

**Setting method of Custom menu**

| Custom menu | 12:00am,Mon |
|---|---|
| Cool mode | |
| Back-up heater | |
| Reset energy monitor | |
| Reset operation history | |
| ▼ Select | [↵] Confirm |

Please press ☰ + ∨ + < for 5 sec.

Items that can be set

① Cool mode (Set With/Without Cooling function) Default is without (Disable)
(NOTE) As with/without Cool mode may affect electricity application, please be careful and do not simply change it.
In Cool mode, please be careful if piping is not insulated properly, dew may form on pipe and water may drip on the floor and damage the floor.

② Backup heater (Use/Do not use Backup heater)
(NOTE) It is different from to use/not to use backup heater set by client. When this setting is used, heater power on due to protection against frost will be disabled. (Please use this setting when it is required by utility company.)
By using this setting, it cannot defrost due to low Heating's setting temp and operation may stop (H75)
Please set under the responsibility of installer.
When it stops frequently, it may be due to insufficient circulation flow rate, setting temp of heating is too low etc.

③ Reset energy monitor (delete memory of Energy monitor)
Please use when moving house and handover the unit.

④ Reset operation history (delete memory of operation history)
Please use when moving house and handover the unit.

## 12.4.3 Check Water Pressure from Remote Controller

1. Press ☰ SW and scroll to "System check".
2. Press ↵ and scroll to "System information".
3. Press ↵ and search for "Water pressure".

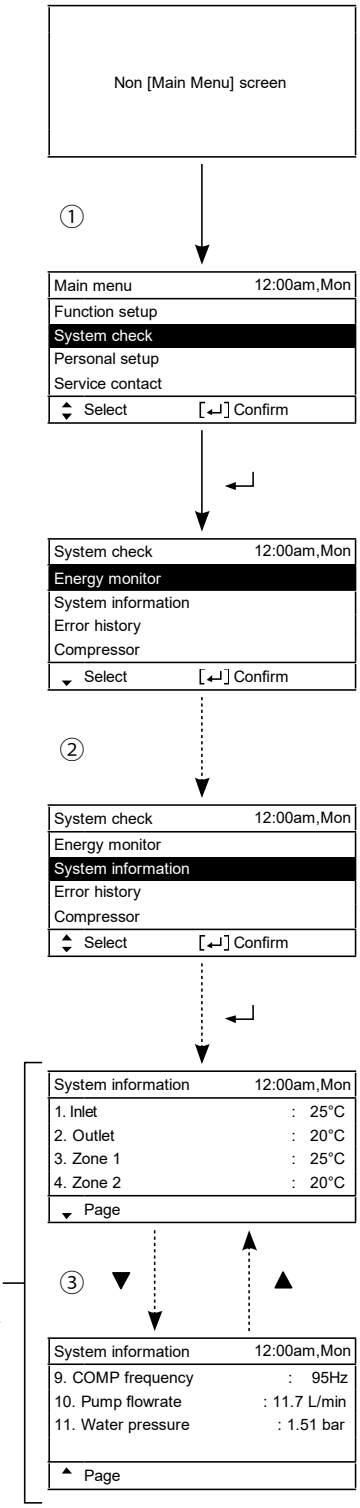

# 13. Installation and Servicing Air-to-Water using R290

| | |
|---|---|
| **WARNING** | This symbol shows that this equipment uses a flammable refrigerant with safety A3 group per ISO 817. If the refrigerant is leaked, together with an external ignition source, there is a possibility of fire / explosion. |

## *13.1 About R290 Refrigerant*

Hydrocarbon is a class of organic chemical made up only with the element Carbon (C) and Hydrogen (H). R290 is the type of Hydrocarbon refrigerant which is environmentally good-natured and odorless refrigerant. Under Kigali Amendment to the Montreal Protocol, 80% reduction of greenhouse gas emission by next 30 years is required, and due to this requirement, further reduction in the emission of high greenhouse effect gas is required. Therefore, the conversion of air-conditioning refrigerant into one which has no greenhouse effect, even if it is dissipated into the atmosphere became our responsibility.

Nevertheless, in case of air-conditioning refrigerant, it would be the best if there is a refrigerant which has no impact on global warming but ensures good energy efficiency and performance, and is safe; however, there is no such refrigerant which satisfies all these conditions. As a result, we have been considering the practical usage, within the safety frame-work, of R290 refrigerant which has no effect of global warming but highly flammable.

## *13.2 Characteristics of R290 Refrigerant*

1. Chemical Characteristics

R290 (Propane) is refrigerant grade propane, which is natural, non toxic, and chemically stable compound formed by hydrogen.

R290 is one of natural refrigerant, therefore it has almost zero greenhouse gas effect. R-290 is a single-component hydrocarbon substance and the most hydrocarbon properties as it is highly flammable.

Chemical Characteristic Table of R290 and R32

| | R290 | R32 |
|---|---|---|
| Chemical Formula | C3H8 | CH2F2 |
| Composition | Single Composition | Single Composition |
| Boiling point (°C) | -42.1 | -51.7 |
| 50°C vapor pressure (MPa) | 1.71 | 3.14 |
| Ozone Depletion Potential | 0 | 0 |
| Global Warming Potential (GWP) | 3 | 675 |
| Inflammability | Highly Inflammable (A3) | Slightly Inflammable (A2L) |
| Toxicity | None | None |

2. Characteristic of Pressure

As shown in Table 2, R290 has half the vapor pressure of R32 at the same refrigerant temperature.
As such, it can be installed and maintained with the same high-pressure tools and components as the R32.

Table 2. Saturated vapor pressure comparison table

(Unit: MPaG)

| Temperature (°C) | Refrigerant | |
|---|---|---|
| | R290 | R32 |
| -20 | 0.14 | 0.30 |
| 0 | 0.37 | 0.71 |
| 20 | 0.74 | 1.37 |
| 40 | 1.27 | 2.38 |
| 60 | 2.03 | 3.84 |
| 65 | 2.23 | 4.29 |

Reference : Thermal properties table of Japan Society of Refrigerating and Air Conditioning Engineers (60, 65°C)
NIST REFPROP V8.0 (-20 ~ 40°C)

3. Flammable characteristic

As shown in below table, R290 is highly flammable and explosive when heated. The installation must be equipped with ATEX (Atmospheres Explosible) certified equipment and must always turn on the combustible gas detector during servicing and when entering the service area. Service must also be performed in a well-ventilated area, especially if the refrigerant system is being accessed.

3.1 Safety class

| Increasing Flammability | SAFETY GROUP | |
|---|---|---|
| Higher Flammability | A3 | B3 |
| Lower Flammibility | A2 | B2 |
| | A2L | B2L |
| No Flame Propagation | A1 | B1 |
| | Lower Toxicity | Higher Toxicity |

Increasing Toxicity

| Refrigerant | Burning Speed cm/s |
|---|---|
| R32 | 6.7 |
| **R290** | **38.7** |

3.2 Concentration control for R290

Because R290 is highly flammable, it can burn or explode if there is enough product concentrated in one space and the refrigerant comes in contact with an ignition source.

Control measurement;

| Descriptions | Specifications |
|---|---|
| Lower flammability limit (LFL) [kg/m$^3$] | 0.038 |
| Lower flammability limit (LFL) [%] | 2.1 |
| Practical limit (PL) [kg/m$^3$] | 0.008 |
| Density of vapour [kg/m$^3$] | 1.83 |

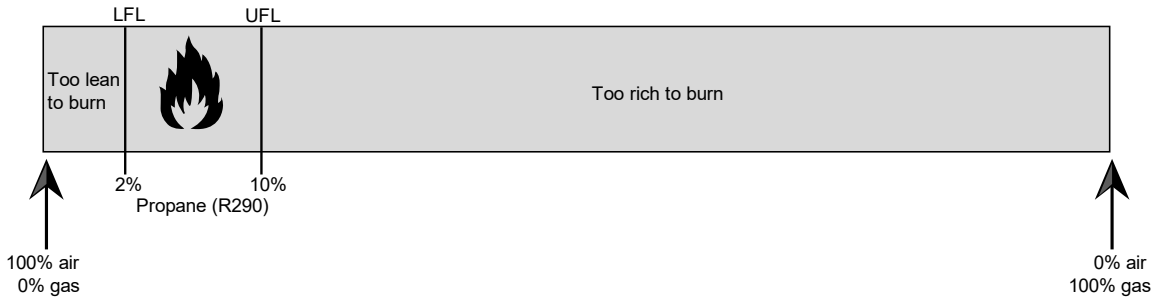


The concentration of R290 between the lower flammable limit (2%) and upper flammable limits (10%) is enough to ignite fire.

Note:
LFL – Lower flammable limit whereby the concentration of flammable gas, vapour or mist in the air below which an explosive gas atmosphere will not be formed.
UFL – Upper flammable limit whereby the concentration of flammable gas, vapour or mist in the air below which an explosive gas atmosphere will not be formed.
PL – Defined as concentration used for simplified calculation to determine the maximum acceptable amount of refrigerant in an occupied space (20% of LFL)

3.3 Material classification and Hazard statement

| | |
|---|---|
| **H280** | **Contain gas under pressure; may explode if heated** |
| **CGA-HG01** | **May cause frostbite** |

## 13.3 Refrigerant piping installation • Tools used in services

### 13.3.1 Required Tools

R290 refrigerant air conditioners must use ATEX (Atmosphere Explosible) certified equipment. The common parts as R32 air conditioners for two-way valves and three-way valves (diameters of service ports); thus, they maintain commonality in the maintenance of the compressive strength, the size of pipe flaring, and the size of flare nuts as R32. However refrigerant pipe installation and services must use tools certified for highly flammable gas.

However, mixing of refrigerants is not allowed, so that you have to separate the cylinders for the recovery of refrigerants.

Tools used for installation • relocation • replacement of air conditioning units

| Works | R290 | R32 |
|---|---|---|
| Connecting of refrigerant pipes | Not applicable for Monobloc | |
| | Not applicable for Monobloc | |
| Manifold gauge charging hose | HC Manifold gauge to avoid refrigerant contamination | R32 & R410A Common |
| Air purging | Vacuum pump complied with ATEX (Atmosphere Explosible) | Vacuum pump + Reducer / expander |
| Gas leakage test | Combustible gas detector | Detection liquid or soup water, HFC detector |

For other installation, you can use general tools such as screw drivers (+, -), metal saws, long-nose pliers, hole core drills, linen tape, levels, temperature gauges, clamp meters, electric knives, nippers, pipe cutters, reamers or scrapers, spring benders, monkey wrenches, fixing wrenches, feeler gauges, hexagon wrenches (4 mm), testers, megohm testers, etc.

Tools used for services.

| Works | R290 | R32 |
|---|---|---|
| Insertion of refrigerant | Digital scale for refrigerant charging, refrigerant cylinders, cylinder adopters and packing *a | |
| Recovery of refrigerant | Refrigerant recovery devices, refrigerant cylinders, manifold gauges, charging hoses *b | |

*a. Use cylinder for each refrigerant, cylinder adopter and packing.
*b. Use refrigerant recovery cylinder separately for each refrigerant **(no mixture of refrigerant allowed)**.

### 13.3.2 Tools for R290

1. Manifold gauges

R32 gauge can be used for R290 pressure.

Each port of manifold has different shapes in order to prevent inserting wrong refrigerant.
*However, the port shape for R290 and R32 is the same; therefore, attention need to be paid not to insert wrong refrigerant.

Differences in high/low pressure gauges

| | R290 (common R32) |
|---|---|
| High pressure gauges (red) | -0.1 ~ 5.3 MPa<br>-76 cmHg ~ 53 kgf / $cm^2$ |
| Low pressure gauges (blue) | -0.1 ~ 3.8 MPa<br>-76 cmHg ~ 38 kgf / $cm^2$ |

Difference in manifold port sizes

| | R290 (common R32) |
|---|---|
| Port sizes | 1/2 UNF20 |

2. Charging hoses

The material is changed to HC resistant, and the size of each manifold adopter is common, as the R32 port size of manifold gauge.
Further, some hoses are with anti-gas pressure backflow valves placed near the adopters. (hoses with the valves recommended)

Manifold gauges / Charging hoses

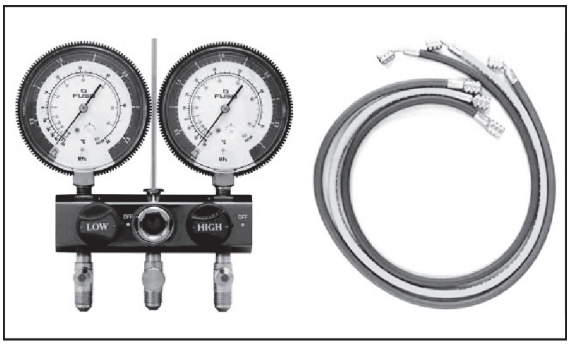


Differences in charging hoses

| | | R290 (common R32) |
|---|---|---|
| Pressure Resistance | Normal operation pressure | 5.1 MPa<br>(52 kgf / $cm^2$) |
| | Burst pressure | 27.4 MPa<br>(280 kgf / $cm^2$) |
| Material | | HNBR rubber<br>Internal nylon coating |

3. Vacuum pump and isolator.

When using a vacuum pump, it is compulsory to use an ATEX certified vacuum pump.
When connecting service equipment (such as vacuum pumps) to a power source, the connection should be made in outside the Temporary Danger Zone.
It is recommended to use an ATEX Isolator switch to facilitate a safe shutdown in the danger zone.
It is necessary to set a solenoid valve in order to prevent backflow of vacuum pump oil into the charge hoses and use a vacuum pump with oil backflow prevention function.
If vacuum pump oil (mineral oil-based) mixes with R290, it may cause damage to the machine.

Vacuum pump

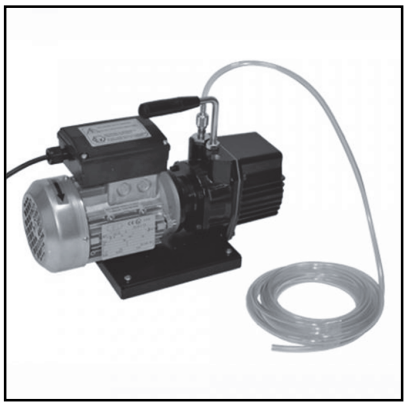

Isolator

4. Leak Detector

HC refrigerant Electric gas leakage tester is used for R290. The usage of existing HFC detectors cannot be use as they can produce spark. We recommend to use detectors specifically designed for combustible gas.

Combustible gas leak detector

5. Digital scale for refrigerant charging

R290 has lower pressure level and the evaporates speed is slow. Thus, the digital scale for refrigerant charging can be used in common with R32. The charging port for R32 is (1/2 UNF20), common with R290

Digital scale for refrigerant charging

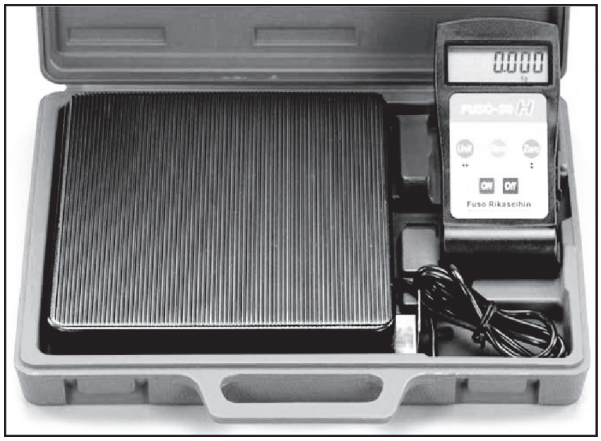


6. Refrigerant cylinders

Refrigerant cylinders for R290 are painted in other colors that might subject to change according to the international standards. R290 is a single refrigerant, so that both liquid and gas insertion are possible. Additional charging is also possible.

Refrigerant cylinders

7. Connection ports of refrigerant cylinders and packing

Charging ports which fit to the charging hose connection port size (1/2 UNF20) is needed. At the same time, the packing has to be of HC resistant materials.

Connection ports and packing

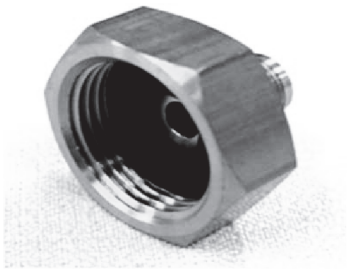

## 8. Tools used for refrigerant piping installations and services

| | Common tools | R290 | R32 |
|---|---|---|---|
| 1. | Pipe cutters, reamers or scrapers | Not applicable for Monobloc | Not applicable for Monobloc |
| 2. | Flare tools (clutch type) | Not applicable for Monobloc | Not applicable for Monobloc |
| 3. | Torque wrench (1/4, 3/8) | Not applicable for Monobloc | Not applicable for Monobloc |
| 4. | Torque wrench (1/2, 5/8) | Not applicable for Monobloc | Not applicable for Monobloc |
| 5. | Manifold gauges, charging hose | ○ | ○ |
| 6. | Vacuum pump, vacuum pump isolator *2 | Connection 5/16 [ATEX certified] *1 | |
| 7. | Electric gas leakage detectors | Combustible gas detector | HFC detector |
| 8. | Digital scale for refrigerant charging | ○ | ○ |
| 9. | Recovery devices (connection port 5/16) *2 | ATEX certified | HFC recovery devices |
| 10. | Refrigerant cylinder color | Other (colors that might subject to change according to the international standards) | Other (colors that might subject to change according to the international standards) |
| 11. | Refrigerant cylinder connection port and packing | x | ○ |
| 12. | Allen wrench (4mm) Electric knives | x | ○ |
| *1 | Those testers only for HC only cannot be for common use with HFC | | |
| *2 | Recovery devices which are certified by Atmosphere Explosible (ATEX) | | |

[Knowledge for the common usage of tools for R290 & R32]
R290 and R32 machines use different compressor oils.

- If unregulated compressor oil gets mixed into, it may cause damage to the machine function.

[Inserting wrong refrigerant]

- It may cause "not cooling" and "not heating" customer claims because each component (expansion valve, compressor, PCB) of the refrigerant cycle is specially adjusted for R290.
- At the same time, it is not subject to product warranty, if wrong refrigerant was inserted into system.

Reference:-

- ASHRAE Standard 34-2016
- ISO Standard ISO 5149
- ISO 817:2014

## 13.4 New installation, and Repairing of Refrigerant Cycle System Procedures

Personnels working on A3 systems may be subject to applicable occupational hazard or regulations required by local or national law.
For safe servicing and disposal, technicians must have detailed knowledge and skills in handling of flammable refrigerants, prevention of refrigerant leaks, leak detection, personal protective equipment, cylinder handling and loading. A dry powder or $C0_2$ fire extinguisher must be available at the place of service.

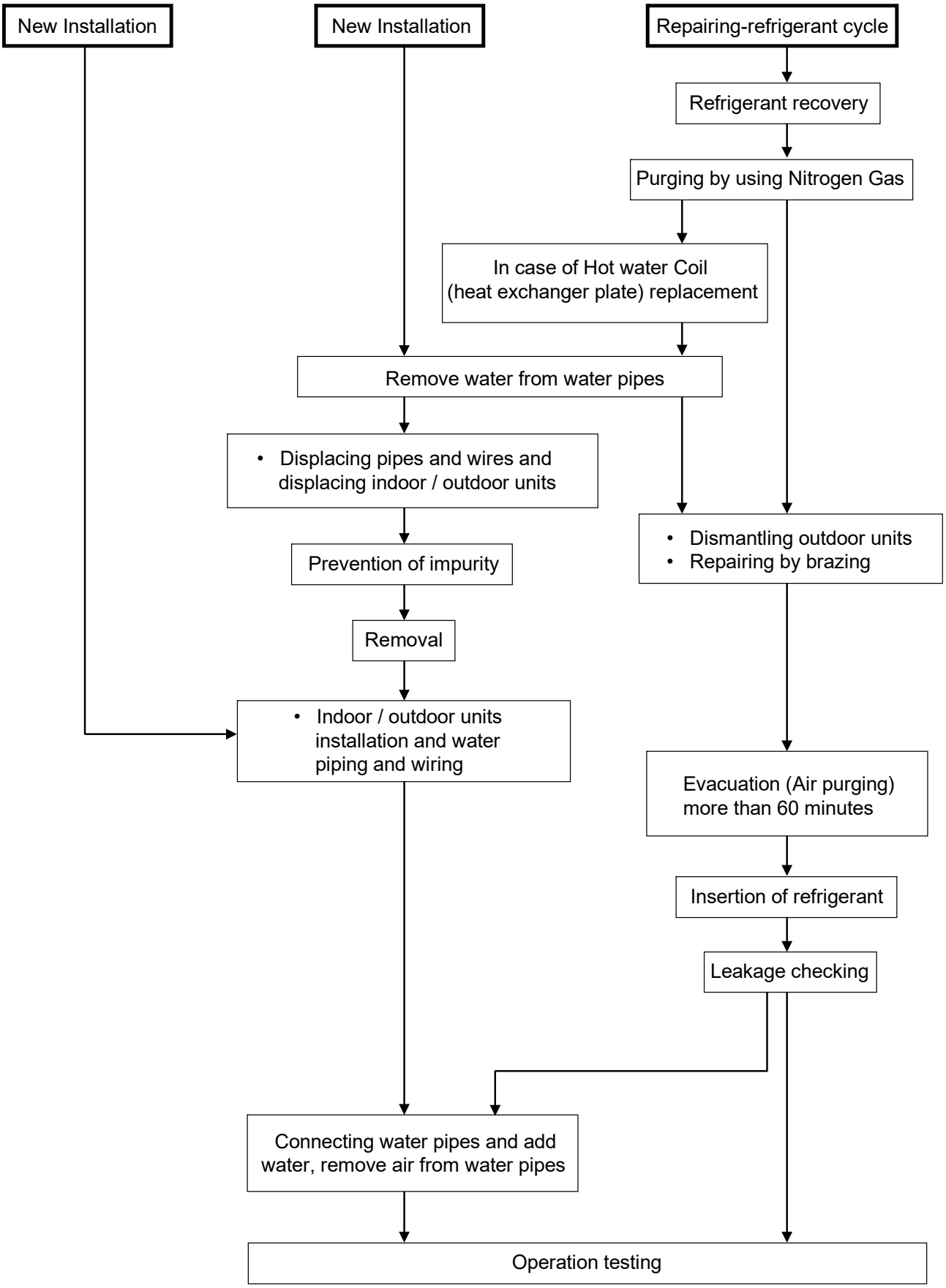

## 13.5 Servicing

### 13.5.1 Recover R290 refrigerant with refrigerant recovery machine

**CAUTION!**

- Always turn ON the combustible leak detector.
- Keep all ignition sources, hot surface, and open flames 3 meter away from the product.
- Ensure the servicing area is well ventilated.
- Ensure the product is service by certified serviceman.
- Ensure to always have the approved fire extinguisher.

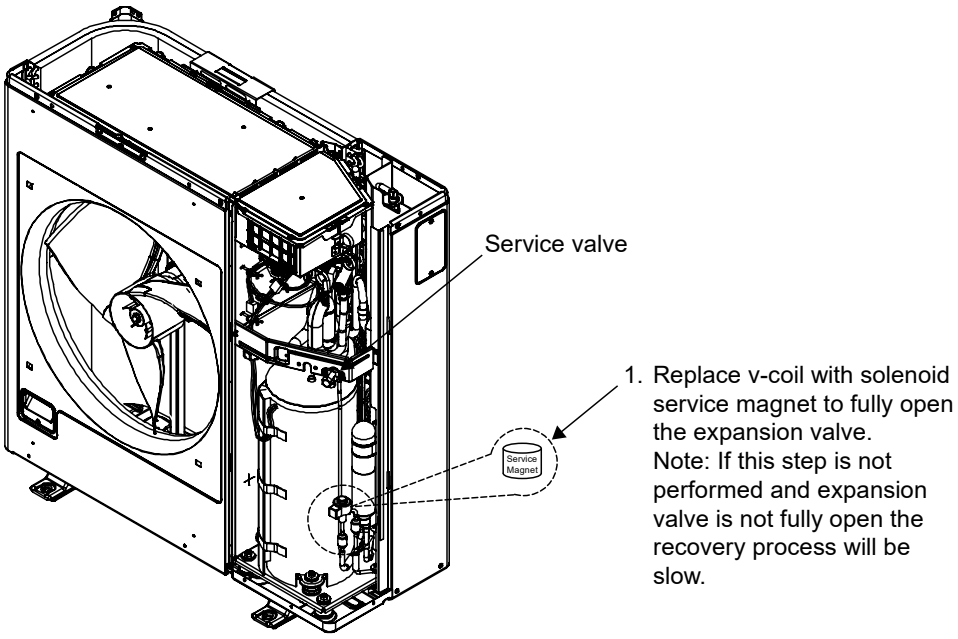


**CAUTION!**
All equipment and material must be ATEX certified to be allowed to operate within Atmosphere Explosible zone.

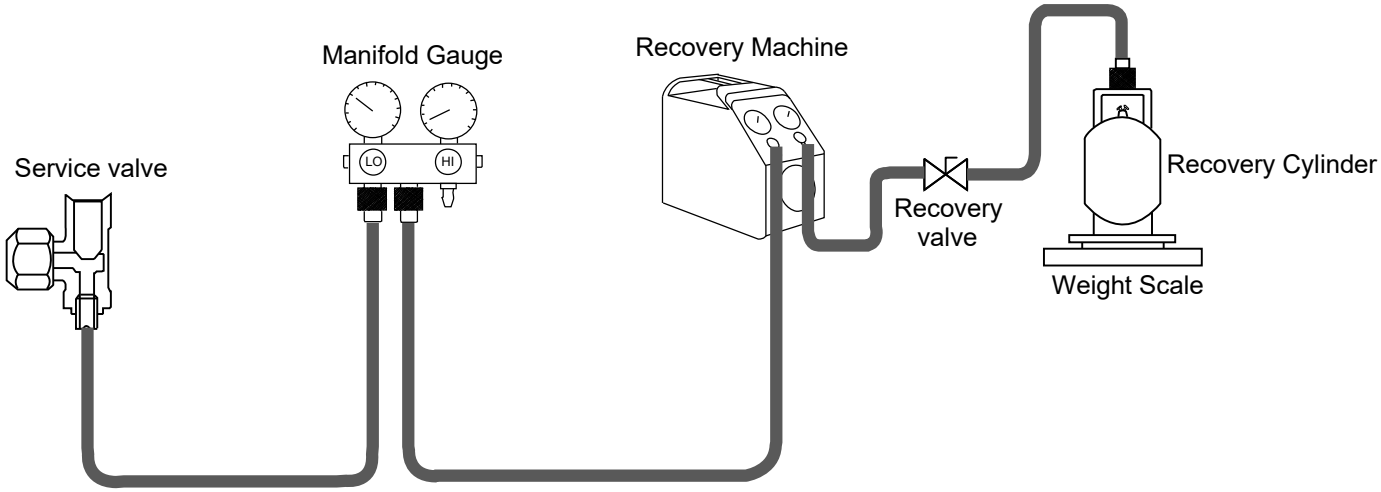


**CAUTION!**
Do not refill R290 refrigerant more that 50% of recovery cylinder capacity to avoid overpressure. (Safety risk)

| Refrigerant Type | Recovery Cylinder Capacity |
|---|---|
| R32 | 80% of the weight |
| R290 | 50% of the weight |

2. Connect the Low side charging hose of the manifold gauge to the service valve (2-way valve) in the outdoor unit.
3. Connect the center hose of the manifold gauge to the recovery machine.
4. Attached the manifold gauge correctly and tightly. Ensure both valve (Low side and High side) is in close position.
5. Connect the hose from recovery machine to the recovery cylinder.
6. Turn ON the recovery machine, turn the low side valve, service valve and recovery valve to open position.

### 13.5.2 Purging by using Nitrogen Gas Before Servicing and Disposal

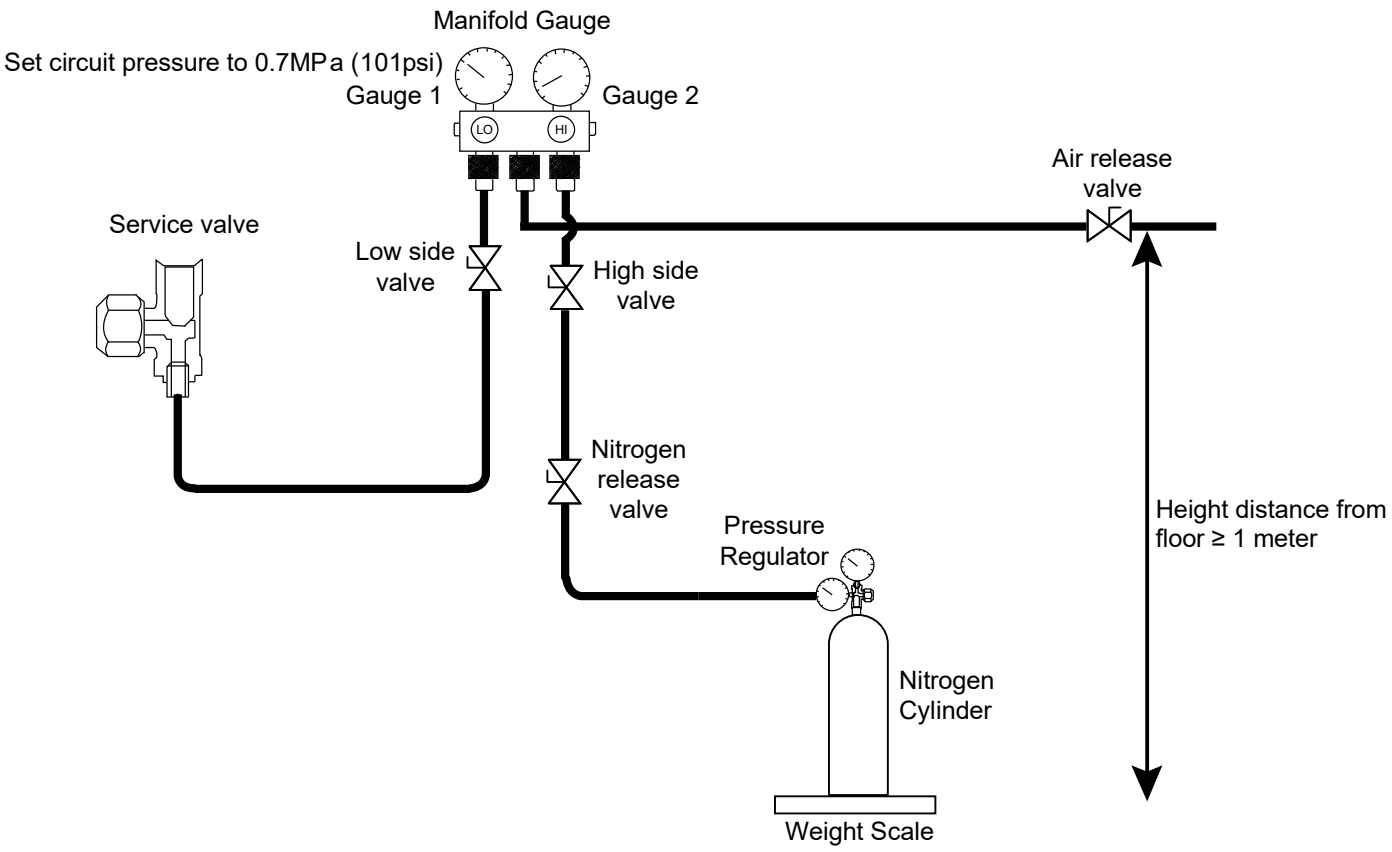


1. Connect nitrogen cylinder to the high side at the manifold gauge. Ensure nitrogen cylinder is connected to pressure regulator.
2. Close air release valve and open service valve.
3. Open High side valve and nitrogen release valve. (Set the pressure regulator to 200psi).
4. Charge nitrogen gas up to 0.7MPa (101psi) or charge 400 grams of nitrogen into the unit.
5. Close high side valve and open air release valve (half open) to release remaining propane to the atmosphere. Air release valve must be directed 1 meter from the floor to enable the propane gas to spread properly in the atmosphere. [Beware not to fully open the air release valve to avoid high pressure and compressor oil discharge].
6. When gauge 1 pressure reach near atmospheric (15psi) point the combustible leak detector to air release valve to detect the presence of propane. If presence of propane can still be detected, repeat procedure 2 to 5 until presence of propane cannot be detected.
   [Then refrigerant circuit repairment or unit decommissioning should be done].
7. Before charging new refrigerant, vacuum the system until it reaches to 500micron (67Pa) to remove foreign gas in the system and hold for 15 minutes.

# 14. Operation and Control

## 14.1 Basic Function

Inverter control, which equipped with a microcomputer in determining the most suitable operating mode as time passes, automatically adjusts output power for maximum comfort always. In order to achieve the suitable operating mode, the microcomputer maintains the set temperature by measuring the temperature of the environment and performing temperature shifting. The compressor at outdoor unit is operating following the frequency instructed by the microcomputer at indoor unit that judging the condition according to internal water setting temperature and water outlet temperature.

### 14.1.1 Internal Water Setting Temperature

Once the operation starts, control panel setting temperature will be taken as base value for temperature shifting processes. These shifting processes are depending on the Air-to-Water Heat pump settings and the operation environment. The final shifted value will be used as internal water setting temperature and it is updated continuously whenever the electrical power is supplied to the unit.

### 14.1.2 Heating Operation

#### *14.1.2.1 Thermostat Control*

- Compressor is OFF when Water Outlet Temperature – Internal Water Setting Temperature > 3°C for continuously 3 minutes.
- Compressor is ON after waiting for 3 minutes, if the Water Outlet Temperature – Water Inlet Temperature (temperature at thermostat OFF is triggered) <-3°C.

#### *14.1.2.2 Thermostat Control (Outdoor Ambient Temperature)*

Stops provide heating to room side during high outdoor ambient condition.
Control content:

- Heating operation and water pump will turn OFF when outdoor ambient temperature > outdoor thermo off temperature + 3°C.
  (Outdoor thermo off set temperature is set by control panel. Thermo off set temperature is between 5°C ~ 35°C)
- Heating operation will resume when Outdoor ambient temperature < Outdoor thermo OFF set temperature + 1°C.

#### *14.1.2.3 Heat Mode Operation*

Operation of heat pump provide heating capacity to room side by hot water through heating panel, floor heating or fan coil unit.

1. 3 ways valve control:
   - 3 ways valve switch and fix to heating side.
2. Heat pump operates follow normal heating operation.
3. Back up heater operate follow normal operation.
4. 2 ways valve control:
   - 2 ways valve opens.

### 14.1.3 Cooling Operation

#### *14.1.3.1 Thermostat control*

- Compressor is OFF when Water Outlet Temperature – Internal Water Setting Temperature > -1.5°C for continuously 3 minutes.
- Compressor is ON after waiting for 3 minutes, if the Water Outlet Temperature – Water Inlet Temperature (temperature at thermostat OFF is triggered) >3°C.

#### *14.1.3.2 Cool Mode Operation*

1. 3 ways valve control:
   - 3 ways valve switch and fix to cooling side.
2. Heat pump operates follow normal cooling operation.
3. Room heater DOES NOT operate during cool mode.
4. 2 ways valve control:
   - 2 ways valve is closed.

## 14.1.4 Target Water Temperature Setting

### *14.1.4.1 Target Water Temperature Control of Standard System (Optional PCB not connected)*

There are 2 types of temperature control selection which are Compensation and Direct.

- Temperature control type selection by installer:
  1 Compensation : Wlo, WHi, ODLo, ODHi can be set at installer menu.
  2 Direct : Direct Water Temperature Set
- Remote control setting by user:
  1 Compensation : Shift value ±5°C from the compensation curve
  2 Direct : Direct water temperature set change

*This setting only able to set when room sensor select as Water Temperature.
*Instead of water temperature, user will set target room temperature when room sensor select as Room Thermistor OR Internal Room Thermostat.

- Target water temperature is calculated as below condition.
  - Target water temperature = A (Base temperature) + B (shift temperature)

| A (Base Temperature) | Compensation | Direct |
|---|---|---|
| | Value from the curve + User shift value set | Direct value from user setting |

  - B (shift temperature) value is depend on the room sensor selection at remote controller as below table:

| B (Shift Temp.) | B shift value depend on the room sensor selection at remocon as table below |
|---|---|
| **Sensor selection** | |
| Water temperature | B = 0 |
| External Room thermostat | B = 0 |
| Internal Room thermostat & Room Thermistor | **Cool Mode:**<br>B = 0 ; when Zone OFF or Zone Room Thermo OFF<br>B = B = 1* (room set temp (R/C) – actual room temp)<br>Max/Min Regulation of B: (Max = 5 ; Min = -5) |
| | **Heat Mode:**<br>B = 0 ; when Zone OFF or Zone Room Thermo OFF<br>B = follow Heating Room Temperature PI control logic |

- Maximum/minimum regulation of Target Water Temperature

| | Heating | Cooling |
|---|---|---|
| Max | 55°C (Below Ambient -20°C) *<br>75°C (Below Ambient -10°C) * | 20°C |
| Min | 20°C | 5°C |

* Between outdoor ambient -10°C and -20°C, max target decreases gradually from 75°C to 55°C.

<u>Compensation Type: (Operation under Heat Mode and Cool Mode)</u>

- The set temperature defines the parameters for the ambient (Outdoor temperature) dependent operation of the unit. The water temperature is determined automatically depending on the outdoor temperature. Default setting is the colder outdoor temperature will result in warmer water and vice versa. The user has the possibility to shift up and shift down the target water by remote control setting.

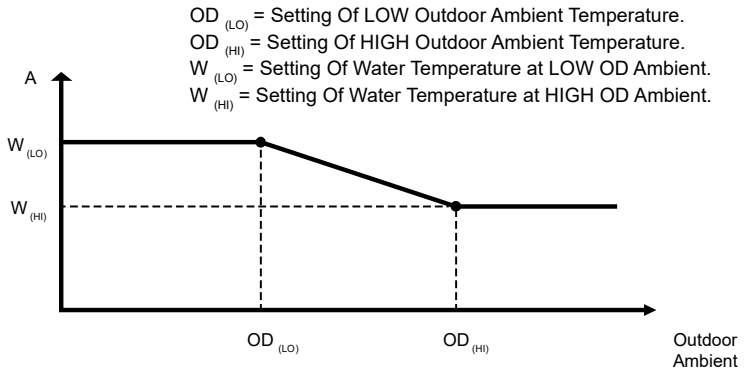

- Outdoor ambient is updated every 30 minutes when operation ON.
- Setting water outlet temperature always follow $W_{(LO)}$ or $W_{(HI)}$ whenever is higher if outdoor ambient sensor or indoor communication error happen.

However, when powerful mode is requested by remote control during heating mode, the higher value of HLo or Whi will be used for A calculation.

* There are 2 compensation curves (for heating and cooling). During heating mode, the heating curve is used and during cooling mode, the cooling curve is use.

- Compensation curve set shift value:

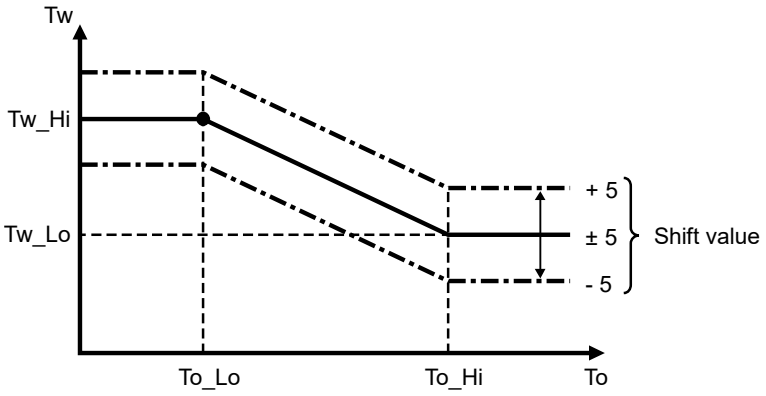


### 14.1.5 Target Water Temperature at Extension System (Optional PCB is connected)

Target water temperature is calculated as below.

- Heat Mode:

- When buffer tank selection is “YES:”
  Target water temperature = Target buffer tank temperature + [2°C]

- When buffer tank selection is “NO”
  - If both zone 1 and zone 2 is active
    Target Water Temperature = Higher zone target water temperature of Zone 1 and Zone 2.
  - If only one zone is active
    Target Water Temperature = Zone target water temperature of active zone.

- Cool mode:

- When buffer tank selection is “YES”
  - If both zone 1 and zone 2 active
    Target Water Temperature = Lower Zone Target Water Temperature of Zone 1 and Zone 2
  - If only one zone is active
    Target Water Temperature = Zone Target Water Temperature of active zone

- When buffer tank selection is “NO”
  - If both zone 1 and zone 2 active
    Target Water Temperature = Lower Zone Target Water Temperature of Zone 1 and Zone 2
  - If only one zone is active
    Target Water Temperature = Zone Target Water Temperature of active zone

*Cool Mode does not have SG ready control

## 14.1.6 Target Zone Water Temperature Control

Purpose:- To control zone mixing and zone pump according to the zone sensor temperature

### *14.1.6.1 Target Zone 1 water temperature setting control*

- Start condition
  - Heating zone 1 is ON by remote control or Timer or Auto Mode **OR**
  - Cooling zone 1 is ON by remote control or Timer or Auto Mode.

- Cancel condition
  - Heating zone 1 is OFF by remote control or Timer or Auto mode **AND**
  - Cooling zone 1 is OFF by remote control or Timer or Auto mode.

- Target Zone 1 water temperature is calculated as below condition.
  - Target Zone 1 water temperature = A (Base temperature) + B (shift temperature)

| **A (Base Temperature)** | **Compensation** | **Direct** |
|---|---|---|
| | Value from the curve + User shift value set | Direct value from user setting |

* During heat mode and compensation select, if powerful mode is activated, higher value of WLo or WHi will be use as curve value.

- B (shift temperature) value is depend on the room sensor selection at remote controller as below table:

| B (Shift Temp.) | B shift value depend on the room sensor selection at remocon as table below |
|---|---|
| **Sensor selection** | |
| Water temperature | B = 0 |
| External Room thermostat | B = 0 |
| Internal Room thermostat & Room Thermistor | **Cool Mode:**<br>B = 0 ; when Zone OFF or Zone Room Thermo OFF<br>B = B = 1* (room set temp (R/C) – actual room temp)<br>Max/Min Regulation of B: (Max = 5 ; Min = -5) |
| | **Heat Mode:**<br>B = 0 ; when Zone OFF or Zone Room Thermo OFF<br>B = follow Heating Room Temperature PI control logic |
| Pool Function Selected | B = Delta value setting from remocon |

* B = 0 regardless of which sensor selection, if SHP control bit is enable except Pool function select (maintain Pool "B" value)

** Pool function also can be select at Zone 1 when optional PCB is connected and Zone 1 system is select.

- Maximum/minimum regulation of Target Water Temperature.

| | **Heating** | **Cooling** |
|---|---|---|
| Max | 55°C (Below Ambient -20°C) *<br>75°C (Below Ambient -10°C) * | 20°C |
| Min | 20°C | 5°C |

* Between outdoor ambient -10°C and -20°C, max target decreases gradually from 75°C to 55°C.

- Target Zone 1 Water Temperature (Heat mode only) during SG ready control
  - If buffer tank selection is "NO" then following shift is carried out.
    - While digital input is "10" or "11" then,
      Final Target Zone 1 water temperature
      = Target Zone 1 water temperature* (SG ready % setting (remote control menu))%
  - If buffer tank selection is "YES"
    - No shift of Target Zone 1 Water Temperature. Target Buffer Tank Temperature will change accordingly.
      * Refer to "Buffer tank temperature control"

### 14.1.6.2 Target Zone 2 water temperature setting control

- Start condition
  - Heating zone 2 is ON by remote control or Timer or Auto Mode **OR**
  - Cooling zone 2 is ON by remote control or Timer or Auto Mode.

- Cancel condition
  - Heating zone 2 is OFF by remote control or Timer or Auto mode **AND**
  - Cooling zone 2 is OFF by remote control or Timer or Auto mode.
- Target Zone 2 water temperature is calculated as below condition.
  - Target Zone 2 water temperature = A (Base temperature) + B (shift temperature)

| A (Base Temperature) | Compensation | Direct |
|---|---|---|
| | Value from the curve + User shift value set | Direct value from user setting |

* During heat mode and compensation select, if powerful mode is activated, higher value of WLo or WHi will be use as curve value.

  - B (shift temperature) value is depend on the room sensor selection at remote controller as below table:

| B (Shift Temp.) | B shift value depend on the room sensor selection at remocon as table below |
|---|---|
| **Sensor selection** | |
| Water temperature | B = 0 |
| External Room thermostat | B = 0 |
| Internal Room thermostat & Room Thermistor | **Cool Mode:**<br>B = 0 ; when Zone OFF or Zone Room Thermo OFF<br>B = B = 1* (room set temp (R/C) – actual room temp)<br>Max/Min Regulation of B: (Max = 5 ; Min = -5) |
| | **Heat Mode:**<br>B = 0 ; when Zone OFF or Zone Room Thermo OFF<br>B = follow Heating Room Temperature PI control logic |
| Pool Function Selected | B = Delta value setting from remocon |

* B = 0 regardless of which sensor selection, if SHP control bit is enable except Pool function select (maintain Pool "B" value)

** Pool function also can be select at Zone 2 when optional PCB is connected and Zone 2 system is select.

- Maximum/minimum regulation of Target Water Temperature.

| | Heating | Cooling |
|---|---|---|
| Max | 55°C (Below Ambient -20°C) *<br>75°C (Below Ambient -10°C) * | 20°C |
| Min | 20°C | 5°C |

* Between outdoor ambient -10°C and -20°C, max target decreases gradually from 75°C to 55°C.

- Target Zone 2 Water Temperature (Heat mode only) during SG ready control
  - If buffer tank selection is "NO" then following shift is carried out.
    - While digital input is "10" or "11" then,
      Final Target Zone 2 water temperature
      = Target Zone 1 water temperature* (SG ready % setting (remote control menu))%
  - If buffer tank selection is "YES"
    - No shift of Target Zone 2 Water Temperature. Target Buffer Tank Temperature will change accordingly.
      * Refer to "Buffer tank temperature control"

### 14.1.6.3 Zone Temperature Control Contents

- During Standard System (Optional PCB not connected)
  - Only 1 zone temperature control is available
  - This zone room temperature is control by either one of the 4 room sensor (Room Th, Int/Ext Room Thermostat, Water temperature)
  - Target Zone Water Temperature is calculated based on selected temperature control type (Compensation or Direct) and selected room sensor. Target Water Temperature will set same as Target Zone Water Temperature
  - Target Water Temperature is the temperature for heat pump to operate refer to indoor water outlet sensor.

- Heat pump and water pump OFF when ROOM Thermo OFF (Zone thermo OFF by Room Th or Room Thermostat).

* There will be no zone sensor connected to zone 1 (No zone sensor error), mixing valve and zone pump will not operate.

- During Extension System (Optional PCB connected)

* There will be no zone sensor connected to zone 1 (No zone sensor error), mixing valve and zone pump will not operate.

- During Extension System (Optional PCB connected)

- Buffer Tank connection select "NO" &
  - One zone system is select
    - This zone room temperature control by either one of the 4 room sensor (Room Th, Int/Ext Room Thermostat, Water temp.)
    - Target Zone Water Temperature calculate base on selected temperature control type (Compensation or Direct) and selected room sensor.
    - Target Water Temperature will set same as Target Zone Water Temperature
    - Target Water Temperature is a temperature for heat pump to operate refer to indoor water outlet sensor.
    - Heat pump and water pump OFF when ROOM Thermo OFF (Zone thermo OFF by Room Th or Room Thermostat).

* There will be no zone sensor connected to zone 1 (No zone sensor error), mixing valve and zone pump will not operate.

  - 2 zone system select
    - Each zone room temperature is control by each sensor which select from either one of the 4 room sensor
    - Target Zone 1 & 2 Water Temperature is calculated based on selected temperature control type (Compensation or Direct) and selected room sensor.
      * Zone Mixing Valve & Zone pump will operate to achieve Target Zone Water Temperature which refer to zone sensor.
      * Zone Sensor will detect if zone sensor is open or short.
    - Target Water Temperature will set same as the active & higher zone water temperature setting. (When cooling mode, lower zone water temp setting)
    - Target Water Temperature is the temperature for heat pump to operate refer to indoor water outlet sensor.
    - Heat pump and water pump OFF when ROOM Thermo OFF (Both Zone thermo OFF by Room Th or Room Thermostat).

- Buffer Tank Connection select "YES" &
  - 1 zone system or 2 zone system select
    - Each zone control by each sensor which select from either one of the 4 room sensor
    - Target Zone 1 & 2 Water Temperature calculate base on selected temperature control type (Compensation or Direct) and selected room sensor. Each zone have their own Target Zone Water Temperature.
      * Zone Mixing Valve & Zone pump will operate to achieve each Target Zone Water Temperature which refer to zone sensor
      * Zone Sensor will detect if zone sensor is open or short.
    - Target Buffer Tank Temperature will be set as active & higher zone water temperature setting + Buffer Delta T. (Heating) Target Buffer Tank Temperature will be set as active & lower zone water temperature setting (Cooling).
    - Target Water Temperature will set as Target Buffer Tank Temperature + [2°C] (Heating) Target Water Temperature will set as Lower or Active Target Zone Water Temp. + [-3°C] (Cooling)
    - Target Water Temperature is a temperature for heat pump to operate refer to indoor water outlet sensor.
    - Heat pump and water pump OFF when ROOM thermo OFF
      - Heat mode: ROOM thermo OFF (Buffer Tank Temperature > Target Buffer Tank + [0°C]
      - Cool mode: ROOM Thermo OFF (Both Zone thermo OFF by Room Th or Room Thermostat)

### 14.1.7 Auto Mode Operation

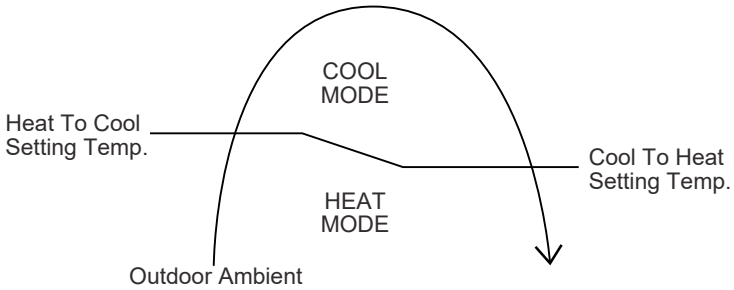


- Control details:
  - To enable the unit to operate either heat or cool mode automatically, heat to cool set temperature and cool to heat set temperature can be set by control panel.
  - Automatic operation is judged based on control panel setting temperature and outdoor ambient temperature.

  * Minimum setting of heat to cool set temperature is 1°C higher than cool to heat set temperature.

- Judgement control:
  - If outdoor ambient temperature < Heat to Cool Set Temperature, unit will operate in Heat Mode or else the unit will operate in Cool Mode.
  - If current operation is Cool mode, outdoor ambient temperature > Cool to Heat Temperature, unit will maintain Cool mode operation or else the unit will operate Heat mode.
  - If current operation is Heat mode, outdoor ambient temperature >Heat to Cool Temperature, unit will maintain Heat mode operation or else the unit will operate Cool mode.
  - Every 60 minutes the outdoor ambient temperature is judged.
  - When Auto + Tank mode is selected, operation mode switching is judged by both outdoor ambient temperature and indoor air temperature.

### 14.1.8 Auto Cooling Mode Operation Limit

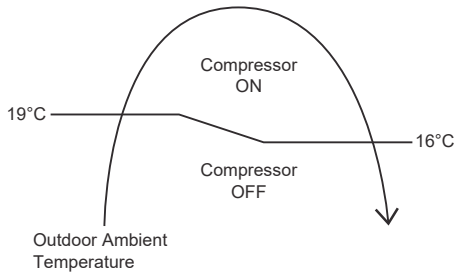


- Auto Mode Cooling Only operation will start once the outdoor ambient temperature reaches 19°C and compressor will continue to run until the outdoor ambient temperature drops to 16°C.
- Due to this limitation,
  If Heat to Cool temperature is set lower than 19°C, the compressor will not operates until the outdoor ambient temperature reaches 19°C or higher.

### 14.1.9 Tank Mode Operation

- 3 ways valve direction
  - 3 ways valve switch to tank side during Tank Thermo ON condition. Switch 3 ways valve to room side when tank achieve Tank Thermo OFF temperature.

- Tank Thermo ON/OFF Characteristic
  - Tank Thermo OFF

  Case 1: <u>Internal Tank Heater is select and Tank Heater ON</u>
  - Tank temperature > Tank Set Temperature continuously for 15 seconds.
  - Water outlet >75°C

- Case 2: Tank Heater OFF OR External Heater is select
  - When heat pump OFF due to water thermos & Tank temperature > Tank water set temperature for continuously 20 seconds. **OR**
  - Tank temperature > Tank set temperature + 1°C for continuously 20 seconds.

  - Tank Thermo ON

  Case 1: Tank Heater ON (Internal Tank Heater)
  - Tank temperature < Tank set temperature + R/C (Tank re-heat temperature)

  Case 2: Tank Heater OFF (Internal Tank Heater)
  - Tank temperature < Tank water set temperature + R/C (Tank re-heat temperature)

  * When tank thermo ON, water pump will ON for 3 minutes then only heat pump turn ON.
  * Tank water set temperature = tank set temperature or 65°C whichever lower.

- 2 ways valve close
- Heat pump Thermostat Characteristic
  - Heat pump Water Outlet set temperature is set to below table:

| Outdoor ambient temperature | Heat pump water outlet temperature |
|---|---|
| < -20°C | 57°C |
| > -20°C | 65°C |
| > -10°C | 75°C |

Characteristic of heat pump thermos ON/OFF under tank mode condition:

Water Outlet Thermo Condition
- Heat pump thermos OFF temperature:
  1. Heat pump thermo OFF temperature = Target Water outlet temperature + (2°C)
  2. Water outlet temperature > heat pump thermo OFF temperature for continuously 3 minutes, heat pump OFF but water pump continue ON.

- Heat pump thermo ON temperature
  1. Heat pump thermo ON temperature = water inlet during thermo OFF time + [-3°C]
  2. When water outlet temperature < heat pump thermo ON temperature, heat pump ON.

Water inlet thermo protection condition
- Heat pump thermo OFF temperature:
  1. Water inlet temperature > [75°C/55°C] for continuously 30 seconds, heat pump OFF, water pump continue ON.

- Heat pump thermo ON temperature:
  1. Heat pump thermos ON temp = water inlet temperature < [75°C/55°C].

| Outdoor ambient temperature | Water inlet temperature |
|---|---|
| < -10°C | 55°C |
| > -10°C | 75°C |

Thermo ON/OFF for Heat Pump in Tank Operation:

When tank temperature achieve heat pump OFF condition, refer below condition:
Conditon 1 : Tank Heater ON (Internal Tank Heater)
- Heat pump will turn OFF, water pump continue ON and room heater will continue ON if tank temperature below tank heater thermo ON condition. 3 ways valve will only switch to room side after tank temperature reach tank heater thermo OFF condition.

Conditon 2 : Tank Heater OFF (Internal Tank Heater)

- If tank temperature achieve tank thermo OFF, heat pump turn OFF, water pump turn OFF, room heater OFF and 3 ways valve switch to room side.

When tank temperature achieve heat pump ON condition, water pump ON, heat pump ON and room heater turn OFF.

Heat pump OFF condition at Tank Mode

- Tank temperature > tank water set temperature continuously for 20 seconds after heat pump thermos OFF due to water thermo. (Heat pump turn OFF but water pump continue ON and room heater turn ON to achieve tank set temperature) **OR**
- Tank temperature > tank set temperature + [1°C] for continuously 20 seconds. (Heat pump OFF, water pump OFF, room heater OFF and 3 ways valve switch to room side)

Heat pump ON condition at Tank Mode

- Tank temperature < tank water set temperature + R/C setting (Tank re-heat temp) (Water pump turn ON OR continue ON, heat pump ON and 3 ways valve switch to tank side or maintain at tank side)

Tank heater control

- Internal heater only operates to tank side if Tank heater ON and backup heater is enable.

Internal heater turn ON condition:

- Tank temperature < tank set temperature **AND**
- Heat pump thermos OFF **AND**
- 20 minutes from previous heater off **AND**
- Internal tank heater selects USE from control panel.

Internal heater turn OFF condition:

- Tank temperature > tank set temperature for continuously 15 seconds **OR**
- Heat pump thermo ON **OR**
- Mode change or operation is off by control panel.

### 14.1.10 Heat + Tank Mode Operation

1. 3 ways valve control:
   - 3 ways valve switch to room side during room heat-up interval and switch to tank side during tank heat-up interval. Both modes will switch alternately. Tank mode is the initial running mode of Heat + Tank mode.

2. Heat pump operation control:
   - During room heat-up interval
     - Follow normal heating operation.
       Switching to tank side depends to below cases:
       Case 1:
       [Previous switch from tank interval to room interval due to thermo OFF]
     - Switch to tank heat-up interval when Tank temp < Tank thermos ON temp (Room heat-up interval ends)
       Case 2:
       [If heating operation at room side is less than 30 minutes and switch to tank side 3 times consecutively]
     - Maintain at room heat-up interval regardless of the tank temperature. Switch to tank heat-up interval only when (Room Interval Timer is complete **OR** Room heat pump thermo OFF) **AND** Tank temperature < Tank thermo ON temperature.
       Case 3:
       [Previous switch from tank interval to room interval due to tank interval timer is complete]
     - Maintain at room heat-up interval regardless of the tank temperature. Switch to tank heat-up interval only when (Room Interval Timer is complete **OR** Room heat pump thermo OFF) **AND** tank temperature < Tank thermo ON temperature.
   - During Tank heat-up interval
     - Tank interval is the first mode running when heat + tank mode is select.
     - Switch to room interval only when tank achieve tank thermo OFF **OR** tank heat-up interval timer is complete.
     - Heat pump operates according to normal tank mode operation.

3 Room heater control:
- During heating heat-up interval
  - Follow normal room heater control operation.

4 Tank heater control:
- During heating heat-up interval
  - Internal tank heater will not function under heating heat-up interval.
- During tank heat-up interval
  - Internal tank heater will turn ON after heat pump thermo off to boil tank temperature to tank set temperature.
- 2 ways valve control is open
- Indoor water pump control:
  - Indoor water pump always turn ON if room heat pump thermo ON **OR** Tank thermo ON.

### 14.1.11 Cool + Tank Mode Operation

1 3 ways valve control:
- 3 ways valve switch to room side during room cooling interval and switch to tank side during tank heat-up interval. Both mode will switch alternately. Tank mode is the initial mode of cool + tank mode.

2 Heat pump operation control:
- During room heat-up interval
  - Follow normal cooling operation.
    Switching to tank side depends to below cases:
    Case 1:
    [Previous switch from tank interval to room interval due to thermo OFF]
  - Switch to tank heat-up interval when Tank temperature < Tank Thermo ON temperature (Room interval will ends)
    Case 2:
    [If cooling operation at room side is less than 30 minutes and switch to tank side for 3 times consecutively]
  - Maintain at room cooling interval regardless of the tank temperature. Switch to tank heat-up interval only when (Room Interval Timer is complete **OR** Room heat pump thermo OFF) **AND** Tank temperature < Tank thermo ON temperature.
    Case 3:
    [Previous switch from tank interval to room interval is due to tank interval timer is complete]
  - Maintain at room cooling interval regardless of the tank temperature. Switch to tank heat-up interval only when (Room Interval Timer is complete **OR** Room heat pump thermo OFF) **AND** tank temperature < Tank thermo ON temperature.

    *Tank Thermo ON temperature:

| | |
|---|---|
| Internal Tank Heater select USE | <Tank set temperature + R/C setting (Tank re-heat temperature) |
| Others | <Tank water set temperature + R/C setting (Tank re-heat temperature) |

- During Tank heat-up interval
  - Tank interval is the first mode running when the cool + tank mode is select.
  - Switch to room interval only when tank achieve tank thermo OFF **OR** tank heat-up interval timer is complete.
  - Heat pump operates according to normal tank mode operation.

3 Room heater control:
- During room cooling interval
  - Room heater is OFF and not operates.

4 Tank heater control:
- During room cooling interval
  - Internal tank heater will not function under room cooling interval.
- During tank heat-up interval
  - Internal tank heater will turn ON after heat pump thermos off to boil tank temperature to tank set temperature.

5 2 ways valve is close.

6 Indoor water pump control:
   - Indoor water pump always turn ON if room heat pump thermo ON **OR** Tank thermo ON.

### 14.1.12 Outdoor Fan Motor Operation

Outdoor fan motor is adjusted according to operation condition. It starts when compressor starts operation and it stops 30 seconds after compressor stops operation.

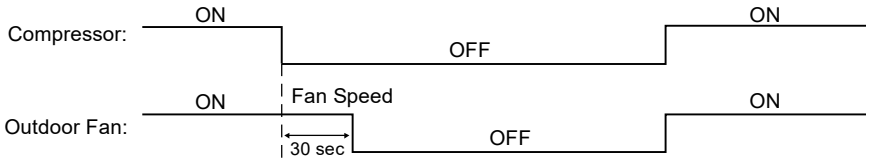


## *14.2 Water Pump*

The system will start checking on the water flow level after operation start for 70 seconds. If water pressure level is detected low or high continuously 300 seconds, the water pump and the compressor will be OFF permanently and OFF/ON control panel LED will blink (H21 error occurs).

### 14.2.1 Water Pump Control (For WH-SDC0509L3E5, WH-SDC0509L6E5 only)

- Once the indoor unit is ON, the water pump will be ON immediately and no error judgment for 70 seconds. However, during this 70 seconds operation, if there is any abnormality cause at outdoor or malfunction, the compressor should be OFF immediately and restart delay after 3 minutes.
- The system will start checking on the water flow level after operation start for 70 seconds. If water flow level is detected low continuously 60 seconds, the water pump and the compressor will be OFF permanently and OFF/ON control panel LED will blink (H62 error occurs).
- When error happens, the power has to be reset to clear the error.
- If there is no error indication, the water pump shall be continuously running.
- The water pump will remain ON when compressor OFF due to thermostat OFF setting is reached.
- Water pump will OFF when room thermo **OR** tank thermo **OR** buffer tank thermo OFF.
- Water pump will delay 15 seconds to turn OFF when request to OFF except during anti-freeze deice activate or air purge mode.

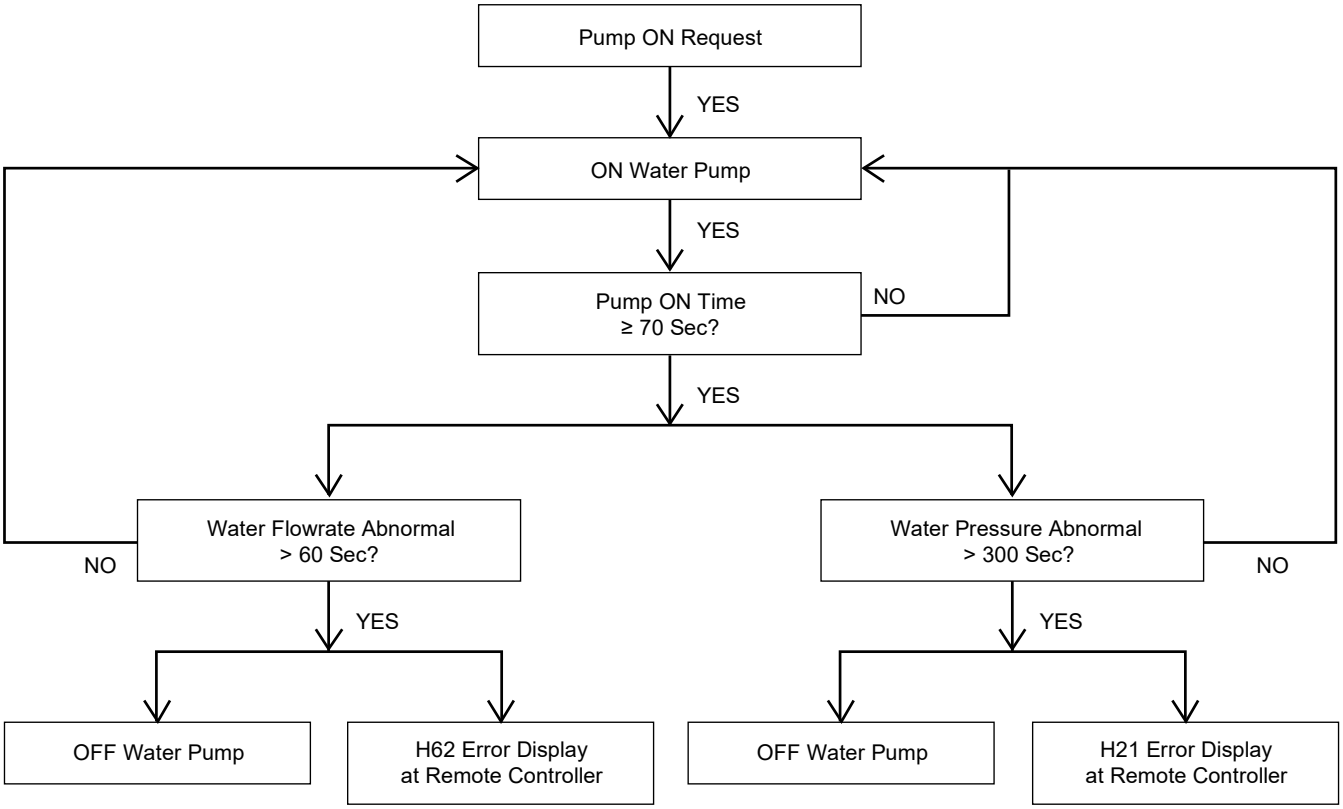

**Maximum pump speed setting on remote control**

- Standard pump speed is automatically controlled to get the designed water temperature different between water inlet and outlet (ΔT). Instead of setting the standard pump speed, maximum pump speed is manually adjusted by the installer according to water circuit pressure drop.

However, the following sequences do not follow maximum pump duty setting by remote control.

- Pump down mode
- Air purge mode
- Normal deice

1) P-Q graph for different pump HEX duty

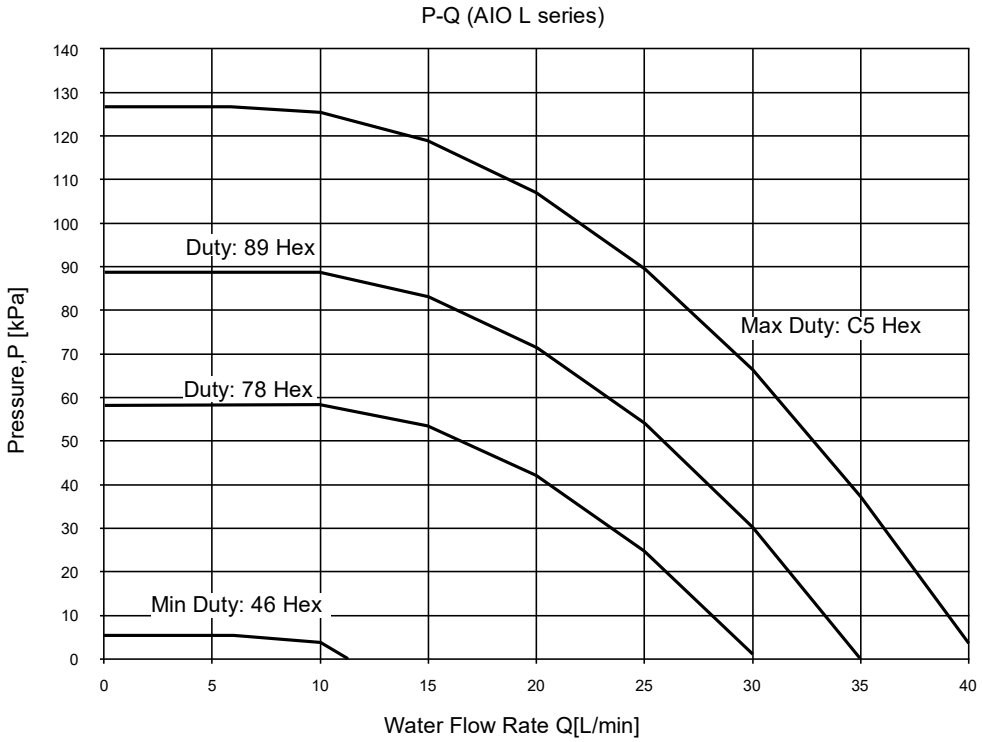


※ This condition is under connecting ODU and connecting 5m piping (inner diameter Φ25) between ODU and IDU (AIO).

### 14.2.2 Zone Water Pump Control

Purpose:

- Water pump install at each zone to circulate the water inside each zone during buffer tank connection selected "YES" or 2 zone systems.

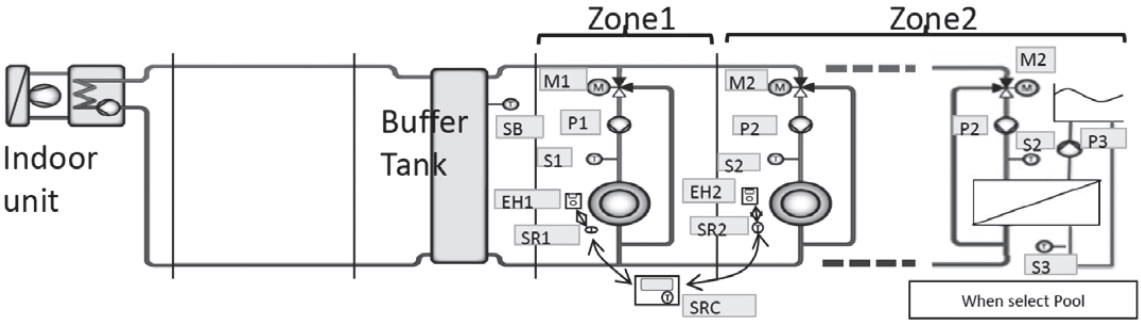


Content:

- AC type water pump install for this zone water pump control. When optional PCB connected, 230V output will drive this zone pump.
- There are three pump can be connected through Optional PCB. (Zone 1 Pump, Zone 2 Pump, & Pool Pump)

  * Zone 1 pump [P1] use to circulate zone 1 water circuit & Zone 1 mixing valve [M1] adjust to control the Zone 1 target water temperature.

  * Zone 2 pump [P2] use to circulate zone 2 water circuit & Zone 2 mixing valve [M2] adjust to control the Zone 2 target water temperature.

  * When Pool Function select as Zone 2 circuit, [P2] use to circulate water to heat exchanger which use to transfer heat to pool water.

  * Pool pump [P3] circulates the pool water through the heat exchanger to get warm water.

- Zone 1 and Zone 2 water pump start condition:
  - Zone room request ON
    (eg. Zone 1 thermo ON, only zone 1 pump will turn ON)

- Zone 1 and Zone 2 water pump stop condition:
  - Zone room request OFF

- Pool water pump start condition:
  - Pool Zone request ON **AND**
  - Pool function is selected

- Pool water pump stop condition
  - Pool zone: Zone room request OFF **OR**
  - Pool function is cancel

    * Zone 1 & Zone 2 water pump need to turn OFF when antifreeze deice pump stop control activate and turn ON back after the antifreeze deice pump stop control end under setting of "NO" buffer tank connection.

**Zone Pump Prohibit ON control:**

- Start condition:
  Zone 1 water temperature ≥ 80°C continuously for 5 minutes
  *stop zone water pump operates if the zone water fulfilled.
- Cancel condition:
  After 30 minutes from start condition fulfilled.
  *zone water pump operates according to normal condition.

**Zone Pump Control during Anti-Freeze**
Zone pump control during Zone Anti-Freeze Control:
- When Zone Anti-Freeze Flag=1, Zone Pump Turn ON.
- When Zone Anti-Freeze Flag=0, Zone Pump Turn OFF.

Zone pump control during Indoor Anti-Freeze Control:
- Zone pump only ON/OFF if the Extension PCB connected and Buffer Tank select "NO" condition

  When Indoor Anti-Freeze flag=1, Zone Pump Turn ON
  When Indoor Anti-Freeze flag=0, Zone Pump Turn OFF

* Pool Water Pump will not affected by both Indoor anti-freeze control or zone anti-freeze control.

### 14.2.3 Water Pump Speed Feedback Error

- Basically pump speed feedback is control by micon.
- When pump speed is below low limit or over high limit for a few seconds, micon detect pump error and system is stopped.
- Error detection conditions:
  - Detect abnormal water pump speed for continuous 10 secs.
  - Current pump speed < 700 rpm or
  - Current pump speed > 6000 rpm for 10 seconds.
- Control contents:
  - When error occurs, water pump, heating and heater is stopped for 30 seconds then restart again (Retry control).
  - When micon detect error again, system is stopped and error code [H20] is displayed at control panel.

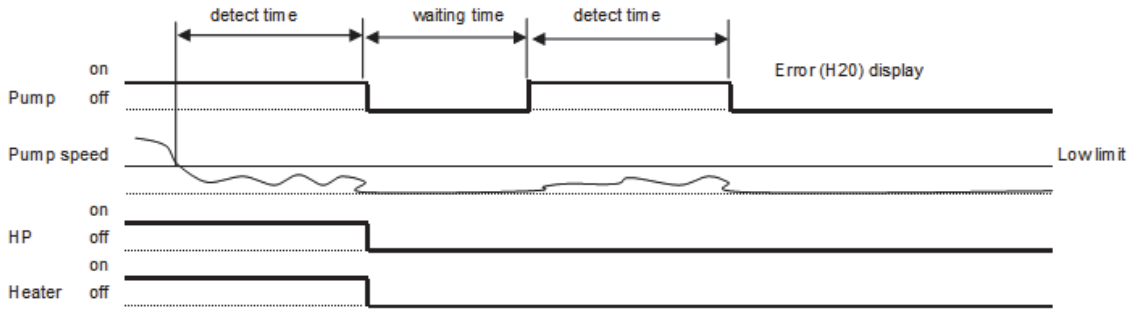

## 14.3 Indoor Unit Safety

### 14.3.1 Indoor Unit Safety Control

1 When water pump is ON, the system will start checking flow switch status (ON/OFF).
2 If the flow switch ON for 10 seconds, the system will check on the water inlet temperature for 10 seconds.
If the water inlet temperature not exceeds 80°C, the water pump shall be continuously running with normal mode.
If the water inlet temperature exceeds 80°C for continuously 10 seconds, the water pump will be OFF immediately.
3 After water pump OFF for more than 10 minutes, it will be ON back and the indoor unit safety control checking is restarted.

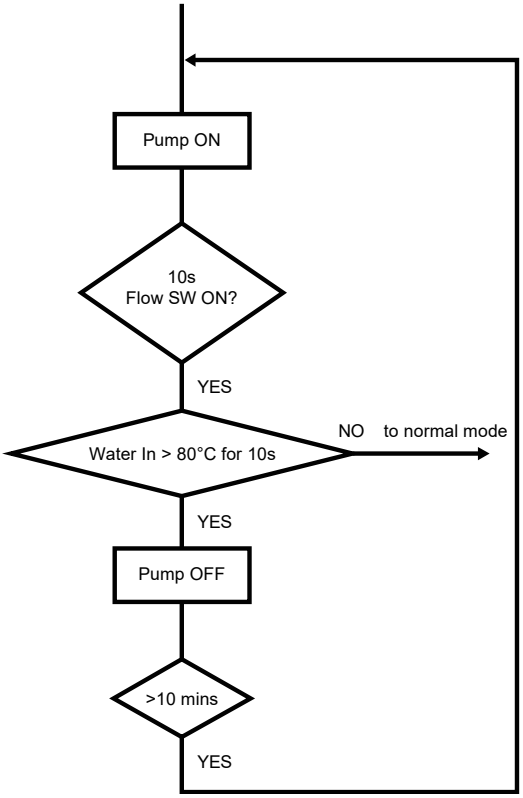


## 14.4 Auto Restart Control

1 When the power supply is cut off during the operation of Air-to-Water Heatpump, the compressor will reoperate after power supply resumes.

## 14.5 Indication Panel

| LED | Operation |
|---|---|
| Color | Green |
| Light ON | Operation ON |
| Light OFF | Operation OFF |

Note:
- If Operation LED is blinking, there is an abnormality operation occurs.

## *14.6 Indoor Back-Up Heater Control*

### 14.6.1 Indoor Electric Heater Control

1 Normal Heating Mode
- Heater On condition:
  a. Heater switch is ON
  b. After Heatpump thermo ON for **[30]** mins
  c. After water pump operate **[9]** mins
  d. Outdoor air temperature < Outdoor set temperature for heater
  e. When water outlet temperature < Water set temperature + **[-4°C]**
  f. **[20]** minutes since previous Backup heater Off
     * When heatpump cannot operate due to error happens during normal operation, heater will go into force mode automatic
     * Heater need to operate during deice operation

- Heater Stop Condition:
  a. When outdoor set temperature > outdoor set temperature + **[+2°C]** for continuous 15 secs OR
  b. When water out temp> water set temperature + **[-2°C]** for continuous 15 secs OR
  c. Heater switch is Off OR
  d. Heatpump thermo-off or OFF condition

2 Force Heater Mode
- Heater On condition:
  a. After water pump operate **[9]** mins
  b. When water outlet temperature < water set temperature + **[-4°C]**
  c. **[20]** minutes since previous Backup heater Off

- Heater Stop condition
  a. Force mode off **OR**
  b. When water outlet temperature > water set temperature + **[-2°C]** for continuous 15 secs

* Do not operate heater at the following situation
1 Water outlet temperature sensor, and water inlet sensor abnormal
2 Flow switch abnormal
3 Circulation pump stop condition

### 14.6.2 Room Heater Operation during Deice

**Purpose:**
- To protect the indoor Heat Exchanger from ice forming and prevent heat exchanger plate breakage.

**Control content:**
- This Heater protection control will activate only if the backup heater is enable at custom setup by remote controller. Once fulfil the start condition, room heater will turn ON together (base on max heater capacity selection) and stop together if stop condition is fulfilled.
  * If the heater is request to turn ON OLP feedback will be detected.

**Starting conditions:**
- During normal deice operation 4~9
- Water outlet temperature < 7°C or
  Water outlet 2 temperature < 7°C

Heater operates when 1 ~2 fulfilled.

**Stop condition:**
- When normal deice end or
- Water outlet temperature > 45°C

However, room heater keeps ON if indoor electric heater control activate.

< Deice operation time chart >

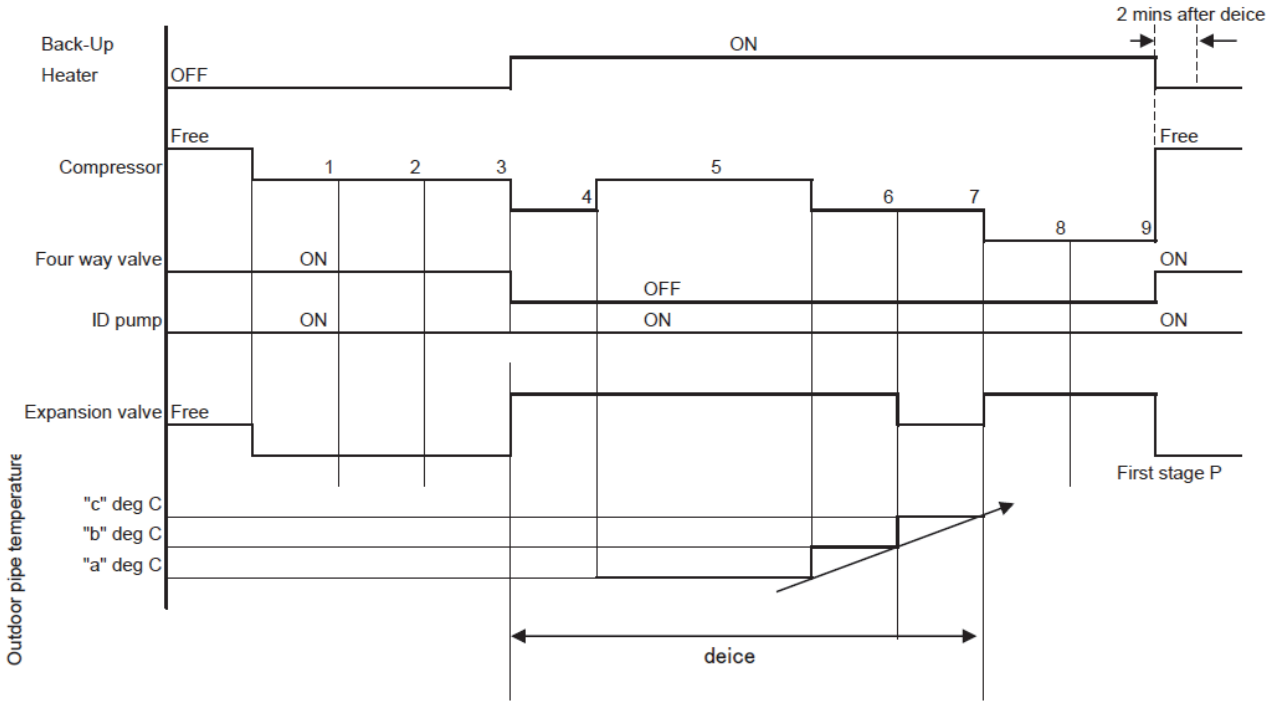


* Backup heater must Turn OFF if the water pump turn OFF.

## *14.7 Tank Heater Control*

### 14.7.1 Internal Heater Control at Tank Mode

- Internal heater turn ON condition:
  1. Internal Heater select for Tank heater by remote controller
  2. Tank Heater select ON by user.
  3. Backup Heater Enable
  4. Tank Temperature < Tank Set Temperature
  5. Heat Pump Thermo OFF
  6. 20 minutes from previous heater off.

- Room heater turn OFF condition:
  1. Tank Temperature > Tank Set Temperature + [0°C] for continuous 15 seconds. **OR**
  2. Heat Pump Thermo ON **OR**
  3. Mode Change or Operation OFF by remote controller **OR**

  * Backup Heater Turn ON/OFF all together according to the selected heater capacity.

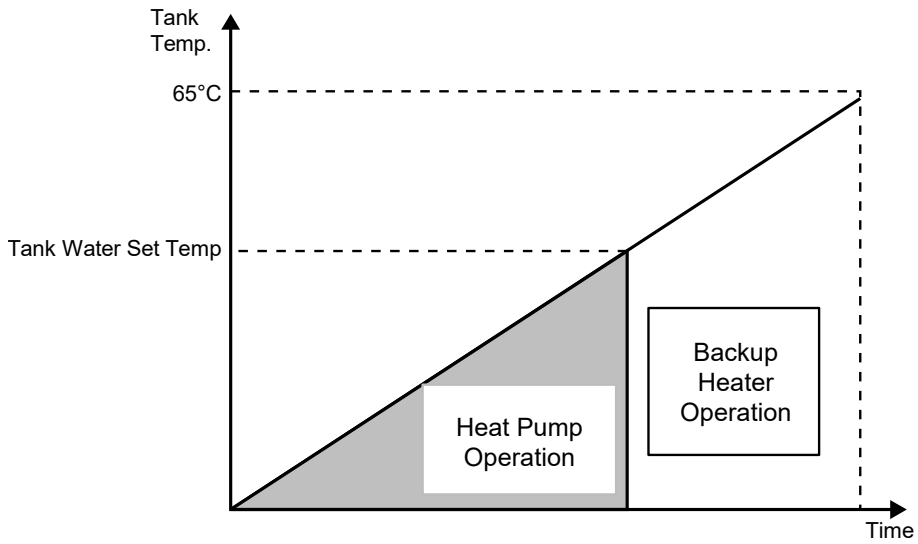

## 14.8 Base Pan Heater Control (Optional)

- To enable the base pan heater function, control panel initial setting has to be manually adjusted by activating Base Pan Heater menu.
- There are 2 optional start condition can be selected, Type A or Type B.
- Control details:

1 Type A: (Default Auto Mode)

Start conditions:

- When outdoor air temperature ≤ 3°C during heating and deice operation is ON.

Control contents:

- Base pan heater is ON during deice operation and continues ON for 10 minutes after deice operation ends.

Cancel condition:

- When outdoor temperature > 6°C after deice end or
- When operation is not at heating mode or
- Base pan heater ON timer count is completed.

2 Type B: (ON Mode)

Start conditions:

- When outdoor air temperature is ≤ 5°C and operates in heating mode, base pan heater is ON.

Cancel conditions:

- When outdoor air temperature is > 7°C or
- When operation is not at heating mode.

## 14.9 Force Heater Mode

Purpose of Force Heater Mode:

- As a backup heat source when heat pump error. Force heater Mode only control backup heater to heat up the room circuit, and turn ON back up heater or booster heater to boil up tank water base on the tank heater selection (internal or external).

Force Heater Control start condition:

- Force heater request ON by user during error OR auto turn ON by remote controller during error **AND** (Force Heater mode can be operate regardless of mode selection, remocon will send the latest mode selection force bit by bit to indoor. Indoor will judge to turn ON heater to room side if it is heat mode selected, and turn ON heater to heat tank water base on tank heater selection)
- During Error Happen (exclude the error list below)

Error List which not allow Force Heater operation

| | | | |
|---|---|---|---|
| H12 | Capacity Mismatch | H76 | Indoor-Remote Controller Communication Error |
| H20 | Abnormal Water Pump | H95 | Abnormal Voltage Connection |
| H62 | Abnormal Water Flow | F37 | Abnormal Water Inlet sensor |
| H70 | Abnormal Back-up Heater OLP | H45 | Abnormal Water Outlet sensor |
| H74 | PCB Communication Error | | |
| [ When tank mode operate with external heater selected & tank heater select ON ] | | | |
| H73 | Abnormal tank sensor | H91 | Abnormal tank heater OLP |

Force Heater Control Stop Condition:

- Force Heater request OFF **OR**
- Operation OFF request **OR**
- Power reset **OR**
- Error of above list happens during force heater operation.

Control contents:

- After fulfill start condition, indoor will operate the force heater operation according to below mode condition
  Heat mode Only: Turn ON backup heater to achieve room heat pump target water temperature.
  Heat + Tank mode: Turn ON backup heater to heat up room **OR** Turn ON Heater to Boil up tank water.
  Cool mode Only: Water pump and backup heater will OFF in force heater mode.
  Cool + Tank mode: Operate pump and internal Heater OR External heater to Boil up tank water.
  Tank mode Only: Operate pump and internal Heater OR External heater to Boil up tank water.

* For heat mode condition, backup heater will only turn ON if the backup heater is enable regardless of Room Heater Selection.
* For tank mode condition, If internal heater selected backup heater will turn ON to boil up tank water.
If external heater selected , booster heater will turn ON to boil up tank water regardless of tank heater selection.

Room Side: (Heat Mode):
- When force heater mode start condition fulfilled, turn ON water pump and turn ON backup heater follow below control.
- Operate the 3 ways valve at room side only and turn ON 2 ways valve as heat mode operation.
- Turn ON the zone pump and mixing valve if system select 2 zone system or Buffer tank connect YES, control according to normal zone pump and mixing valve control.
- When Force heater mode stop condition fulfilled, turn OFF heater as below condition and turn OFF water pump after pump delay time.

Backup Heater On Condition:
- When Force Heater Control start condition fulfill **AND**
- After water pump operate 2 minutes **AND**
- When water outlet temperature < water set temperature + [-4°C] **AND**
- 20 minutes since previous Backup heater Off **AND**
- Backup Heater Enable

Backup Heater Stop condition:
- Force mode off **OR**
- Operation off **OR**
- When water outlet temperature > water set temperature + [-2°C] for continuous 15 secs **OR**
  * ON/OFF follow normal heater sequence.

Tank side (Tank mode):
- When tank mode select and force heater bit received, turn ON backup heater (INTERNAL) or Booster Heater (External) depend on the tank heater selection.
- If tank heater selection is INTERNAL, follow normal thermo judgement to switch 3 ways valve to tank side and room side.
- If tank heater selection is EXTERNAL, only turn ON booster heater according to tank thermo.

<u>Tank Heater selection is INTERNAL:</u>
Backup Heater ON Condition:
- After water pump operate 2 mins **AND**
- When tank temperature < Tank set temperature - [Remocon Set Tank Re-heat Temp] **AND**
- 20 minutes since previous Backup heater OFF **AND**
- Backup Heater Enable

Backup Heater OFF condition:
- Force mode off **OR**
- When tank temperature > Tank set temperature for continuous 15 secs **OR**
- Tank Operation OFF

<u>Tank Heater selection is EXTERNAL:</u>
Booster Heater ON condition:
- Force Heater mode ON **AND**
- Tank temperature < tank set temperature + [Remocon Set Tank Re-heat Temp] - 1°C, **AND**
- 20 minutes since previous heater off.

Booster Heater OFF condition:
- Tank temperature > tank set temperature for continuous 15 secs.
- Force mode OFF
- Tank Mode Operation OFF
  (During tank interval or tank mode condition, water pump and 3 ways valve will OFF)

## 14.10 Powerful Operation

Powerful mode is use to increase the capacity of heat pump to achieve higher target temperature. Powerful mode is applicable when heat mode is operating.

**Remote control setting:**
On quick menu of remote control, there is 4 options of powerful mode can be select.
- OFF : Cancel powerful mode
- 30 minutes : Set powerful for 30 minutes
- 60 minutes : Set powerful for 60 minutes
- 90 minutes : Set powerful for 90 minutes

**Control contents:**
During the time set by remote control, powerful will activate according to 2 shift up controls. However, this function is applicable only for heating. Remote control will transmit the signal to indoor unit once this function is select then transmit OFF signal to indoor when the timer is complete. Indoor will transmit signal to outdoor for frequency control.

Indoor setting temperature shift

- If system is standard system (Optional PCB is not connected)
  - Target water temperature will shift up to Wlo or Whi whichever higher.
- If system is extension system (Optional PCB is connected)
  - Target water Zone 1 and Zone 2 temperature will shift up to Wlo or Whi whichever higher.

  * If “Direct Type” temperature control is select, this powerful shift up setting is not effective.

- **Start condition**
  - Powerful function is select by remote control.

- **End Condition**
  - OFF/ON button is pressed.
  - Powerful function is OFF by remote control.

## 14.11 Quiet Operation

Quiet mode is use to reduce the noise of outdoor unit by reducing the frequency or fan speed.

**Quiet level**
There are 3 level (Level 1, Level 2, Level 3) to set by quick menu function on remote control.

**Control content**
Once the quiet function is select, the remote control will transmit the signal to indoor and outdoor unit.

**Start condition**
- Quiet mode is set on remote control.
- Quiet mode is request ON by weekly timer.

**Stop condition**
If any of below condition is achieve.
- OFF/ON button is pressed.
- Quiet mode is OFF by remote control.
- Quiet mode is request OFF by weekly timer.

## 14.12 Sterilization Mode

- Purpose:
  - To sterilize water tank by setting the required boiling temperature.

- Remote control setting
  - Days for sterilization function to start can be select.
  - Time of selected day to start sterilization function.
  - Boiling temperature (Internal heater is 55°C ~ 65°C)
  - Maximum operation time is 5 minutes to 1 hour.

- Start condition
  - Tank connection set to “YES” by remote control
  - Sterilization function selects “YES”.
  - Sterilization signal received from remote controller by timer.
  - Tank mode request ON.

- Stop condition
  - When boiling timer is completed. Boiling timer (Remote control set maximum operation time) start counting once tank achieve boiling set temperature **OR**
  - After 8 hours of operation since sterilization start.
  - Tank mode request OFF.

- Control content:
  - During sterilization function activation time, target tank set temperature will internally change to boiling set temperature.
  - During sterilization activates, heat pump and heater (external or internal) will operate as normal tank mode to achieve the boiling set temperature.
  - Sterilization operation will end when stop condition is fulfill.
  - After sterilization is complete, tank set temperature will resume to normal operation.

* Tank temperature may not achieve boiling set temperature if tank heater is select OFF **OR** external compressor switch.

## 14.13 Outdoor Ambient Thermo OFF Control

- Purpose:
  - Stop provides heating to room side during high outdoor ambient condition.

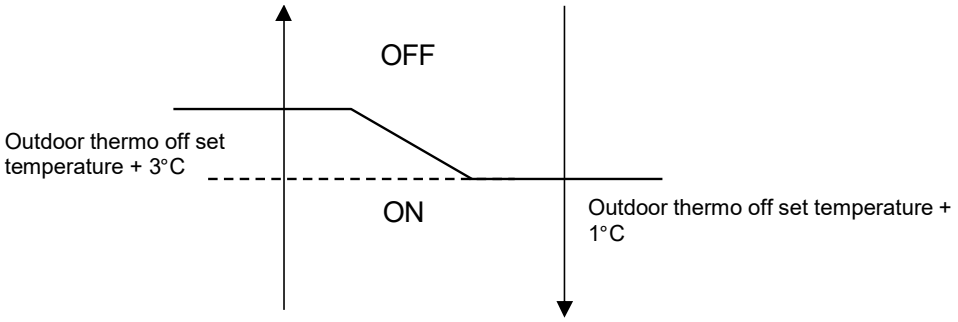


- Control content:
  - Heating outdoor ambient thermos OFF control only applicable when heat pump operate in heat mode. (This control will not activate when running in tank side)
  - Heat pump and water pump will turn OFF when outdoor ambient is higher than outdoor thermo OFF set temperature.
  - Heat pump thermos ON when outdoor ambient < outdoor thermos OFF set temperature + 1°C.

## 14.14 Alternative Outdoor Ambient Sensor Control

Purpose of the Alternative Outdoor Ambient Sensor:

- It is some possibility that the air to water heat pump unit will install at a location where the original ambient sensor is expose to direct sunlight. Therefore, another optional ambient sensor can be connect to indoor PCB and locate at new and better reading location to improve the heat pump performance.

Control Detail:

- Remocon can select either the extra outdoor ambient sensor is connected or not. (YES/NO)
- The alternative outdoor ambient sensor will connect to indoor unit main PCB terminal.

  - when alternative sensor select NO
    - Original Outdoor temperature sensor will use for Indoor & Outdoor heat pump operation reference sensor.
    - Data communication direction : OUTDOOR send outdoor temperature reading to INDOOR.
    - Error judge : OUTDOOR will judge the original outdoor sensor error (F36 display if error detect). No judge error on alternative outdoor sensor

  - when alternative sensor select YES
    - Alternative Outdoor temperature sensor will use for Indoor & Outdoor heat pump operation reference sensor.
    - Data communication direction : INDOOR send outdoor temperature reading to OUTDOOR.
    - Error judge : INDOOR will judge the Extra outdoor sensor error only after operation ON request received from remocon.
      (F36 display if error detect). No judge error on original outdoor sensor.

## 14.15 Force DHW mode

Purpose:
When user want to use hot water now, user can press this force DWH mode under the quick menu to operate tank only mode to boil up the tank temperature.

Remocon setting:
Force DHW function can be activate under quick menu.

Control Content:

- when press the Force DHW function during operation OFF condition:
  - When receive this Force DHW bit from remocon, indoor will run tank only mode regardless of the mode selection.
  - After tank temperature achieve tank thermo off temperature, turn OFF force DHW bit and return to operation OFF with previous mode selection.
- When press the Force DHW function during operation ON condition:
  - When receive this Force DHW bit from remocon, indoor will memories the running mode and run tank only mode regardless of the mode selection.
  - After tank temperature achieve tank thermo off temperature, turn OFF force DHW bit and return to previous memories running mode.

    * when operation OFF or mode change request from remocon during force DHW mode operation, End force DHW mode and follow the new request operation.

    * Once receive force DHW mode from remocon, indoor direct start tank mode and consider tank thermo ON. Thermo OFF only when achieve tank thermo OFF depend on the Tank System Setting.

## 14.16 SMART DHW mode

Panasonic All In One model provide the option to choose STANDARD DHW Mode or SMART DHW Mode for Tank Heat Up according to requirement. SMART DHW mode comparatively consume lower tank heat up power but longer re-heat time than STANDARD DHW Mode.

SMART DHW control

- During SMART DHW start time 20:00 (Default Setting) to SMART DHW stop time 05:00 (Default setting)
  Heat pump re-heat the tank water only when tank temperature drop below 20°C (Default setting)

- Time between 05:00 to 20:00
  Heat pump reheat the tank water when tank temperature as below condition

Condition 1: Tank Heater ON
Reheat when tank temperature below tank set temperature + R/C (Tank re-heat Temperature) - 3°C

Condition 2: Tank Heater OFF
Reheat when tank temperature below Tank set temperature or 52°C (Whichever lower) + R/C (Tank re-heat Temperature) -3°C

* SMART DHW start time, stop time and SMART ON Temperature can change in CUSTOM menu.

## 14.17 Anti Freeze Control

- Anti freeze protection control menu can be set YES or NO by control panel.
- In heatpump system, there are 3 types of anti freeze control:
  1. Expansion tank anti-freeze control
     - Expansion tank anti freeze heater ON condition:
       - Outdoor ambient temp. < 3°C
     - Expansion tank anti freeze heater OFF condition:
       - Outdoor ambient temp. > 4°C

  2. Water pump circulation anti freeze control
     - Water pump turns ON when **ALL** below conditions are fulfilled:
       - Heatpump OFF (stand by) OR error occurs.
       - Water flowing flag is ON.
       - Water flow switch is not abnormal.
       - Outdoor ambient temp. < 3°C OR outdoor ambient temp. sensor is abnormal.
       - Water inlet/outlet temp. < 6°C.
       - After 5 minutes from previous water pump OFF.
     - Water pump turn OFF when **ANY** of below conditions is fulfilled:
       - Outdoor ambient temperature ≥ 4°C.
       - During -5°C < outdoor ambient temp. < 4°C
         - After water pump ON for 4 minutes, and water inlet temp. ≥ 8°C.
         - Else, shift to back up heater anti freeze control.
       - During outdoor ambient temp. < -5°C
         - After water pump ON for 4 minutes, and water inlet/outlet ≥ 20°C.
         - Else, shift to back up heater anti freeze control.
     - However, if flow switch is abnormal (H62), then water pump circulation anti freeze control will not activate.

  3. Back up heater anti freeze control:
     - Back up heater turn ON when **ALL** below conditions is fulfilled:
       - Water inlet/outlet temp. < 6°C.
       - Water pump circulation anti freeze control activated and water pump ON for 4 minutes.
     - Back up heater turns OFF when ANY of below conditions is fulfilled:
       - When OD temp < -5°C, Water inlet/outlet temp. > 28°C.
       - When OD temp >= -5°C, Water inlet/outlet temp. > 13°C.
     - However, if back up heater is abnormal (H70) then back up heater anti freeze control will not activate.

### 14.17.1 Zone Anti-Freeze Control

- If buffer tank selection is “NO” and Anti- Freeze function select “NO” from remote control, this control cannot activate.

Start condition:
- After [5] min from previous Zone pump off. **AND**
- Outdoor air temp < [3] °C **OR** Outdoor sensor is abnormal. **AND**
- Zone water temperature < [6]˚C **OR** Zone Sensor Short or Open

Cancel condition:
- After water Zone pump ON [4] min **AND**
- Outdoor air temp ≥ [4]°C **OR**
- During -5 °C ≤ Outdoor air temp < [4] °C **OR**
  Zone water temperature sensor > [8] °C
- During Outdoor air temp < [-5] °C
  Zone water temperature sensor > [20] °C
  *However, Zone water temperature sensor is Open or Short, Condition C and D is ignored.

## *14.18 Solar Operation (Optional)*

### 14.18.1 Solar Operation:

Solar function:
- This function allow user to control the solar pump to operate depend on the solar sensor reading compare to the tank installed. Solar pump will circulate the hot water energy store at solar panel to heat up the DHW Tank or Buffer Tank.

Solar Connection Diagram:

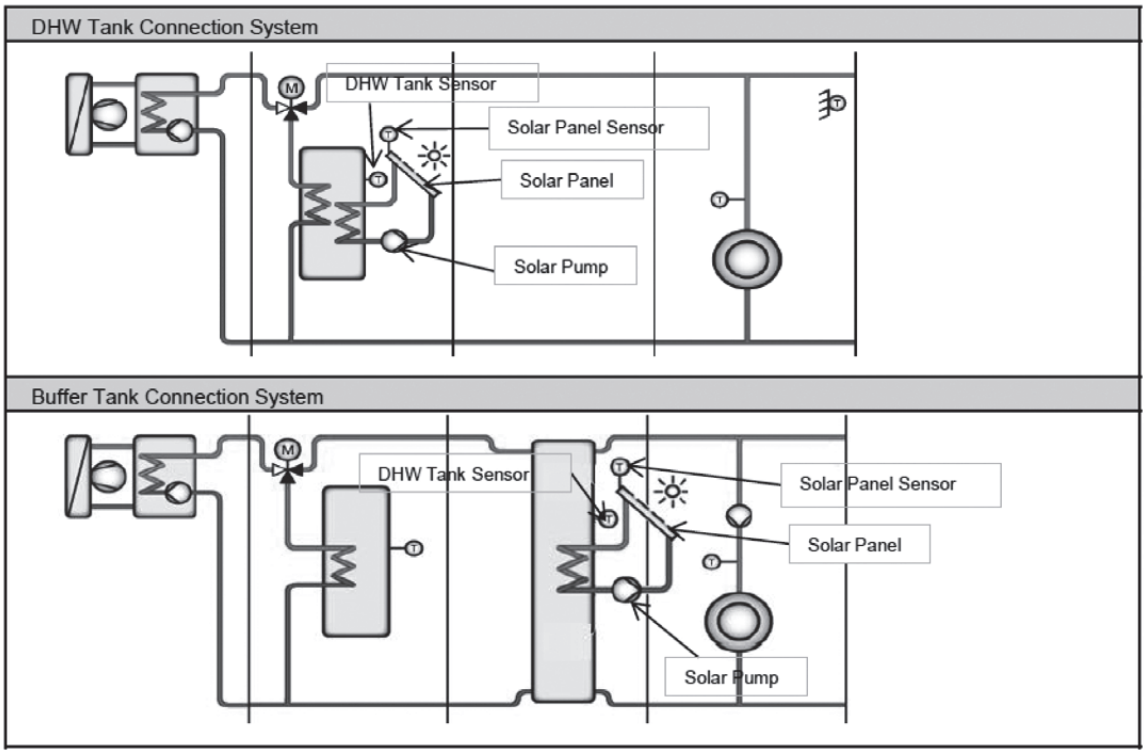


- Solar function can only enable when the Optional PCB is connected.
- Few part as below need to install to control the solar operation:
  - Solar Panel
  - Solar Pump
  - Solar Panel Sensor
  - Tank Sensor (Buffer tank sensor OR DHW Tank sensor depend on the connection direction)
    * During Solar Connection to the system, installer need to alert on the high water temperature may flow to the zone circuit or DHW piping circuit. Therefore pipe which withstand higher water temperature need to be installed.

- Solar remote control setting
  1. Solar Setting can only be set when the optional PCB connection is select "YES"
  2. By remote controller, Setting as below list can be set for solar function operation (Installer Menu)
     - Solar Function ("YES" or "NO)
     - Tank Connection Direction ("DHW TANK" or "BUFFER TANK")
     - Delta T turns ON: Difference temperature setting between solar panel sensor and Tank to turn on solar pump. (Range :5 ~ 15°C)
     - Delta T turns OFF: Difference temperature setting between solar panel thermistor and Tank to turn off solar pump. (Range :2 ~ 10°C)
     - Outdoor temp for Anti-Freeze : Outdoor temp to start Anti-Freeze control for solar circuit. (Range : -20 ~ 10°C)
     - Tank Temperature HI Limit Set (Range : 70 ~ 90°C)

### 14.18.2 Solar Operation Control

- Solar function can only be activate if the solar function selection “YES” from remote control. To achieve hot water from solar panel, indoor need to control the solar pump and circulate hot water from solar panel.

  <u>Under normal case:</u>
  - Solar pump start condition:
    - Solar panel temperature > Delta T turn on setting temp (R/C) + Tank temperature (depend on selection, DHW or Buffer) **AND**
    - Tank temperature (DHW or Buffer) < Solar HI Limit Temp (R/C) **AND**
    - Operation ON with heat mode (apply to solar connect to "Buffer Tank" case)

    * Condition c) ignore if the solar system is connect to DHW tank (control active under operation OFF time for Tank connection case)

  - Solar pump stop condition:
    - Solar panel temperature < Delta T turn OFF setting temp (R/C) + Tank temperature (depend on selection, DHW or Buffer) **OR**
    - Tank hot water temp >= Solar HI Limit Temp (R/C) + [2]°C

  <u>Under solar Anti-freeze protection control:</u>
  - Solar pump start condition:
    - Outdoor temp < Outdoor temp setting for Anti-Freeze (R/C)
  - Solar pump stop condition:
    - Outdoor temp > Outdoor temp setting for Anti-Freeze + [2]°C

**However, During Cool mode this function cannot activate if Tank selection is “Buffer Tank".
**Solar pump can operate even if Heat pump is under error stop.

- Solar operation during error:
  - During Tank sensor (DHW or Buffer depend on selection) abnormal, Solar operation will not able to function.
  - During Solar Panel sensor detect OPEN (not include SHORT), Solar operation will not able to function too.

## *14.19 Boiler Bivalent Control*

- Boiler is an additional or alternative heat source to heat up the room when necessary.
- Purpose of this control is to turn ON and turn OFF the Boiler output signal when boiler heating capacity needed in the system.
- Boiler is possible to connect to DHW Tank and Buffer Tank depends on the installer.
- Boiler operation parameter need to be set on Boiler itself, indoor do not control the boiler operation direction and operation.
- There are Alternative mode, Parallel mode, & Advance Parallel mode available to select by installer to fit to the total system.

**Bivalent control selection by remote controller**

Remote control setting value:
1 Outdoor Ambient Set = (Range: -15°C ~ 15°C)

- **Alternative Mode**
  - Only one heat source operates at one time, either heat pump or boiler depends on condition.

Control detail:
During Operation ON at Heat mode or Tank mode or Heat + Tank Mode
- Boiler signal turn ON and heat pump and water pump turn OFF when:
  - Outdoor ambient < Outdoor Ambient Set **AND**
  - Boiler prohibit flag = 0

** However indoor water pump can operate when Anti-freeze control condition fulfilled.

- Boiler signal turn OFF and heat pump and water pump turn ON when:
  - Outdoor ambient > Outdoor Ambient Set + [2°C] **OR**
  - Boiler prohibit flag = 1

- **Parallel Mode**
  - Parallel mode allows heat pump and boiler ON at the same time. Boiler operates as an additional heating capacity when low heat pump capacity at low ambient condition.

Control detail:
During operation ON at Heat mode or Tank mode or Heat + Tank mode
- Boiler signal turns ON when:
  - Outdoor ambient < Outdoor Ambient Set **AND**
  - Boiler prohibit flag = 0
- Boiler signal turns OFF when:
  - Outdoor ambient > Outdoor Ambient Set + [2°C] **OR**
  - Boiler prohibit flag = 1

- **Advance Parallel Mode**
  - Advance parallel mode allow heat pump to operate and turn ON boiler only when ambient and temperature condition is fulfilled.

Remote control setting value:
1 Outdoor Ambient Set = (Range : -15°C ~ 15°C)
2 Selection of boiler connection direction. (Heat only, DHW only, Heat & DHW)
3 Setting data under Heat Direction
  - Start Temperature | START_TEMP |
  - Start Delay Timer | START_TIMER |
  - Stop Temperature | STOP_TEMP |
  - Stop Delay Timer | STOP_TIMER |
4 Setting data under DHW Direction
  - Delay Timer | DELAY_TIMER |

Control detail:
<u>During operation ON at Heat Mode</u>

- Boiler signal turns ON when
  - Outdoor ambient < Outdoor Ambient Set **AND**
  - Buffer tank temperature < Target Buffer Tank Temperature + [START_TEMP] for [START_TIMER] **AND**
  - Heat pump operate at room side AND
  - Connection of Boiler to Heating Select "YES" From installer menu **AND**
  - Buffer Tank connection select "YES" **AND**
  - Boiler prohibit flag = 0
- Boiler signal turns OFF when
  - Outdoor ambient > Outdoor Ambient Set + [-2°C] **OR**
  - Buffer Tank temperature > Target Buffer Tank temperature + [STOP_TEMP] for [STOP_TIMER] **OR**
  - Heat pump not at room side. **OR]**
  - Boiler prohibit flag = 1

<u>During operation ON at Tank Mode</u>

- Boiler signal turns ON when
  - Outdoor ambient < Outdoor Ambient Set **AND**
  - Heat pump operate at tank side for continuous | DELAY_TIMER | **AND**
  - Connection of Boiler to DWH Tank select "YES" from installer menu. **AND**
  - Boiler prohibit flag = 0
- Boiler signal turns OFF when
  - Outdoor ambient > Outdoor Ambient Set + [2°C] **OR**
  - Heat pump not operates at tank side. **OR**
  - Boiler prohibit flag = 1

**<u>Boiler prohibit flag control</u>**

Purpose:

- For product safety. Boiler signal is OFF when water temperature is too high.

Start condition:

- Water outlet ≥ 85°C continues for 5 minutes.
- Water inlet ≥ 85°C continues for 5 minutes.
- Zone1 water temp ≥ 75°C continues for 5 minutes.
- Zone2 water temp ≥ 75°C continues for 5 minutes.

<u>Contents:</u>

- After start condition fulfilled, set boiler prohibit flag = 1

Cancel condition:

- After 30 minutes from start condition fulfilled.

<u>Contents:</u>

- Set boiler prohibit flag = 0

## 14.20 External Room Thermostat Control (Optional)

Purpose:

1 Better room temperature control to fulfill different temperature request by external room thermostat. Recommended external room thermostat:

| Maker | Characteristic |
|---|---|
| Siemen (REV200) | Touch panel |
| Siemen (RAA20) | Analog |

Connection of external room thermostat:
Wire Connection and thermo characteristic of Siemen REV200:

| Setting | L/L1 (H) | Heat Thermo | L/L2 (C) | Cool Thermo |
|---|---|---|---|---|
| Set Temp < Actual Temp | Open Circuit | OFF | Short Circuit | ON |
| Set Temp > Actual Temp | Short Circuit | ON | Open Circuit | OFF |

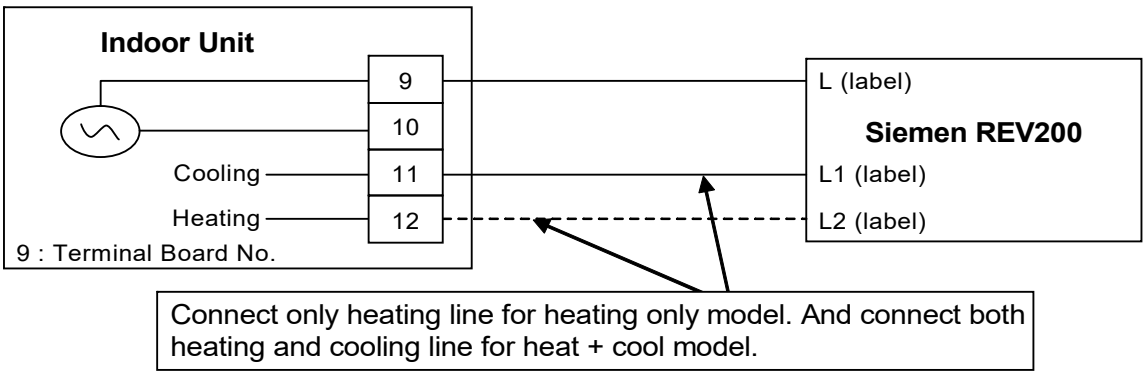


Wire Connection and thermo characteristic of Siemen RAA20:

| Setting | L/Y1 (H) | Heat Thermo | L/Y2 (C) | Cool Thermo |
|---|---|---|---|---|
| Set Temp < Actual Temp | Open Circuit | OFF | Short Circuit | ON |
| Set Temp > Actual Temp | Short Circuit | ON | Open Circuit | OFF |

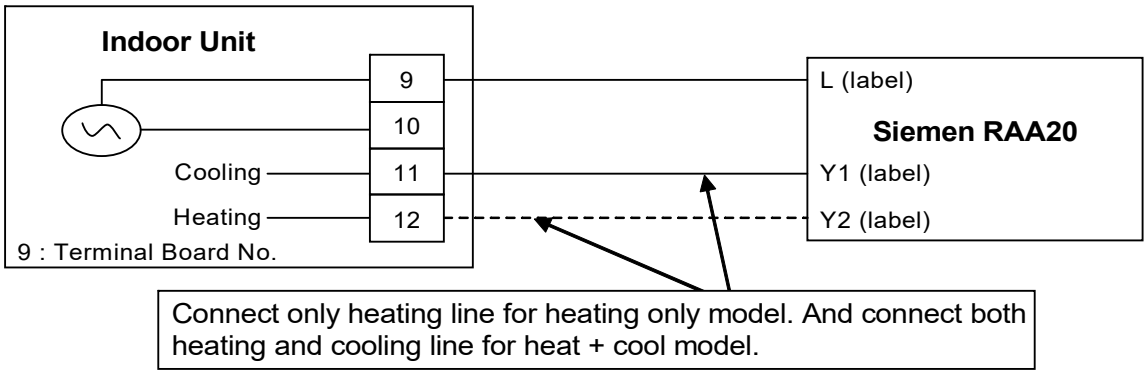


Control Content:

- External room thermostat control activate only when remote thermostat connection select YES by Indoor control panel.
- When indoor running heat mode, refer thermo On/Off from heating line feedback. And when indoor running cool mode, refer thermo On/Off from cooling line feedback.
- Heat pump Off immediately when receive thermo off feedback.

## 14.21 Three Ways Valve Control

Purpose:

- 3 ways valve is used to change flow direction of hot water from heat pump between heating side and tank side.

Control contents:

1. 3 ways valve switch Off:
   - During 3 ways valve switch Off time, the hot water will provide heat capacity to heating side.
2. 3 ways valve switch On:
   - During 3 ways valve switch On time, the hot water will provide heat capacity to tank side.
3. Stop condition:
   - During stop mode, 3 ways valve will be in switch off position.

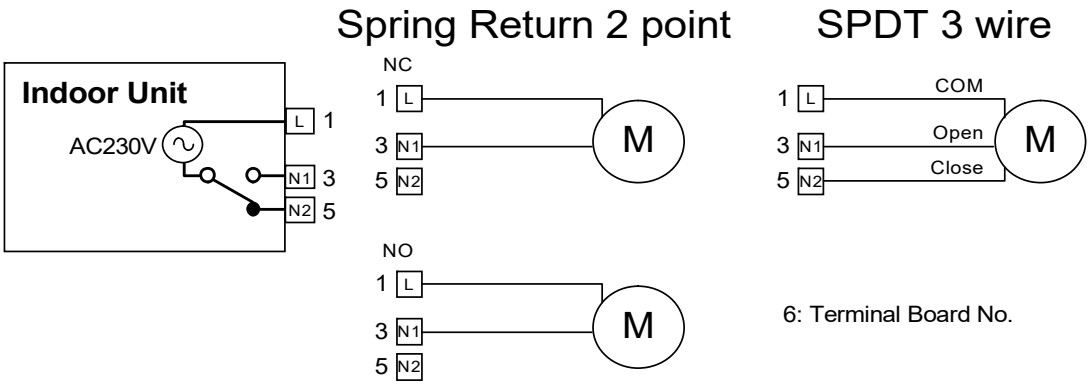


* During pump down and force mode, fix 3 ways valve in close condition.

* Recommended Parts : SFA 21/18 (Siemens)

## 14.22 Two Ways Valve Control

Functionality of 2 ways valve:

- Use to allow hot water to floor heating panel or block cold water to floor heating panel.

Control contents:

1. When indoor running in heat mode, OPEN the 2 ways valve.
2. When indoor running in cool mode, CLOSE the 2 ways valve.
3. Stop condition:
   a. During stop mode, fix 2 ways valve in close condition.

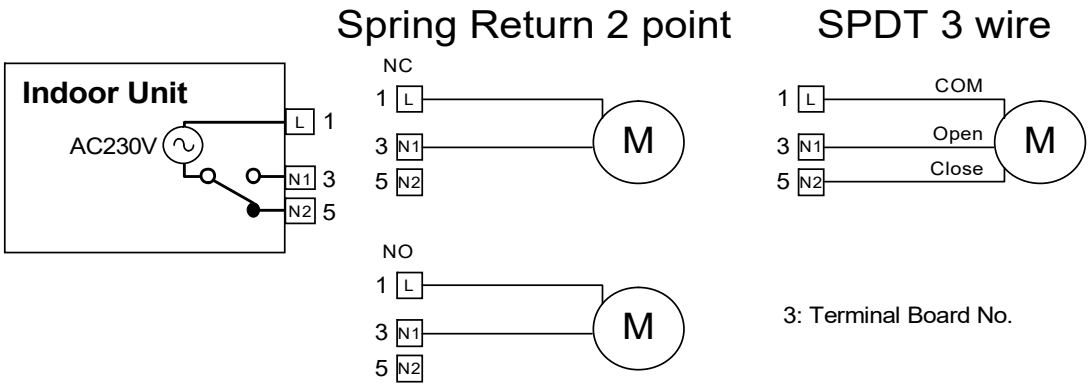


* During pump down mode, fix 2 ways valve in close condition.
* During force mode, open 2 ways valve.

* Recommended Parts : SFA 21/18 (Siemens)

## 14.23 External OFF/ON Control

- Communication circuit between indoor unit and external controller is as per below.

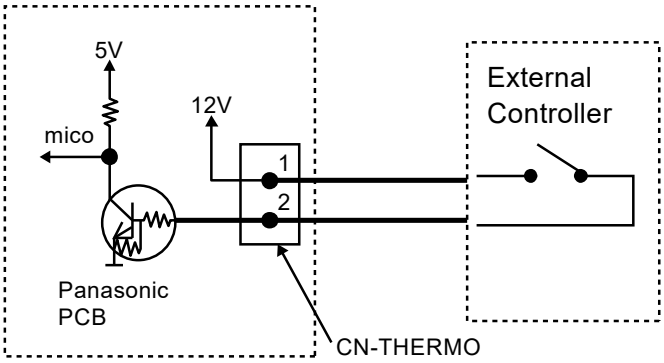


- Maximum length of communication cable is 50 meter.
- Control content:

| External Control Switch | Control Panel OFF/ON | Control Panel Power LED | System Status |
|---|---|---|---|
| ON | ON | ON | ON |
| ON | OFF | OFF | OFF |
| OFF | ON | ON | OFF |
| OFF | OFF | OFF | OFF |

Remocon Screen Display and Control Detail:

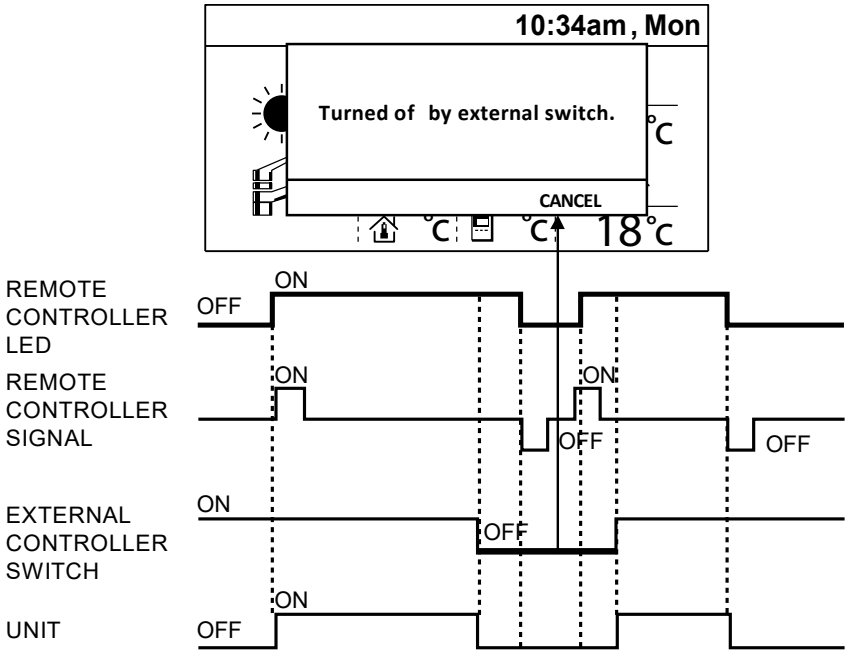


When External SW connection select "YES" from remocon installer menu:

- Heating or Cooling system will operate normally if the External Switch signal is ON.
- Once the External Switch turn OFF, System Turn OFF (Heat pump, water pump, heater etc…)
- Remocon LED remain ON or OFF according to the current operation request.
- Pop up menu at remocon main screen as above screen to inform customer system stop by External Switch.
- It is possible to press cancel and return to main screen to do change of operation setting while waiting the External Switch turn ON back.
- Remocon LED will always follow the latest changes from remocon.
- If no action on remocon for continuous 5 minutes, the pop up screen will show again on the screen.
- But once the External Switch Turn ON back, pop up screen will disappear and system can operate normally according to the latest operation setting and request.

## 14.24 External Compressor Switch (Optional PCB)

External compressor switch port can have two purpose of control as below:

- Heat source ON/OFF function (Dip switch Pin 3 on PCB "OFF")
- Heater ON/OFF function (Dip switch Pin 3 on PCB "ON")

- Heat source ON/OFF function

Purpose:

- Heat pump ON/OFF function is use to turn OFF the high power consumption device (Heat pump, & Heater) when there is energy or electric current limitation. Other optional function still can be operate under heat pump and heater OFF condition.

Control Detail:

- This External Compressor Switch is possible to connect to Optional PCB only.
- Once the remocon select External Compressor Switch connection "YES", & Dip Switch on PCB "OFF"
  This heat pump ON/OFF function will activate
- The ON/OFF signal of this External Compressor Switch is same as External Switch.
- When the External Compressor Switch is ON:
  - Heat pump system operate normally
- When the External Compressor Switch is OFF:
  - Heat pump, Indoor water pump & Heater ( Booster heater & Backup Heater ) need to turn OFF
  - Solar, Boiler and zone control can be operate follow normal control condition.
    * pump delay OFF also included in this control

  (There is NO pop up screen like External Switch when this External Compressor Switch is OFF.)

- Heater ON/OFF function

Purpose:

- Heater ON/OFF function is use to turn OFF the heater (backup heater & booster heater) when there is energy or electric current limitation. Heat pump and other optional function still can operate.

Control detail:

- This External Compressor Switch is possible to connect to Optional PCB only.
- Once the remocon select External Compressor Switch connection "YES", & Dip Switch on PCB "ON"
  This heater ON/OFF function will activate
- When the External Compressor Switch is ON:
  - Heat pump and heater operate normally
- When the External Compressor Switch is OFF:
  - Backup heater and booster heater cannot operate even heater request is ON.
  - Heat pump and option function (Solar, Boiler and zone control) can be operate follow normal control condition.

  (There is NO pop up screen like External Switch when this External Compressor Switch is OFF.)

## 14.25 Heat/Cool Switch (Optional PCB)

Purpose:

- User can switch the running mode from heat to cool or cool to heat through external installed Heat/Cool switch. This kind of heat / cool switch may built in inside the field supply room remocon as well.

Control contents:

- Heat/Cool Switch can only be set when Cool Function is "enable" at custom menu setting, & Extension PCB select "YES" & Zone 1 not set "Pool" condition.
- This heat/cool switch control will be activate only when installer set the Heat/Cool Switch "USE" through remocon.
- Once the Heat/Cool Switch Set "USE", remocon will check indoor send Signal to judge the option of mode select.
  - When Heat/Cool Switch Contact Open : Remocon only can select Heat Mode, or Heat + Tank Mode, or Tank Mode
  - When Heat/Cool Switch Contact Close : Remocon only can select Cool Mode, or Cool + Tank Mode, or Tank Mode

- Operation ON/OFF will depend on remocon request.
- When Heat Mode is running with Contact Open, user change this setting to contact close, indoor will this signal to remocon judge and change mode to cool and send back to indoor. And it is same as from cool mode change to heat mode.
  * This switch have higher priority, remocon follow indoor send signal when control activated.
  * There is no effect to the operation when the mode running is only Tank Mode.

  (Weekly Timer are ignored and cannot be set during Heat / Cool Switch is "Enable" Condition.)

## *14.26 SG Ready Control (Optional PCB)*

Purpose:

- To set ON/OFF of heat pump and target temperature by digital input of third party device if necessary in field.

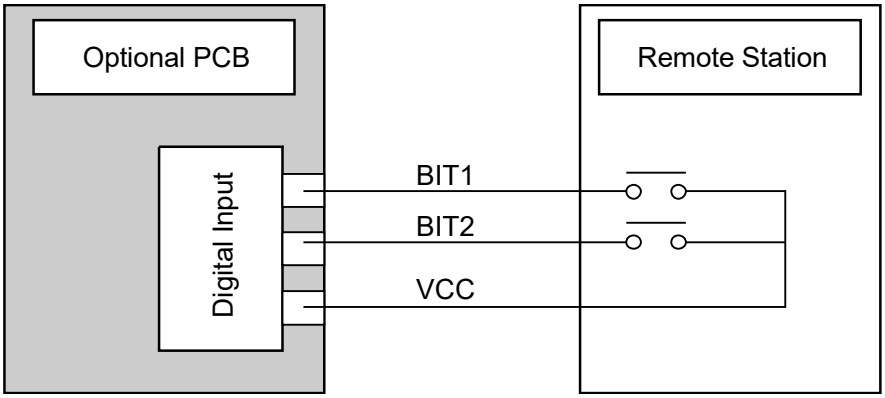


<u>Remote control setting</u>

For this function, following items need to be set on R/C (installer menu) –

- SG control = YES or NO
- Capacity up setting 1
  - Heating capacity [50 ~ 150 %]
  - DHW capacity [50 ~ 150 %]
- Capacity up setting 2
  - Heating capacity [50 ~ 150 %]
  - DHW capacity [50 ~ 150 %]

<u>Control contents:</u>

If SG control on remote control = "Yes", then following control only activate by digital input.

- **While Digital input is " 00 " (Normal operation)**
  - Normal operation. Once detect '00' system will operate back to normal condition.
    (All the target set temperature for heating side and DHW side will return back to previous set temperature when digital signal change from "10' or"11" back to "00".)
- **While digital input is detected " 01 " (HP stop)**
  - Heat pump & room heater & tank heater cannot operate.
    **(Solar control and Boiler back up and 2 Zone control can activate.)**
- **While digital input is detected " 10 " (Capacity 1)**
  - Target temperature for heating and DHW Tank is changed according to the percentage set by Remote control setting. However, which setting temperature is change depend on system setting.
- **While digital input is detected " 11 " (Capacity 2)**
  - Target temperature for heating and DHW Tank is changed according to the percentage set by Remote control setting. However, which setting temperature is change depend on system setting.
- **While digital input is detected " 10 " (Capacity 1)**
  - Setting temperature for heating and Tank is changed.
    However, which setting temperature is change depend on system setting.

**If Buffer selection is “YES”**
Room side
New Target Buffer tank temperature = Current Target Buffer Tank Temperature * Remote Control setting (" capacity 1) %
* Max Min regulation is follow Target Buffer tank temperature control specification
** No change of Target zone water temperature, only set higher buffer tank temperature.

DHW Tank side
New Tank Set Temperature = Tank Set Temperature * Remote Control setting for DHW ("Capacity 1) % * (Max regulation depend on the tank max setting limit)

**If Buffer selection is “NO”**
Room side
New Target Zone Water Temperature = Current Target Zone Water Temperature * Remote Control Setting (*Capacity 1) %
(Zone 1 and Zone 2 will change according to its own target zone water temperature.)
(Max regulation depend on the temperature control type select)

DHW Tank side
New Tank Set Temperature = Tank Set Temperature * Remote Control setting for DHW ("Capacity 1) % * (Max regulation depends on the tank max setting limit)

- **While digital input is detected " 11 " (Capacity 2)**
  - Setting temperature for heating and Tank is changed.
    However, which setting temperature is change depend on system setting.

**If Buffer selection is “YES”**
Room side
New Target Buffer tank temperature = Current Target Buffer Tank Temperature * Remote Control setting (" capacity 2) %
* Max Min regulation is follow Target Buffer tank temperature control specification
** No change of Target zone water temperature, only set higher buffer tank temperature.

DHW Tank side
New Tank Set Temperature = Tank Set Temperature * Remote Control setting for DHW ("Capacity 2) % * (Max regulation depends on the tank max setting limit)

**If Buffer selection is “NO”**
Room side
New Target Zone Water Temperature = Current Target Zone Water Temperature * Remote Control Setting (*Capacity 2) %
(Zone 1 and Zone 2 will change according to it's own target zone water temperature.)
(Max regulation depend on the temperature control type select)

DHW Tank side
New Tank Set Temperature = Tank Set Temperature * Remote Control setting for DHW ("Capacity 2) % * (Max regulation depends on the tank max setting limit)
** This function is not applicable for Cooling mode.

## *14.27 Demand Control (Optional PCB)*

Remote control setting:
- When Optional PCB connection select 'YES", Demand Control function can select "YES" or "NO".

Purpose:
- After the demand control select YES, below control will activated.
  - 0-10V Demand control

0-10V Demand control
- Demand control is use to reduce the current usage of heat pump unit by third party device.

Control start condition:
- Select “YES” at Demand control at installer menu.
- 0-10V input for this electrical current control is detected.

Control content:

- If start condition is fulfilled, indoor will receive the voltage signal from optional PCB. Indoor will send the rate value to outdoor unit.
- Outdoor will change the current limit according to the percentage receive from indoor unit.

## 14.28 Holiday Mode

- Purpose:
  Promotes energy saving by allowing the user to stop the system during holiday and enables the system to resume at the preset temperature after holiday.

- Control details:
  - Indoor operate the unit according running mode request. Target temperature will follow holiday setting temperature.
    - If heat mode request is receive, Target Water Out Temperature will change according to holiday shift temperature set.
      [If heat is set OFF at holiday, unit, water pump and zone control will OFF]
    - If tank mode request is receive, Target Tank Set Temperature will change according to the holiday tank shift temperature set.
      [If tank is set OFF at holiday, heat pump and tank heater will OFF]
  - After days of holiday have been set, heat pump will stop and only resume operation at the end of holiday countdown.

- Start condition:
  - Holiday timer set and the holiday timer start
    * The day holiday mode was set is counted as day 1.

- Stop condition:
  - OFF/ON button is pressed.
  - Holiday timer is reached.

## 14.29 Dry Concrete

- Purpose
  Provide heat to floor heating panel and dry the wet concrete during installation.

- Setting condition:
  - Dry concrete parameter can be set through remote control under system setup.
  - Parameters are possible to set up to 99 days with different target set temperature

- Control details:
  - Dry concrete mode will be activates when select ON from service setup.
  - Once start dry concrete function, remote control will send step 1 setting temperature to indoor unit.
    * This temperature is set at zone temperature. If system is 2 zones, both zone target temperature is set as same temperature.
  - Heat pump will start heat mode operation to room side with received target water outlet temperature.
    * Heat pump will operate according to Heat pump Target Water Temperature.
  - After complete day 1 setup operation, day 2 data will be send to indoor at 12.00am on the second day.
  - Each preset data will be send every day until dry concrete mode is complete, unit will turns OFF and exit dry concrete function.
  - 3 ways valve and booster heater will turn OFF and 2 ways valve will turns ON.

- Cancel condition:
  - Dry concrete mode is complete and OFF signal is received.
  - OFF signal is received by pressing OFF/ON button.

## 14.30 Flow Sensor

- The water flow sensor serves as an overload protector that shuts down the unit when the water level is detected to be low.
- Abnormal flow detection:

| Sequence | Abnormal flow | Normal flow |
|---|---|---|
| Normal case | Flow rate < 7 l/min or ≥ 69 l/min | ≥ 7 l/min |
| During status 2~6 on Anti-freeze deice | Flow rate ≥ 7 l/min | < 7 l/min |

# 15. Protection Control

## *15.1 Protection Control for All Operations*

### 15.1.1 Time Delay Safety Control

1 The compressor will not start for three minutes after stop of operation.

### 15.1.2 30 Seconds Forced Operation

1 Once the compressor starts operation, it will not stop its operation for 30 seconds.
2 However, it can be stopped using control panel at indoor unit.

### 15.1.3 Total Running Current Control

1 When the outdoor running current exceeds X value, the compressor frequency will decrease.
2 If the outdoor running current does not exceed X value, the compressor frequency will return to normal operating frequency.
3 If the outdoor running current continue to increase till exceed Y value, compressor will stop, and if this occurs 3 times within 20 minutes, system will stop operation and OFF/ON control panel LED will blink (F16 error occurs).

| | WH-WDG05LE5 | | WH-WDG07LE5 / WH-WDG09LE5 | |
|---|---|---|---|---|
| Operation Mode | X (A) | Y (A) | X (A) | Y (A) |
| Heating | 12.0 | 15.0 | 14.8 | 18.0 |
| Cooling | 12.0 | 15.0 | 14.0 | 18.0 |

A. DC Peak Current Control
1 When the current to IPM exceeds set value of 26 A, compressor will stop. Compressor will restart after three minutes.
2 If the set value exceeds again for more than 30 seconds after the compressor restarts, operation will restart after two minutes.
3 If the set value exceeds again for within 30 seconds after the compressor restarts, operation will restart after one minute. If this condition repeats continuously for seven times, system will stop operation and OFF/ON control panel LED will blink (F23 error occurs).

### 15.1.4 Compressor Overheating Prevention Control

- The compressor operating frequency is regulated in accordance to compressor tank temperature as shown in below figures. When the compressor tank temperature exceeds 107°C, compressor will stop, and if this occurs 4 times within 30 minutes, system will stop operation and OFF/ON control panel LED will blink (F20 error occurs).

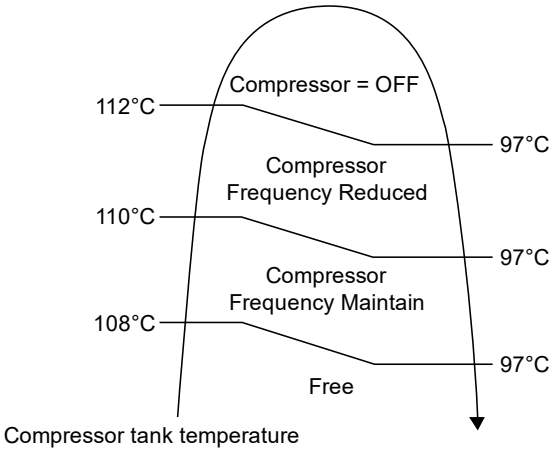

### 15.1.5 High Pressure Sensor Control

- Purpose:
  - To protect the system operation.
- Detection period:
  - After compressor on for 1 minute.
- Detection conditions:
  - When abnormal high voltage detection, 5 V or when open circuit detection 0V for 5 seconds continuously.
- After detection:
  - When abnormality is detected 4 times within 120 minutes, unit stop operation.
  - OFF/ON control panel LED will blink (H64 error occurs).

### 15.1.6 Outside Temperature Current Control

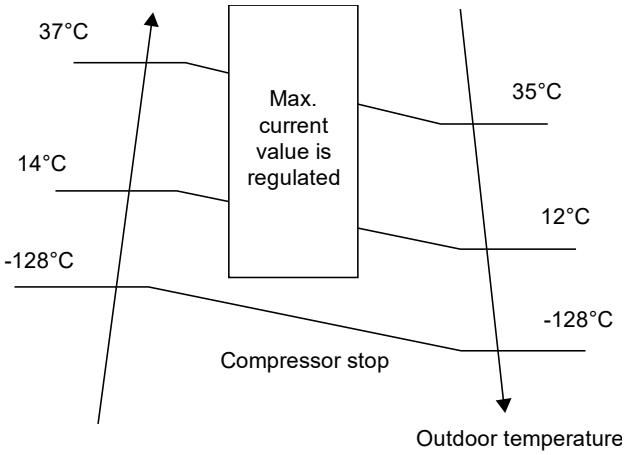


### 15.1.7 Pre-Heat Control

- Purpose:
  - For compressor protection during low outdoor ambient operation (during heating low temperature operation).
- Control content:
  a. Trigger Pre-Heat Control condition
     - When the outdoor air temperature is below than 4°C, and discharge temperature is 6°C or below.
  b. Resetting Pre-Heat Control condition
     1. When the outdoor air temperature exceeds entry condition (2°C)
     2. When the discharge temperature exceeds entry condition (2°C)

## 15.2 Protection Control for Heating Operation

### 15.2.1 Outdoor Air Temperature Control

The maximum current value is regulated when the outdoor air temperature rises above 14°C in order to avoid compressor overloading.

### 15.2.2 Deice Operation

When outdoor pipe temperature and outdoor air temperature is low, deice operation start where outdoor fan motor stop.

- Deice judging condition

Outdoor Unit Deice Control

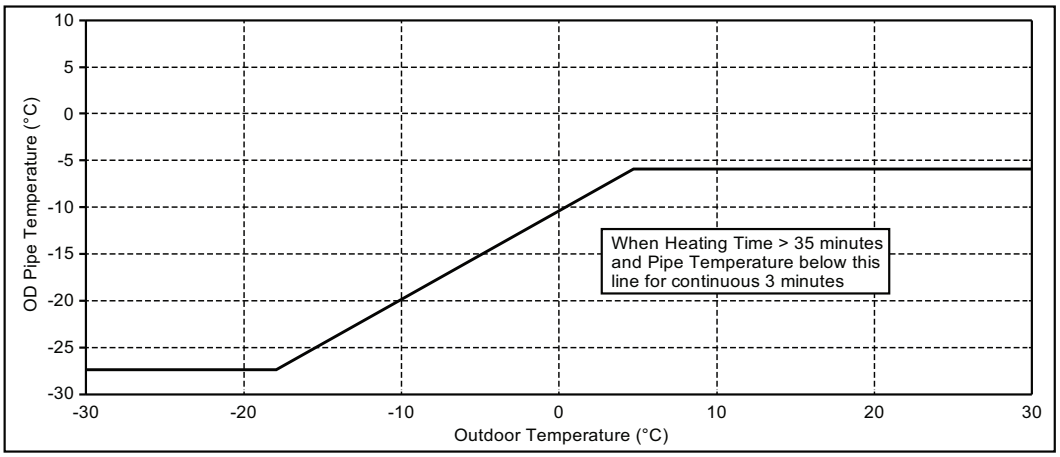


**Deice start depends:**

1. Outdoor air sensor temp.
2. Outdoor pipe sensor temp.
3. Heating accumulation time

- Deice operation time diagram

a. Deice mode 1 control:

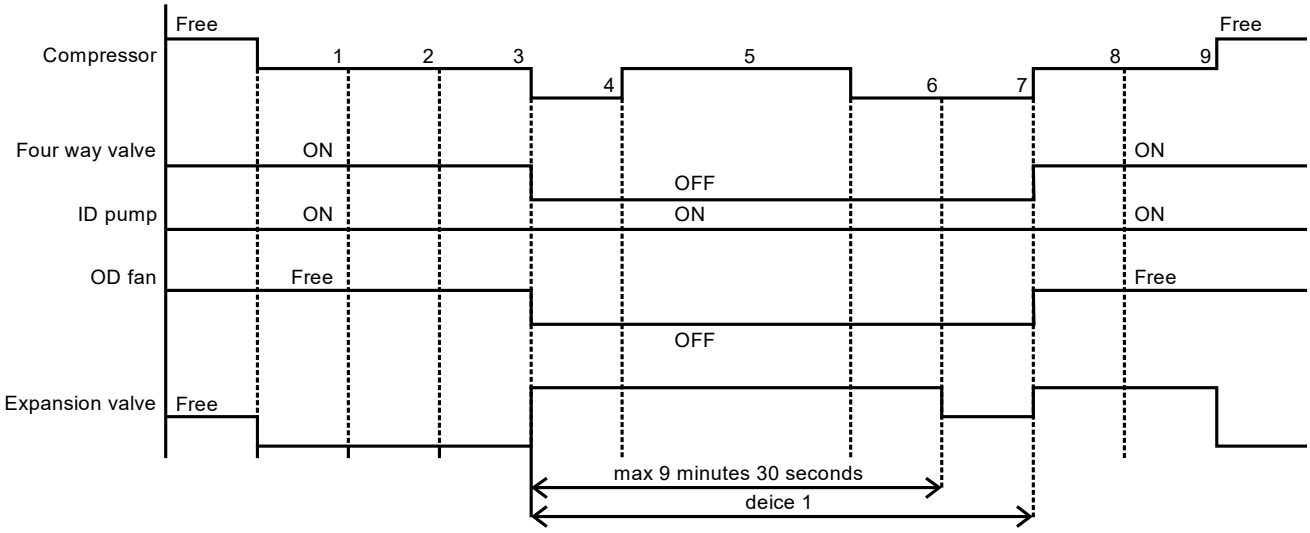

## *15.3 Protection Control for Cooling Operation*

### 15.3.1 Outdoor Air Temperature Control

- The Compressor operating frequency is regulated in accordance to the outdoor air temperature as shown in the diagram below.
- This control will begin 1 minute after the compressor starts.
- Compressor frequency will adjust base on outdoor air temperature.

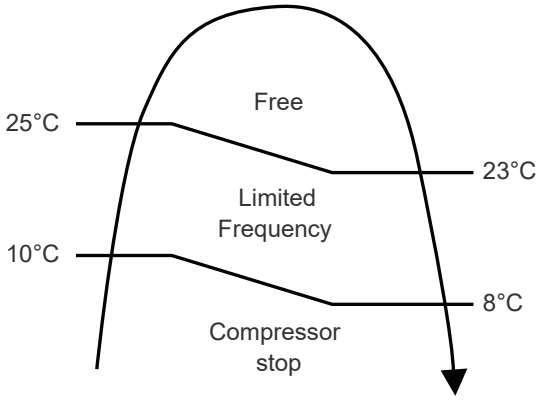


### 15.3.2 Freeze Prevention Control 1

1. When indoor heat exchanger temperature is lower than 0°C continuously for 10 seconds, compressor will stop operating.
2. Compressor will resume its operation three minutes after the indoor heat exchanger is higher than 1°C.
3. Indoor heat exchanger freeze prevention (H99) will memory in error history.

# 16. Servicing Mode

## *16.1 How to Take Out Front Plate*

Please follow the steps below for take out front plate. Before removing the front plate of Indoor Unit, always switch off all power supply (i.e. Indoor Unit power supply, heater power supply).

1. Remove the 2 mounting screws which located at bottom of the front plate.
2. Gently pull the lower section of the front plate towards you to remove the front plate from left and right hooks.
3. Hold the left edge and right edge of front plate to lift up front plate from hooks.

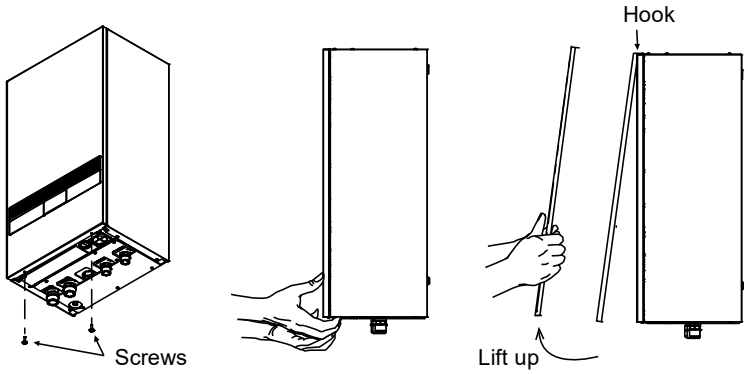


## *16.2 Test Run*

1. Before test run, make sure below items have been checked:-
   a) Pipework are properly done.
   b) Electric cable connecting work are properly done.
   c) Indoor Unit is filled up with water and trapped air is released.
   d) Please turn on the power supply after filling the Indoor until full.
2. Switch ON the power supply of the Indoor Unit. Set the Indoor Unit RCCB /ELCB to “ON” condition. Then, please refer to the Operation Instruction for operation of Remote Controller ③.

Note:
- During winter, turn on the power supply and standby the unit for at least 15 minutes before test run.
  Allow sufficient time to warm up refrigerant and prevent wrong error code judgement.

3. For normal operation, Water Pressure reading should be in between 0.5 bar and 3 bar (0.05 MPa and 0.3 MPa). If necessary, adjust the Water Pump ⑭ SPEED accordingly to obtain normal water pressure operating range. If adjust Water Pump ⑭ SPEED cannot solve the problem, contact your local authorized dealer.
4. After test run, please clean the Magnetic Water Filter Set ⑬. Reinstall it after finish cleaning.

### 16.2.1 Check Water Flow of Water Circuit

Select Installer setup → Service setup → Pump maximum speed → Air purge
Confirm the maximum water flow during main pump operation not less than 15 l/min.
*Water flow can be check through service setup (Pump Max Speed)
[Heating operation at low water temperature with lower water flow may trigger “H75” during defrost process.]
*If there is no flow or H62 is displayed, stop operating the pump and release the air (see Checking for Air Accumulation).

## 16.3 Expansion Vessel ⑪ Pre Pressure Checking

[Upper limit water volume of the system]

- The Indoor Unit has a build-in Expansion Vessel with 10 L air volume and initial pressure of 1 bar. (1bar = 100kPa = 0.1MPa)
- Total amount of water in the system should be below 200 L.
- Inner volume of Indoor Unit piping is about 5L.
- If the total amount of water is more than 200 L, please add expansion vessel (field supply).
- Please keep the installation height difference of system water circuit within 10 m. (Extra pump may be required)
- The expansion vessel volume required for the system can be calculated from the formula below.

$$V = \frac{\varepsilon \times Vo}{1 - \frac{98 + P_1}{98 + P_2}}$$

V : Required gas volume <expansion vessel volume L>

Vo : System total water volume <L>

ε : Water expansion rate 5 → 60˚C = 0.0171

$P_1$ : Expansion tank filling pressure = (100) kPa

$P_2$ : System maximum pressure = 300 kPa

- ( ) Please confirm at actual place
- The gas volume of the sealed type expansion vessel is presented by <V>.

O It's advised to add 10% margin for required gas volume of calculation.

Water expansion rate table

| Water temperature (°C) | Water expansion rate ε |
|---|---|
| 10 | 0.0003 |
| 20 | 0.0019 |
| 30 | 0.0044 |
| 40 | 0.0078 |
| 50 | 0.0121 |
| 60 | 0.0171 |
| 70 | 0.0228 |
| 80 | 0.0291 |
| 90 | 0.0360 |

[Adjustment of the initial pressure of the expansion vessel when there is a difference in installation height]
If the height difference between the Indoor Unit and the highest point of the system water circuit (H) is more than 7m, please adjust the initial pressure of the expansion vessel (Pg) according to the following formula.

Pg= (H*10+30) kPa

## 16.4 Pump Down Procedures

Refer below steps for proper pump down procedure.

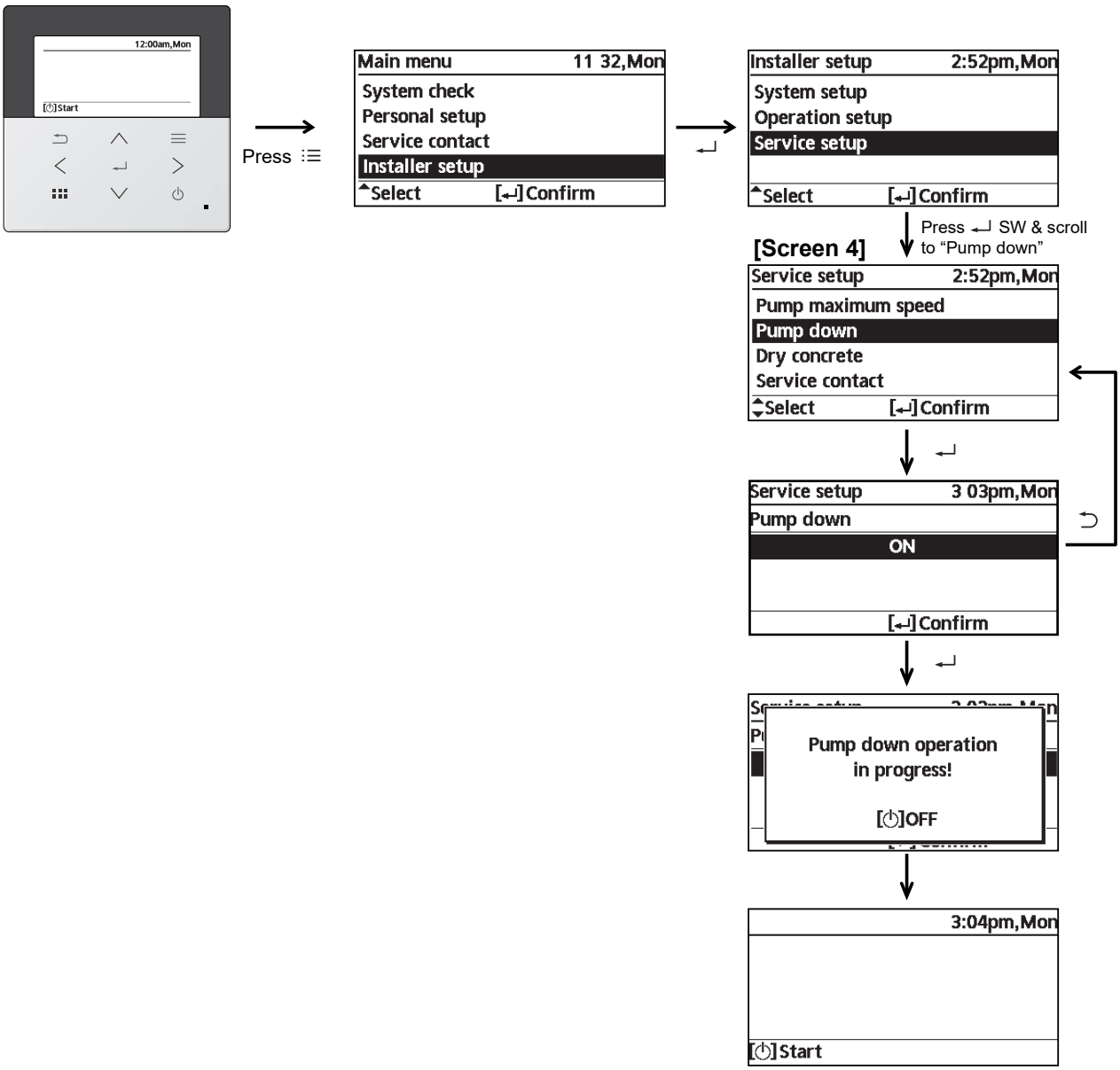

## 16.5 How To Unlock Cool Mode

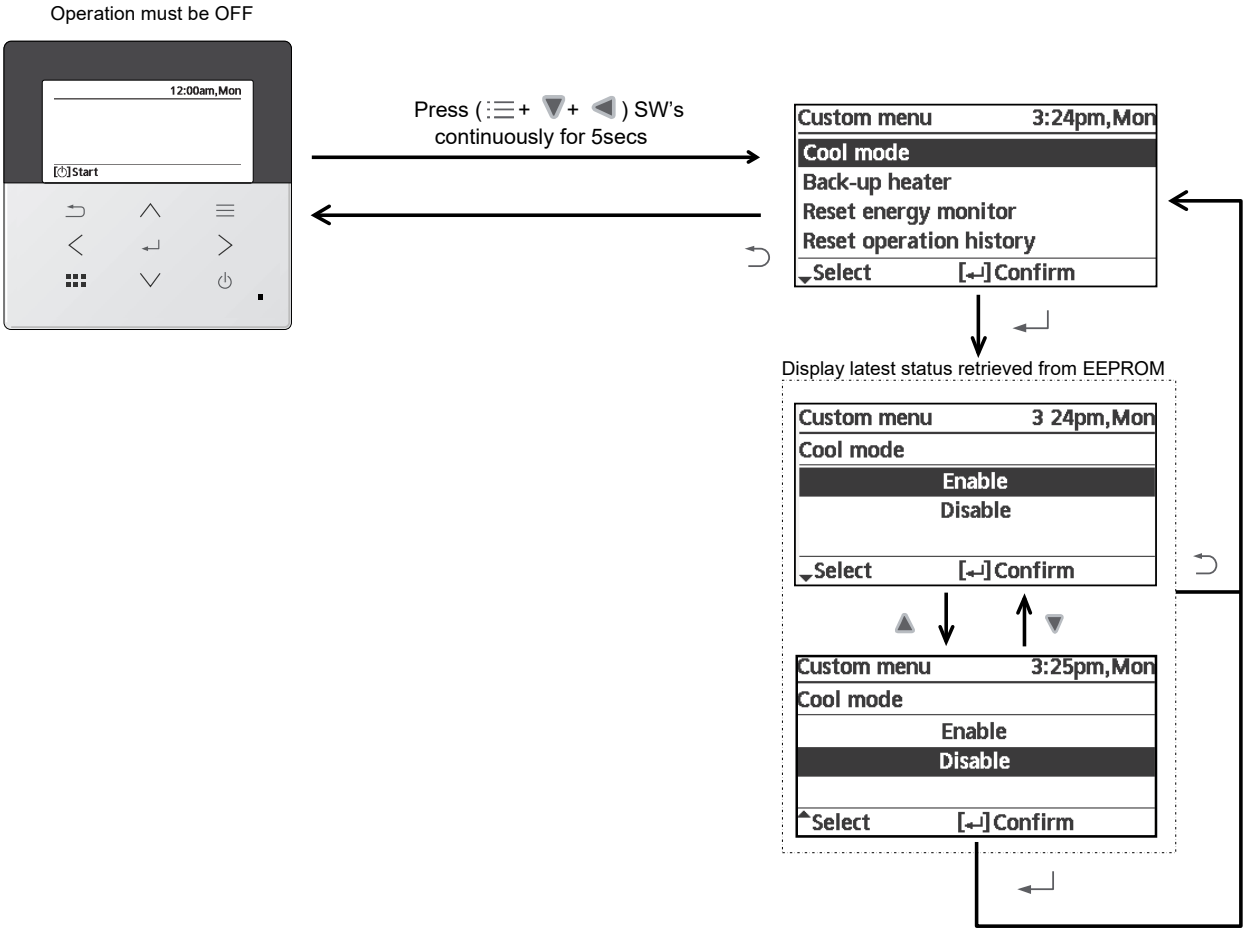

## 16.6 EEPROM Factory Default Data Setup Procedure

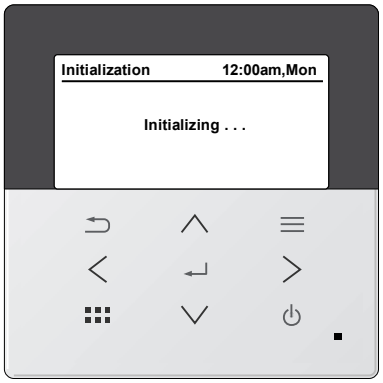


- EEPROM default data setup is only possible during initialization process.
- Press ( ▲ , ▼ , ◀ , ▶ ) simultaneously for 5secs continuously, initialization process will stop & EEPROM default data setup process will start.

During EEPROM default data setup process, display should be as shown below.

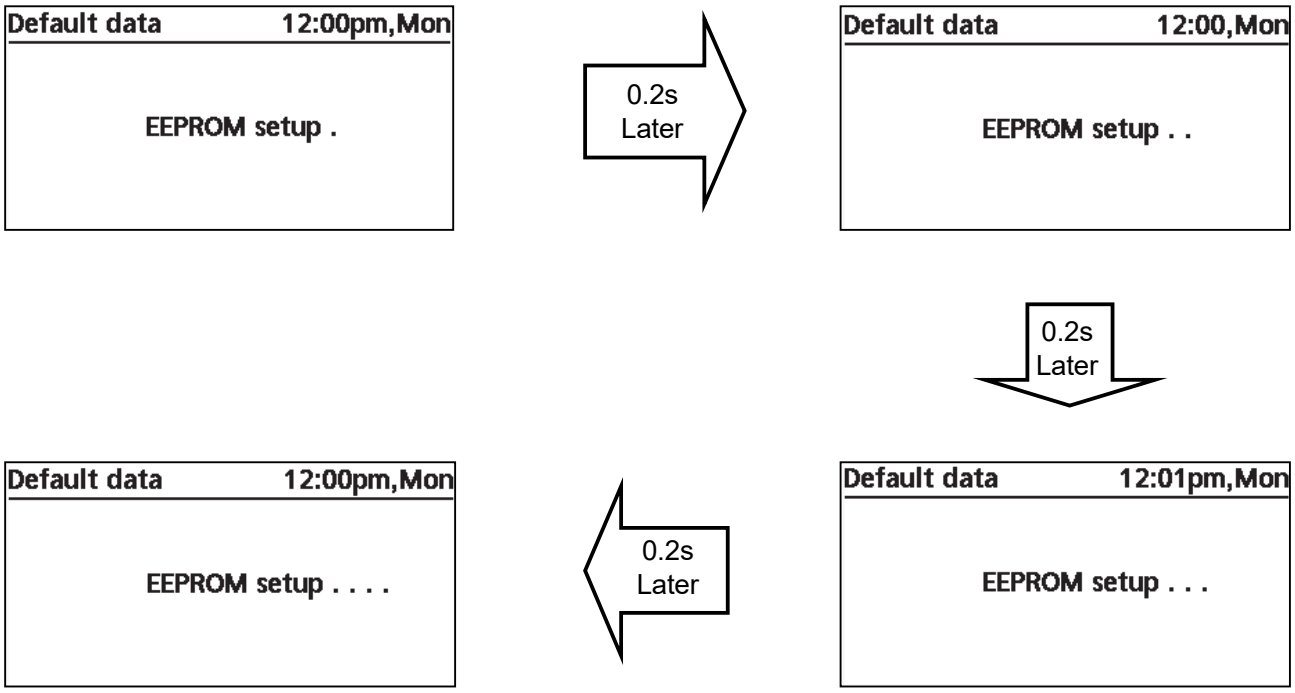


- Once EEPROM default data setup process is complete, initialization process will re-start from beginning.

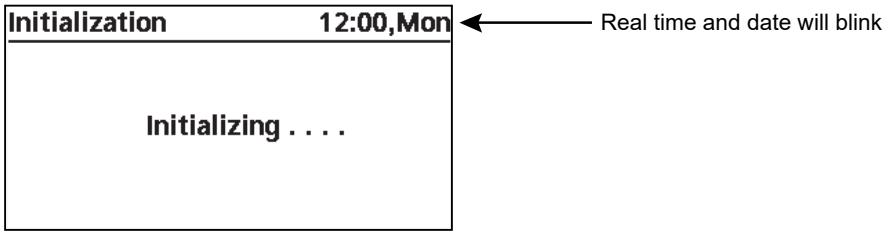

## 16.7 Dry Concrete Setup

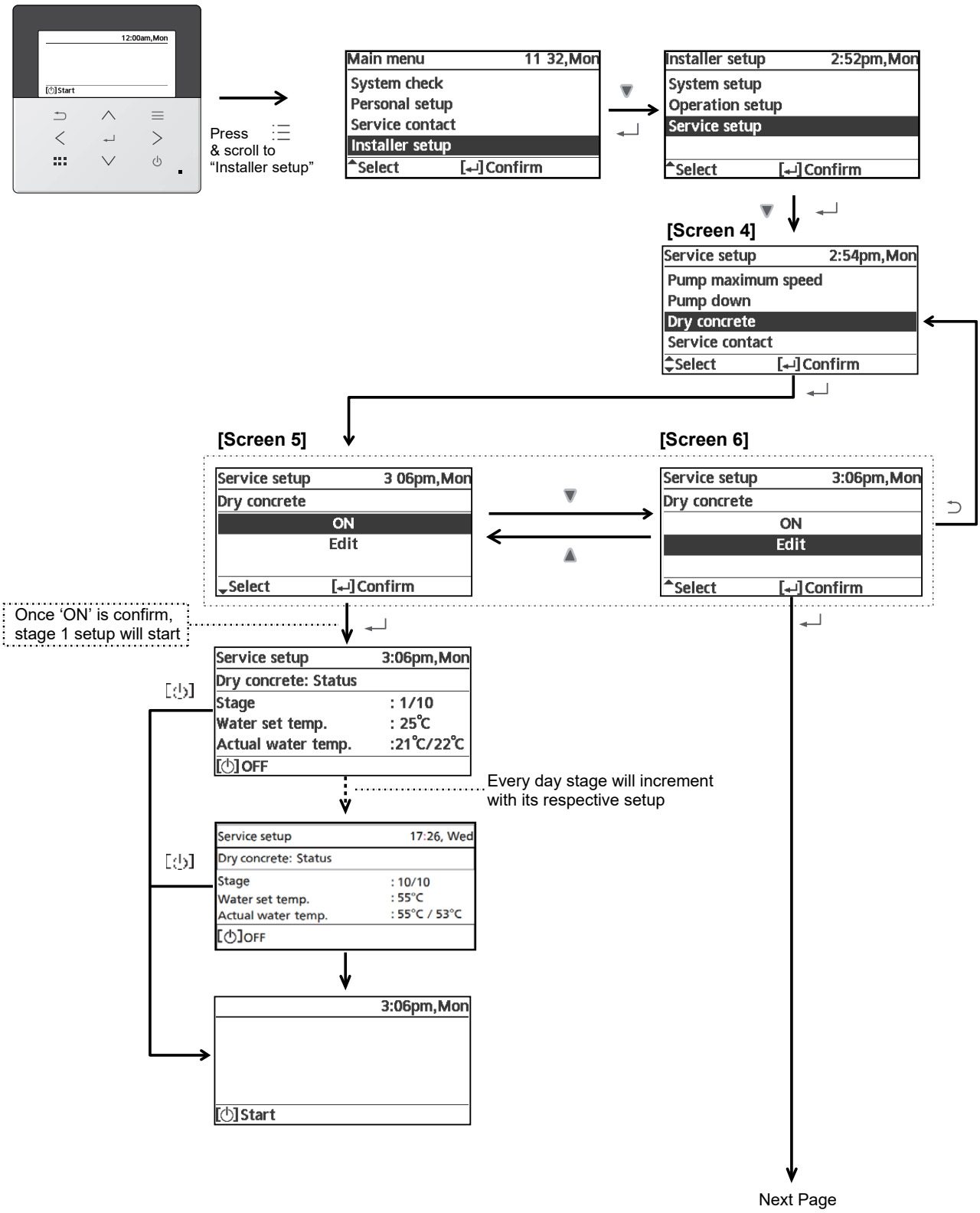

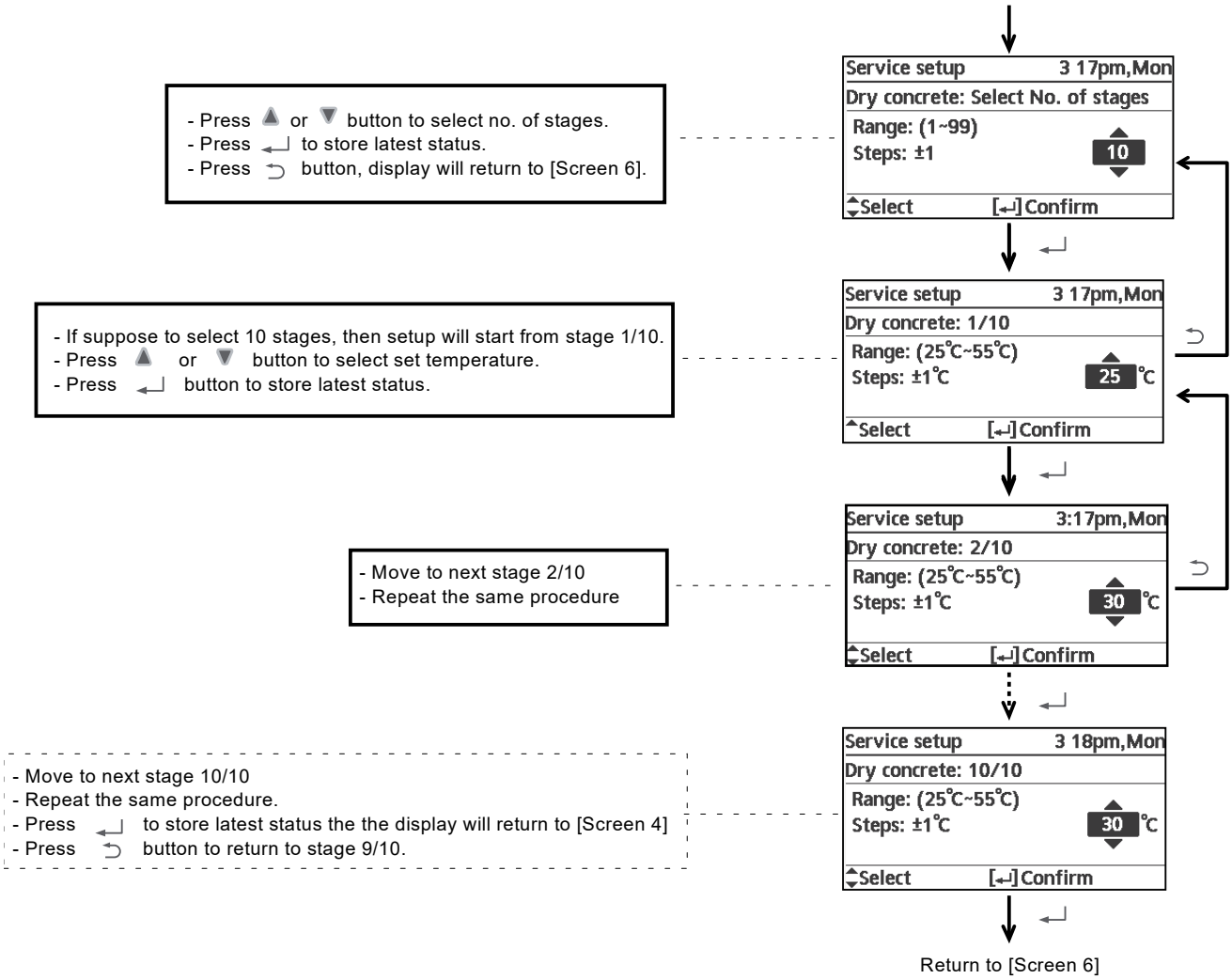
Service setup 3 17pm,Mon
Dry concrete: Select No. of stages
Range: (1~99)
Steps: ±1
10
Select [↵] Confirm
- Press ▲ or ▼ button to select no. of stages.
- Press ↵ to store latest status.
- Press ↩ button, display will return to [Screen 6].
Service setup 3 17pm,Mon
Dry concrete: 1/10
Range: (25℃~55℃)
Steps: ±1℃
25 ℃
Select [↵] Confirm
- If suppose to select 10 stages, then setup will start from stage 1/10.
- Press ▲ or ▼ button to select set temperature.
- Press ↵ button to store latest status.
Service setup 3:17pm,Mon
Dry concrete: 2/10
Range: (25℃~55℃)
Steps: ±1℃
30 ℃
Select [↵] Confirm
- Move to next stage 2/10
- Repeat the same procedure
Service setup 3 18pm,Mon
Dry concrete: 10/10
Range: (25℃~55℃)
Steps: ±1℃
30 ℃
Select [↵] Confirm
- Move to next stage 10/10
- Repeat the same procedure.
- Press ↵ to store latest status the the display will return to [Screen 4]
- Press ↩ button to return to stage 9/10.
Return to [Screen 6]

# 17. Maintenance Guide

In order to ensure safety and optimal performance of the Indoor unit, seasonal inspections on the Indoor unit, functional check of RCCB/ELCB, field wiring and piping have to be carried out at regular intervals. This maintenance should be carried out by authorized dealer. Contact dealer for scheduled inspection.

1. Charging the Water
   Make sure all the piping installations are properly done before carry out below steps.
   a. Start filling water (with pressure more than 1 bar (0.1MPa)) to the Space Heating / Cooling circuit via Tube Connector ⓐ.
   b. Stop filling water if the free water flow through Pressure Relief Valve drain pipe. (Check the Outdoor Unit)
   c. Turn ON the Indoor Unit.
   d. Remote control menu → Installer setup → Service setup → pump maximum speed → Turn on the pump.
   e. Make sure Water Pump ⑭ is running.
   f. Check and make sure no water leaking at the tube connecting points.

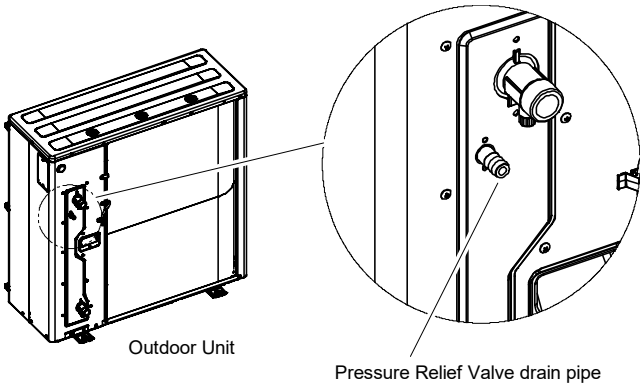


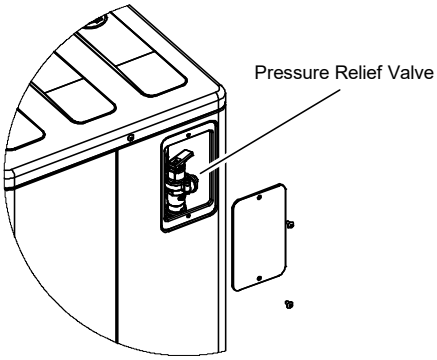


2. Check Water Pressure *(1 bar = 0.1 MPa)
   Water pressure should not lower than 0.5 bar (with inspects the Water Pressure Sensor ⑫). If necessary add water into Indoor Unit.
   Fill with water from Tube Connector ⓐ.

3. Check Pressure Relief Valve
   * Pressure Relief Valve is mounted in the Outdoor Unit.
   a. Confirm that the pressure relief valve is working properly, pull the lever horizontal direction.
   b. Release the lever when water comes out of the drain pipe of the pressure relief valve.
      (While the air continues to come out of the drain pipe, keep raising the lever to completely discharge the air.)
   c. Confirm that the water from the drain pipe stops.
   d. If water is leaking, pull the lever several times and return it to make sure the water stops.
   e. If water keeps coming out of the drain, drain water.
      Turn off the system and contact your local authorized dealer.

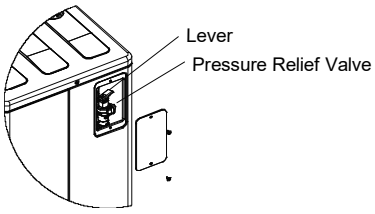

4. Check Air Accumulation
   a. Open the air vent plugs on the heating panel, fan convector, etc., and remove the air accumulated in the equipment and piping.
   b. If the outdoor unit and the indoor unit are installed on different floors, open the air vent plug on the water plug of the outdoor unit and the air vent plug on the heater bottle inside the indoor unit to remove the air.
   (be careful, water will come out)

5. Check RCCB/ELCB
   Ensure the RCCB/ELCB set to “ON” condition before check RCCB/ELCB.
   Turn on the power supply to the Indoor Unit.
   This testing could only be done when power is supplied to the Indoor Unit.

| ⚠ WARNING |
|---|
| Be careful not to touch parts other than RCCB/ELCB test button when the power is supplied to Indoor Unit. Else, electrical shock may happen.<br>Before obtaining access to terminals, all supply circuits must be disconnected. |

   a. Push the “TEST” button on the RCCB/ELCB. The lever would turn down, if it functions normal.
   b. Contact authorized dealer if the RCCB/ELCB malfunction.
   c. Turn off the power supply to the Indoor Unit.
   d. If RCCB/ELCB functions normal, set the lever to “ON” again after testing finish.

6. Reset Overload Protector
   Overload Protector serves the safety purpose to prevent the water over heating. When the Overload Protector trip at high water temperature, take below steps to reset it.
   a. Take out the cover.
   b. Use a test pen to push the centre button gently in order to reset the Overload Protector.
   c. Fix the cover to the original fixing condition.

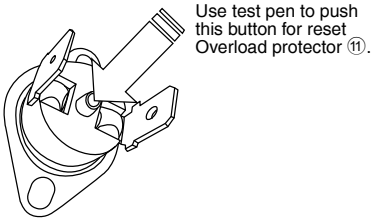


7. Maintenance for Magnetic Water Filter Set ⑦
   a. Turn OFF power supply.
   b. Place a container below Magnetic Water Filter Set ⑦.
   c. Turn to remove the Magnet Bar at bottom of Magnetic Water Filter Set ⑦.
   d. By using Allen key (8mm), remove the Cap of Discharge Port.
   e. By using Allen Key (4mm), open the Service Valve to release the dirty water from the Discharge Port into a container. Close the service valve when the container is full to avoid spillage in the tank unit. Dispose the dirty water.
   f. Reinstall the Cap of Discharge Port and Magnet Bar.
   g. Re-charging the water to Space Heating / Cooling circuit if necessary (refer Section 5 for details.)
   h. Turn ON power supply.

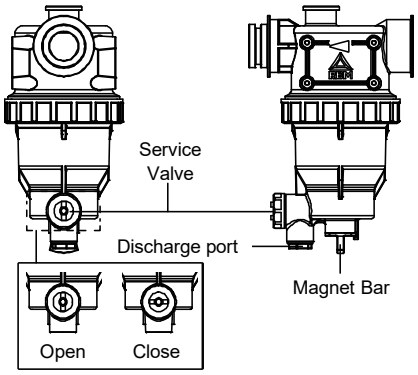

# 17.1 Maintenance for Magnetic Water Filter Set

## 17.1.1 Service and Maintenance

**If forget Password and cannot operate remote controller**

Press ⮌ + ↵ + > for 5 sec.
Password unlock screen appears, press Confirm and it shall reset.
Password will become 0000. Please reset it again.
(NOTE) Only display when it is locked by password.

## 17.1.2 Maintenance Menu

**Setting method of Maintenance menu**

| Maintenance menu | 12:00am,Mon |
|---|---|
| Actuator check | |
| Test mode | |
| Sensor setup | |
| Reset password | |
| ▼ Select | [↵] Confirm |

Press ⮌ + ↵ + > for 5 sec.

Items that can be set

① Actuator check (Manual ON/OFF all functional parts)
(NOTE) As there is no protection action, please be careful not to cause any error when operating each part (do not turn on pump when there is no water etc.)

② Test mode (Test run)
Normally it is not used.

③ Sensor setup (offset gap of detected temp of each sensor within -2~2°C range)
(NOTE) Please use only when sensor is deviated.
It affects temperature control.

④ Reset password (Reset password)

## 17.1.3 Custom Menu

**Setting method of Custom menu**

| Custom menu | 12:00am,Mon |
|---|---|
| Cool mode | |
| Back-up heater | |
| Reset energy monitor | |
| Reset operation history | |
| ▼ Select | [↵] Confirm |

Please press ≡ + ∨ + < for 5 sec.

Items that can be set

① Cool mode (Set With/Without Cooling function) Default is without (Disable)
(NOTE) As with/without Cool mode may affect electricity application, please be careful and do not simply change it.
In Cool mode, please be careful if piping is not insulated properly, dew may form on pipe and water may drip on the floor and damage the floor.

② Backup heater (Use/Do not use Backup heater)
(NOTE) It is different from to use/not to use backup heater set by client. When this setting is used, heater power on due to protection against frost will be disabled. (Please use this setting when it is required by utility company.)
By using this setting, it cannot defrost due to low Heating's setting temp and operation may stop (H75)
Please set under the responsibility of installer.
When it stops frequently, it may be due to insufficient circulation flow rate, setting temp of heating is too low etc.

③ Reset energy monitor (delete memory of Energy monitor)
Please use when moving house and handover the unit.

④ Reset operation history (delete memory of operation history)
Please use when moving house and handover the unit.

## 17.1.4 Check Water Pressure from Remote Controller

1. Press ☰ SW and scroll to "System check".
2. Press ↵ and scroll to "System information".
3. Press ↵ and search for "Water pressure".

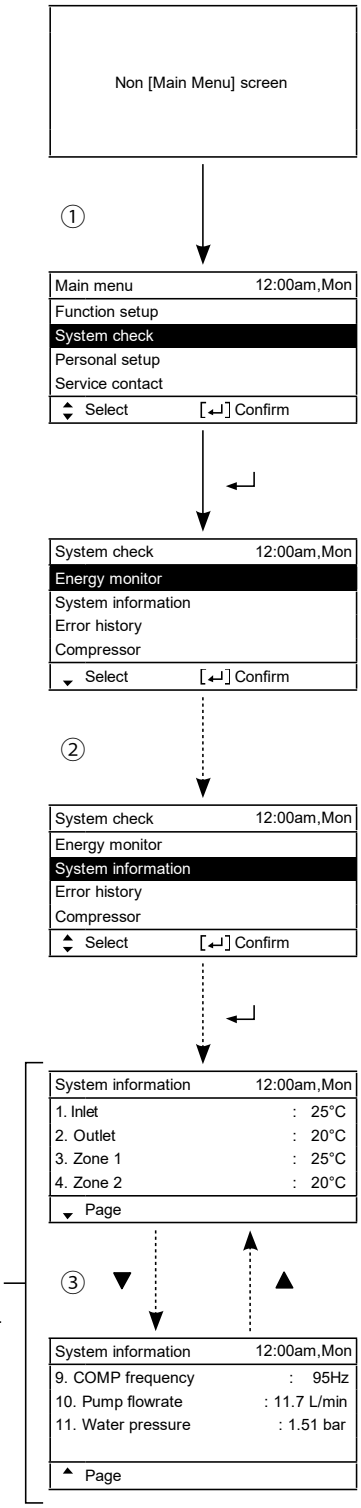

### 17.1.5 Specifications

#### *17.1.5.1 Specifications of fresh water was heat transfer medium in brazed heat exchanger*

| Parameter | Quality Limits for Tap Water on the Secondary Side |
|---|---|
| Temperature | Below 60°C |
| pH | 7 to 9 |
| Alkalinity | 60mg/l <$HCO_3$ <300mg/l |
| Conductivity | < 500µS/cm |
| Hardness | [$Ca^+$, $Mg^+$] / [$HCO_3^-$] > 0.5 |
| Chloride | < 200mg/l at 60°C |
| Sulphate | [$SO_4^{2-}$] > 100mg/l and [$HCO_3^-$] / [$SO_4^{2-}$] > 1 |
| Nitrate | $NO_3$ < 100mg/l |
| Chlorine | < 0.5mg/l |

#### *17.1.5.2 External filter*

Solids in the water must be filtered.
Minimum filter mesh size required for the field supply external filter in the water inlet is 20 mesh.

# 18. Troubleshooting Guide

## *18.1 Refrigeration Cycle System*

In order to diagnose malfunctions, make sure that there are no electrical problems before inspecting the refrigeration cycle.
Such problems include insufficient insulation, problem with the power source, malfunction of a compressor and a fan.

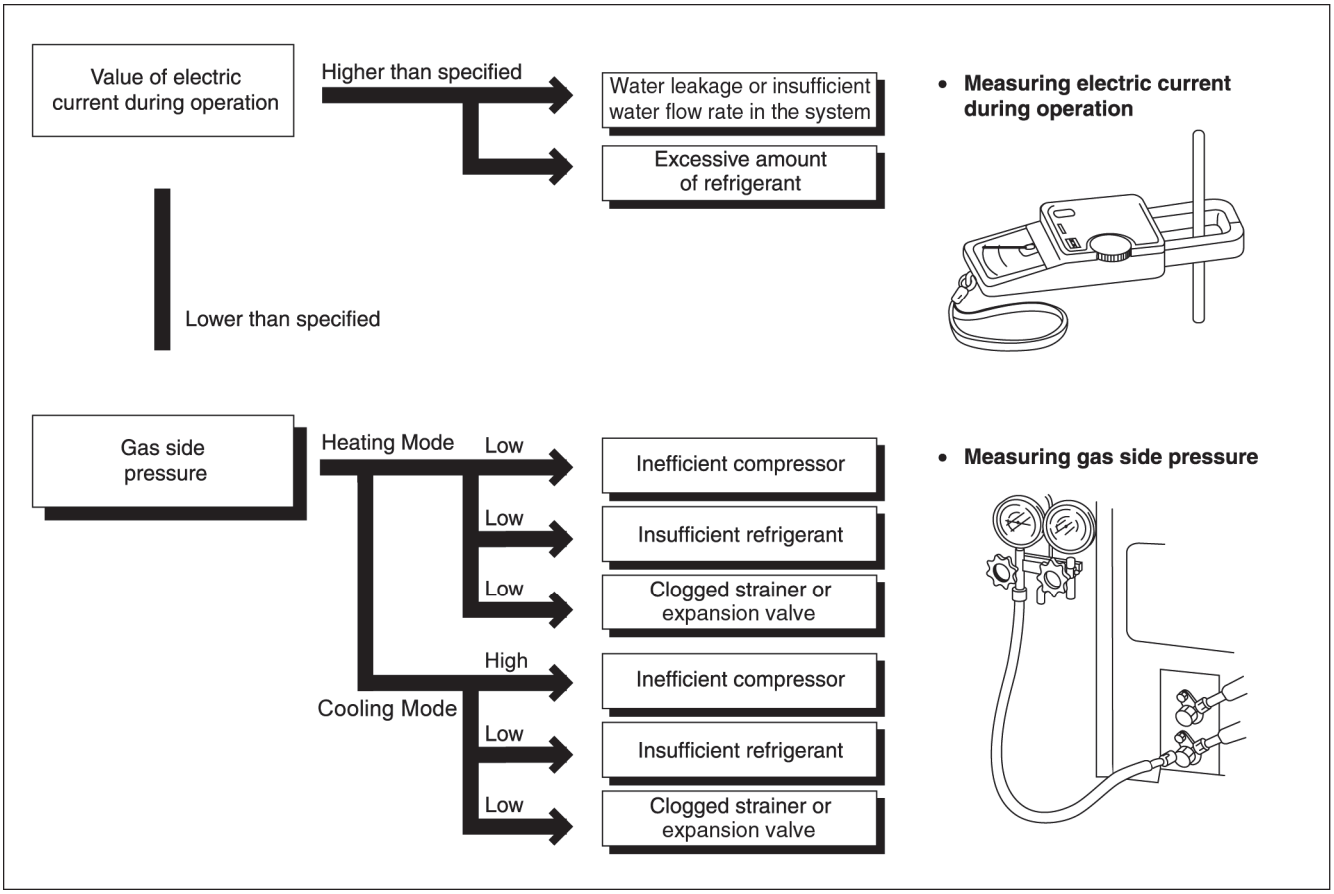

## 18.2 Relationship between the Condition of the Air-to-Water Heatpump Indoor and Outdoor Units and Pressure and Electric Current

| Condition of the Air-to-Water Heatpump indoor and outdoor units | Heating Mode | | | Cooling Mode | | |
|---|---|---|---|---|---|---|
| | Low Pressure | High Pressure | Electric current during operation | Low Pressure | High Pressure | Electric current during operation |
| Water leakage or insufficient water flow rate in the system | ↗ | ↗ | ↗ | ↘ | ↘ | ↘ |
| Excessive amount of refrigerant | ↗ | ↗ | ↗ | ↘ | ↘ | ↘ |
| Inefficient compression | ↗ | ↘ | ↘ | ↗ | ↘ | ↘ |
| Insufficient refrigerant (gas leakage) | ↘ | ↘ | ↘ | ↘ | ↘ | ↘ |
| Outdoor heat exchange deficiency | ↘ | ↘ | ↘ | ↗ | ↗ | ↗ |
| Clogged expansion valve or Strainer | ↘ | ↗ | ↗ | ↗ | ↘ | ↘ |

- Carry out the measurements of pressure, electric current, and temperature fifteen minutes after an operation is started.

## 18.3 Breakdown Self Diagnosis Function

### 18.3.1 Self Diagnosis Function (Three Digits Alphanumeric Code)

- When abnormality occur during operation, the system will stop operation, and OFF/ON control panel LED will blink and error code will display on the control panel.
- Even error code is reset by turning OFF power supply or by selecting ERROR RESET, if the system abnormality is still unrepaired, system will again stop operation, and OFF/ON control panel LED will again blinks and error code will be display.
- The error code will store in IC memory.

- **To check the error code**
  1 When an abnormality occurs, system will stop operation and OFF/ON control panel LED will blink.
  2 Error code of the abnormality will be display on the control panel.
  3 To determine the abnormality description, the error code table needs to be referred.

eg:

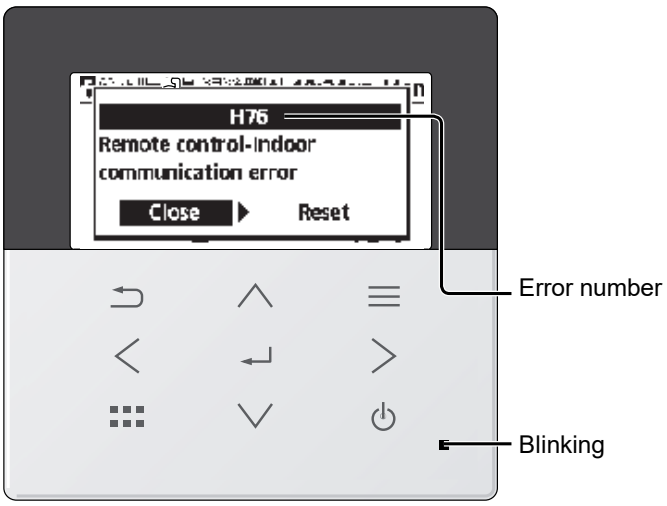


Press < > to select Close / Reset then press ↵

- **To display past/last error code**
  1 Turn ON power supply.
  2 Refer below procedure to retrieve the error code history.

- **To permanently delete error code from IC memory**
  1 Turn ON power supply.
  2 Refer below procedure to clear error history.

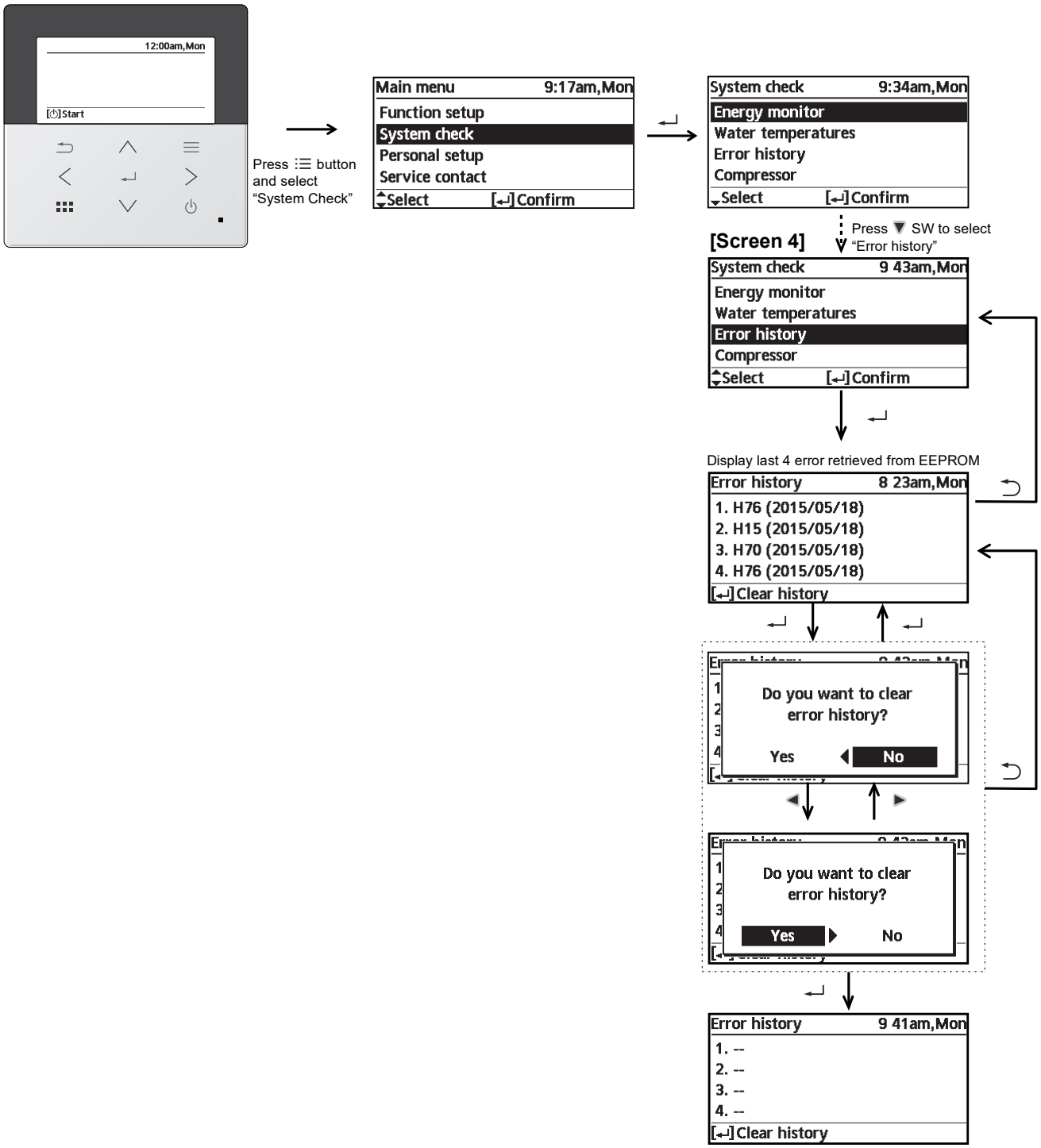
12:00am,Mon
Start
Press button and select "System Check"
Main menu 9:17am,Mon
Function setup
System check
Personal setup
Service contact
Select
Confirm
System check 9:34am,Mon
Energy monitor
Water temperatures
Error history
Compressor
Select
Confirm
Press SW to select "Error history"
[Screen 4]
System check 9 43am,Mon
Energy monitor
Water temperatures
Error history
Compressor
Select
Confirm
Display last 4 error retrieved from EEPROM
Error history 8 23am,Mon
1. H76 (2015/05/18)
2. H15 (2015/05/18)
3. H70 (2015/05/18)
4. H76 (2015/05/18)
Clear history
Do you want to clear error history?
Yes
No
Do you want to clear error history?
Yes
No
Error history 9 41am,Mon
1. --
2. --
3. --
4. --
Clear history

## 18.4 Error Codes Table

| Diagnosis display | Abnormality/Protection control | Abnormality judgement | Primary location to verify |
|---|---|---|---|
| H00 | No abnormality detected | — | — |
| H12 | Indoor/Outdoor capacity unmatched | 90s after power supply | • Indoor/outdoor connection wire<br>• Indoor/outdoor PCB<br>• Specification and combination table in catalogue |
| H15 | Outdoor compressor temperature sensor abnormality | Continue for 5 sec. | • Compressor temperature sensor (defective or disconnected) |
| H20 | Water pump abnormality | Continue for 10 sec. | • Indoor PCB<br>• Water pump (malfunction) |
| H21 | Abnormal water pressure | Continue for 300 sec. | • Water pressure sensor |
| *H22 | Abnormal tank 2 sensor | Continue for 5 sec. | • Tank 2 sensor |
| H23 | Indoor refrigerant liquid temperature sensor abnormality | Continue for 5 sec. | • Refrigerant liquid temperature sensor (defective or disconnected) |
| H27 | Service valve error | Continue for 5 minutes | • High pressure sensor (defective or disconnected) |
| H28 | Abnormal solar sensor | Continue for 5 sec. | • Solar temperature sensor (defective or disconnected) |
| H31 | Abnormal swimming pool sensor | Continue for 5 sec. | • Pool temperature sensor (defective or disconnected) |
| H36 | Abnormal buffer tank sensor | Continue for 5 sec. | • Buffer tank sensor (defective or disconnected) |
| H38 | Brand code not match | When indoor and outdoor brand code not same | — |
| H42 | Compressor low pressure abnormality | — | • Outdoor pipe temperature sensor<br>• Clogged expansion valve or strainer<br>• Insufficient refrigerant<br>• Outdoor PCB<br>• Compressor |
| H43 | Abnormal Zone 1 sensor | Continue for 5 sec. | • Water temperature Zone 1 sensor |
| H44 | Abnormal Zone 2 sensor | Continue for 5 sec. | • Water temperature Zone 2 sensor |
| H62 | Water flow switch abnormality | Continue for 1 min. | • Water flow switch |
| H63 | Abnormal low pressure sensor | 4 times in 20 minutes | • Low pressure sensor (defective or disconnect) |
| H64 | Refrigerant high pressure abnormality | Continue for 5 sec. | • Outdoor high pressure sensor (defective or disconnected) |
| *H65 | Abnormal deice water circulation | Water flow > 7 l/min continuously for 20 seconds during anti freeze deice | • Water pump |
| H67 | Abnormal External Thermistor 1 | Continue for 5 sec. | • Room temperature Zone 1 sensor |
| H68 | Abnormal External Thermistor 2 | Continue for 5 sec. | • Room temperature Zone 2 sensor |
| H70 | Back-up heater OLP abnormality | Continue for 60 sec. | • Back-up heater OLP (Disconnection or activated) |
| H72 | Abnormal tank 1 sensor | Continue for 5 sec. | • Tank 1 sensor |
| H74 | PCB communication error | Communication or transfer error | • Indoor main PCB and Sub PCB |
| H75 | Low water temperature control | Room heater disable and deice request to operate under low water temperature | • Heater operation must enable to increase water temperature |
| H76 | Communication error (RC-1 & Indoor or RC-1 & RC-2) | — | • Indoor - control panel (defective or disconnected)<br>control panel 1 - control panel 2 (defective or disconnected) |
| H90 | Indoor/outdoor abnormal communication | > 1 min after starting operation | • Internal/external cable connections<br>• Indoor/Outdoor PCB |
| H91 | Tank heater OLP abnormality | Continue for 60 sec. | • Tank heater OLP (Disconnection or activated) |

| Diagnosis display | Abnormality/Protection control | Abnormality judgement | Primary location to verify |
|---|---|---|---|
| H95 | Indoor/Outdoor wrong connection | — | • Indoor/Outdoor supply voltage |
| H98 / F95 | Outdoor high pressure overload protection<br>Cooling high pressure overload protection | — | • Outdoor high pressure sensor<br>• Water pump or water leakage<br>• Clogged expansion valve or strainer<br>• Excess refrigerant<br>• Outdoor PCB |
| H99 | Indoor heat exchanger freeze prevention | — | • Indoor heat exchanger<br>• Refrigerant shortage |
| F12 | Pressure switch activate | 4 times occurrence within 30 minutes | • Pressure switch |
| F14 | Outdoor compressor abnormal revolution | 4 times occurrence within 20 minutes | • Outdoor compressor |
| F15 | Outdoor fan motor lock abnormality | 2 times occurrence within 30 minutes | • Outdoor PCB<br>• Outdoor fan motor |
| F16 | Total running current protection | 3 times occurrence within 20 minutes | • Excess refrigerant<br>• Outdoor PCB |
| F20 | Outdoor compressor overheating protection | 4 times occurrence within 30 minutes | • Compressor tank temperature sensor<br>• Clogged expansion valve or strainer<br>• Insufficient refrigerant<br>• Outdoor PCB<br>• Compressor |
| F22 | IPM (power transistor) overheating protection | 3 times occurrence within 30 minutes | • Improper heat exchange<br>• IPM (Power transistor) |
| F23 | Outdoor Direct Current (DC) peak detection | 7 times occurrence continuously | • Outdoor PCB<br>• Compressor |
| F24 | Refrigeration cycle abnormality | 2 times occurrence within 30 minutes | • Insufficient refrigerant<br>• Outdoor PCB<br>• Compressor low compression |
| F25 | Cooling/Heating cycle changeover abnormality | 4 times occurrence within 30 minutes | • 4-way valve<br>• V-coil |
| F27 | Pressure switch abnormality | Continue for 1 min. | • Pressure switch |
| F30 | Water outlet sensor 2 abnormality | Continue for 5 sec. | • Water outlet sensor 2 (defective or disconnected) |
| F32 | Internal thermostat error (RC-1 or RC-2) | Continue for 5 sec. | • Control panel PCB thermostat |
| F35<br>(No Self-diagnosis Method) | External meter communication error | Continue for 180 sec. | • External meter |
| F36 | Outdoor air temperature sensor abnormality | Continue for 5 sec. | • Outdoor air temperature sensor (defective or disconnected) |
| F37 | Indoor water inlet temperature sensor abnormality | Continue for 5 sec. | • Water inlet temperature sensor (defective or disconnected) |
| F40 | Outdoor discharge pipe temperature sensor abnormality | Continue for 5 sec. | • Outdoor discharge pipe temperature sensor (defective or disconnected) |
| F41 | PFC control | 4 times occurrence within 10 minutes | • Voltage at PFC |
| F42 | Outdoor heat exchanger temperature sensor abnormality | Continue for 5 sec. | • Outdoor heat exchanger temperature sensor (defective or disconnected) |
| F43 | Outdoor defrost sensor abnormality | Continue for 5 sec. | • Outdoor defrost sensor (defective or disconnected) |
| F45 | Indoor water outlet temperature sensor abnormality | Continue for 5 sec. | • Water outlet temperature sensor (defective or disconnected) |
| F46 | Outdoor Current Transformer open circuit | — | • Insufficient refrigerant<br>• Outdoor PCB<br>• Compressor low |
| F48 | Outdoor EVA outlet temperature sensor abnormality | Continue for 5 sec. | • Outdoor EVA outlet temperature sensor (defective or disconnected) |
| F49 | Outdoor bypass outlet temperature sensor abnormality | Continue for 5 sec. | • Outdoor bypass outlet temperature sensor (defective or disconnected) |
| F50 | Water inlet 2 sensor error | Continue for 5 sec. | • Water inlet 2 sensor |
| F53 | Main expansion valve overcurrent protection | 4 times occurrence within 40 minutes | • Main expansion valve |

**Note:** * This error code is not applicable for this system.

## *18.5 Self-diagnosis Method*

### 18.5.1 Connection Capability Rank Abnormality (H12)

**Malfunction Decision Conditions:**

During startup operation of cooling and heating, the capability rank of indoor checked by the outdoor is used to determine connection capability rank abnormality.

**Malfunction Caused:**

1 Wrong model interconnected.
2 Wrong indoor unit or outdoor unit PCB (main) used.
3 Faulty indoor unit or outdoor unit PCB (main).

**Abnormality Judgment:**

Continue for 90 seconds.

# Troubleshooting:

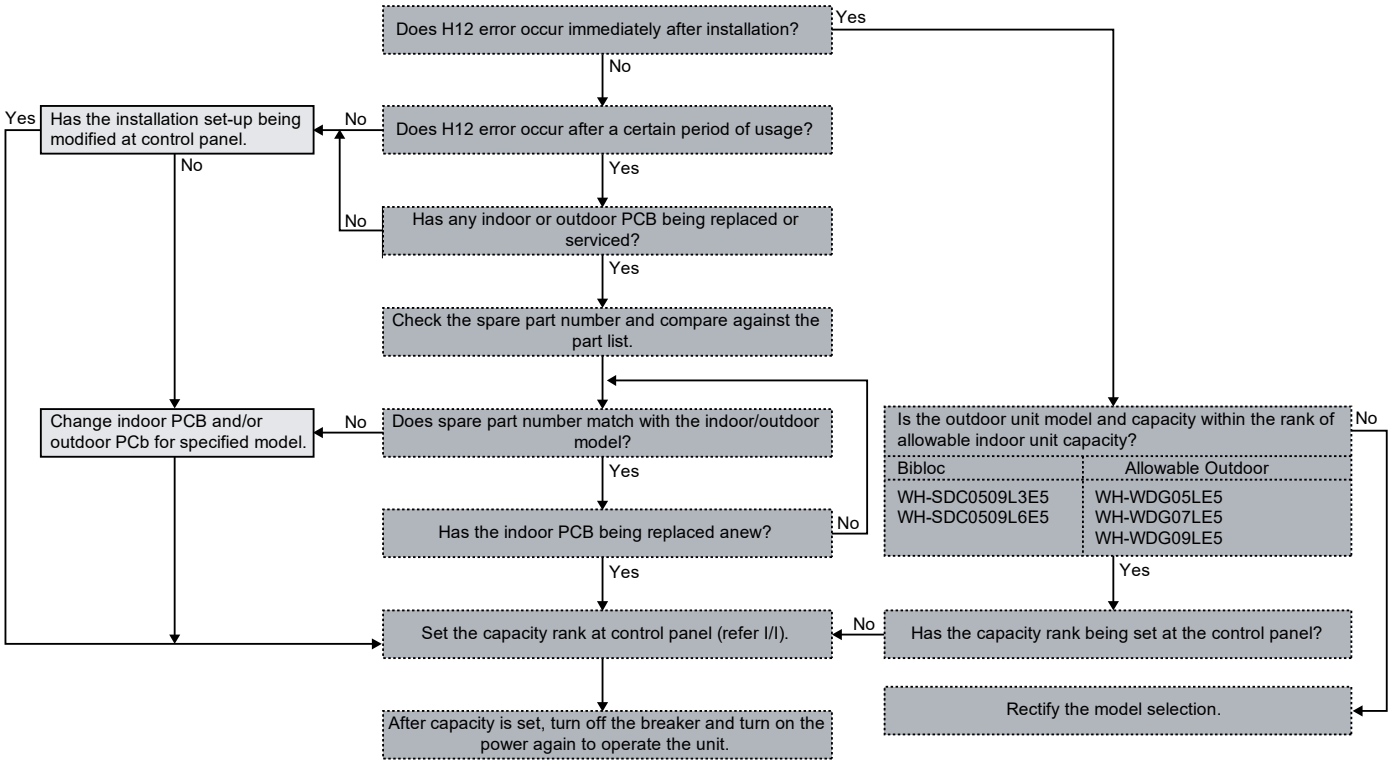

## 18.5.2 Compressor Tank Temperature Sensor Abnormality (H15)

**Malfunction Decision Conditions:**

During startup and operation of cooling and heating, the temperatures detected by the compressor tank temperature sensor are used to determine sensor error.

**Malfunction Caused:**

1 Faulty connector connection.
2 Faulty sensor.
3 Faulty outdoor unit PCB (main).

**Abnormality Judgment:**

Continue for 5 seconds.

### Troubleshooting:

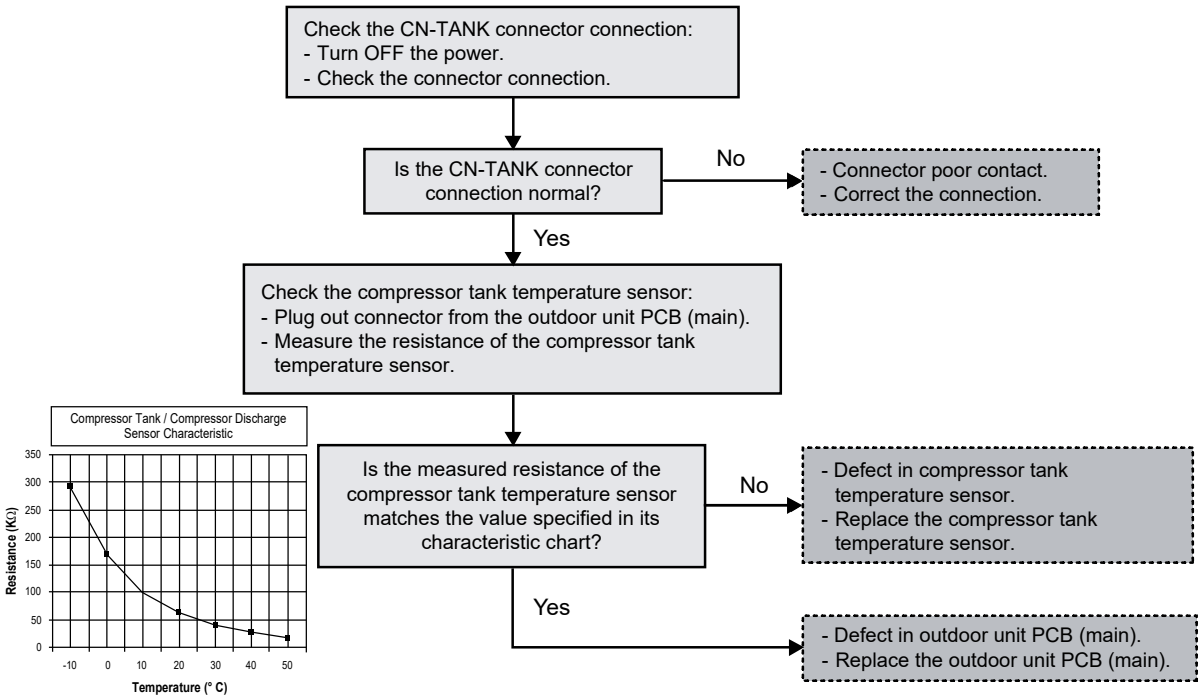

### 18.5.3 Water Pump Abnormality (H20)

**Malfunction Decision Conditions:**

During startup and operation of cooling and heating, the rotation speed detected by the IPM of water pump motor during water pump operation is used to determine abnormal water pump (feedback of rotation > 6,000rpm or < 700rpm).

**Malfunction Caused:**

1 Operation stop due to short circuit inside the water pump motor winding.
2 Operation stop due to breaking of wire inside the water pump motor.
3 Operation stop due to breaking of water pump lead wires.
4 Operation stop due to water pump motor IPM malfunction.
5 Operation error due to faulty indoor unit PCB.

**Abnormality Judgment:**

Continue for 5 seconds.

## Troubleshooting:

**Caution** For safety reason and to prevent component breakdown, always switch off the power before remove and connect the component.

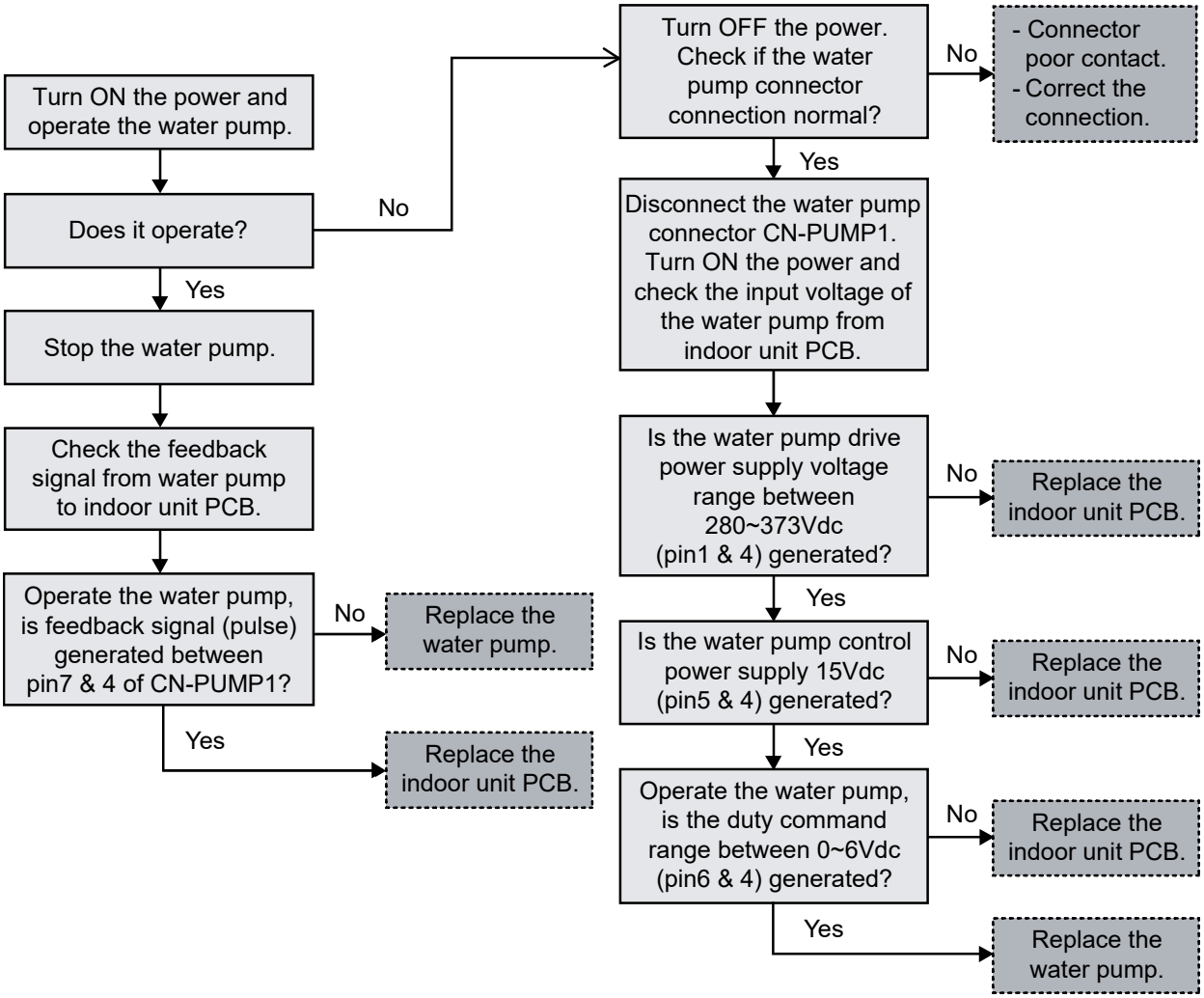

## 18.5.4 Water Pressure Sensor Abnormality (H21)

**Malfunction Decision Conditions:**

During operation of cooling and heating, the water pressure detected by the indoor water pressure sensor is used to determine water pressure error.

**Malfunction Caused:**

1 Faulty water pump.
2 Water leak in system.
3 Faulty connector connection.
4 Faulty water pressure sensor.
5 Faulty indoor unit PCB (main).

**Abnormality Judgment:**

Continue for 180 seconds (but no judgment for 70 seconds after Water pump startup/restart).

**Troubleshooting:** **Caution** For safety reason and to prevent component breakdown, always switch off the power before remove and connect the component.

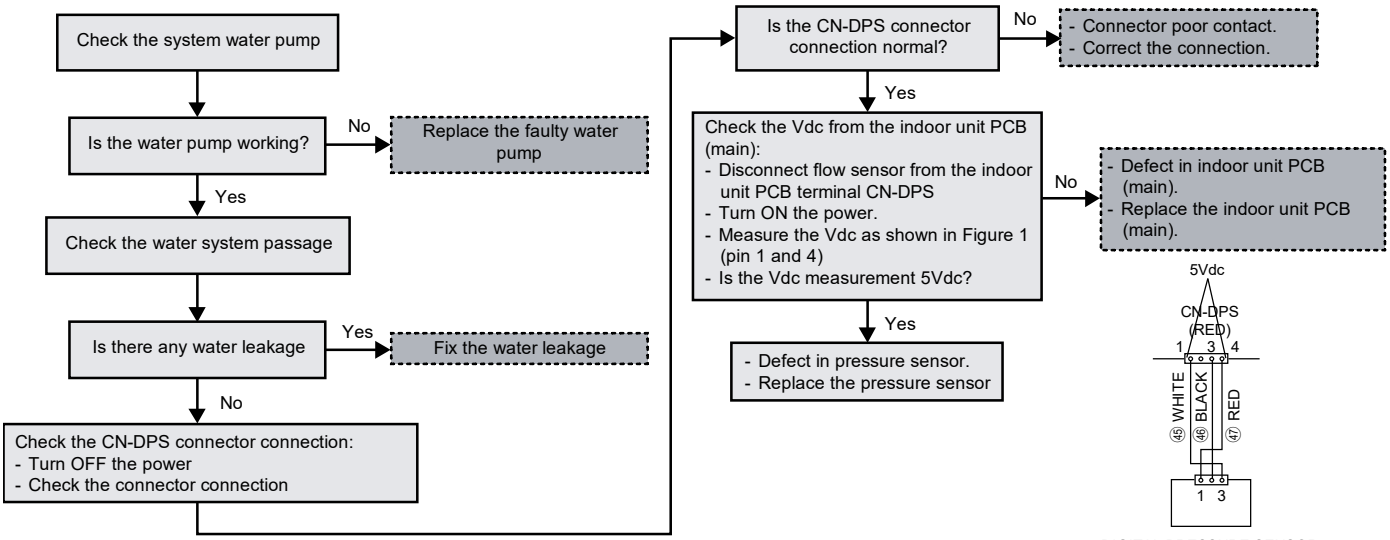


DIGITAL PRESSURE SENSOR
Figure 1

## 18.5.5 Tank 2 Temperature Sensor Abnormality (H22)

**Malfunction Decision Conditions:**

When tank connection is set to ON, the temperatures detected by the tank temperature sensor are used to determine sensor error.

**Malfunction Caused:**

1 Faulty connector connection.
2 Faulty sensor.
3 Faulty indoor unit PCB (main).

**Abnormality Judgment:**

Continue for 5 seconds.

**Troubleshooting:** Caution

For safety reason and to prevent component breakdown, always switch off the power before remove and connect the component.

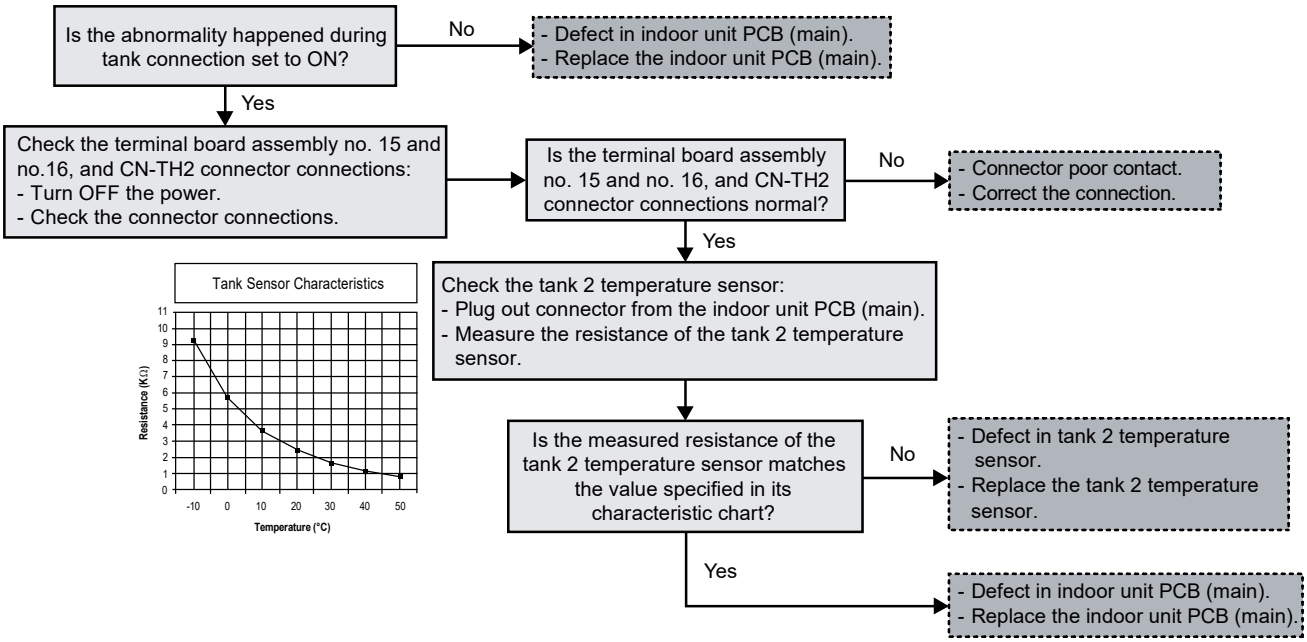

## 18.5.6 Outdoor Refrigerant Liquid Temperature Sensor Abnormality (H23)

**Malfunction Decision Conditions:**

During startup and operation of cooling and heating, the temperatures detected by the outdoor refrigerant liquid temperature sensor are used to determine sensor error.

**Malfunction Caused:**

1 Faulty connector connection.
2 Faulty sensor.
3 Faulty indoor unit PCB (main).

**Abnormality Judgment:**

Continue for 5 seconds.

**Troubleshooting:** Caution

For safety reason and to prevent component breakdown, always switch off the power before remove and connect the component.

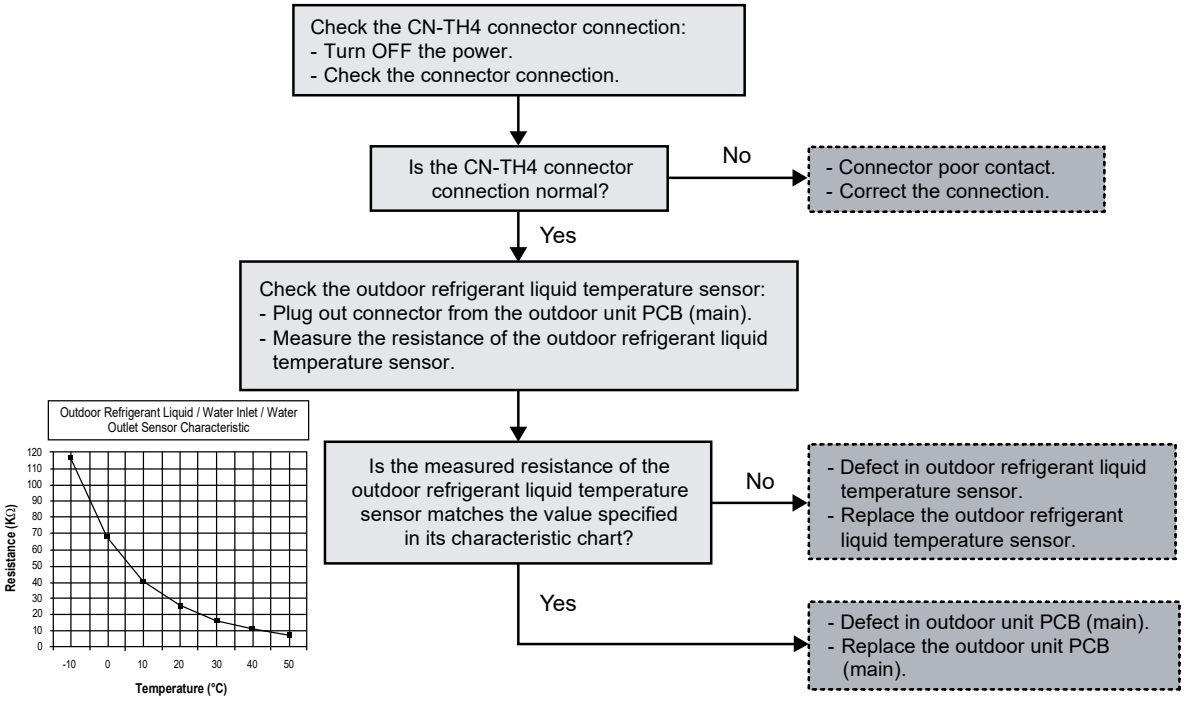

### 18.5.7 Service Valve Error (H27)

**Malfunction Decision Conditions:**

During cooling operation, when:-

[a] Indoor refrigerant pipe temperature at compressor startup - present indoor refrigerant pipe temperature < 2°C

[b] Present high pressure - high pressure at compressor startup < 5kg/cm$^2$

**Judgment only for first time cooling operation and not during pump down operation.

**Malfunction Caused:**

1 3 way valves closed.
2 Faulty high pressure sensor.
3 Faulty indoor refrigerant pipe temperature sensor
4 Faulty outdoor unit PCB (main).

**Abnormality Judgment:**

Continue for 5 minutes.

**Troubleshooting:** Caution

For safety reason and to prevent component breakdown, always switch off the power before remove and connect the component.

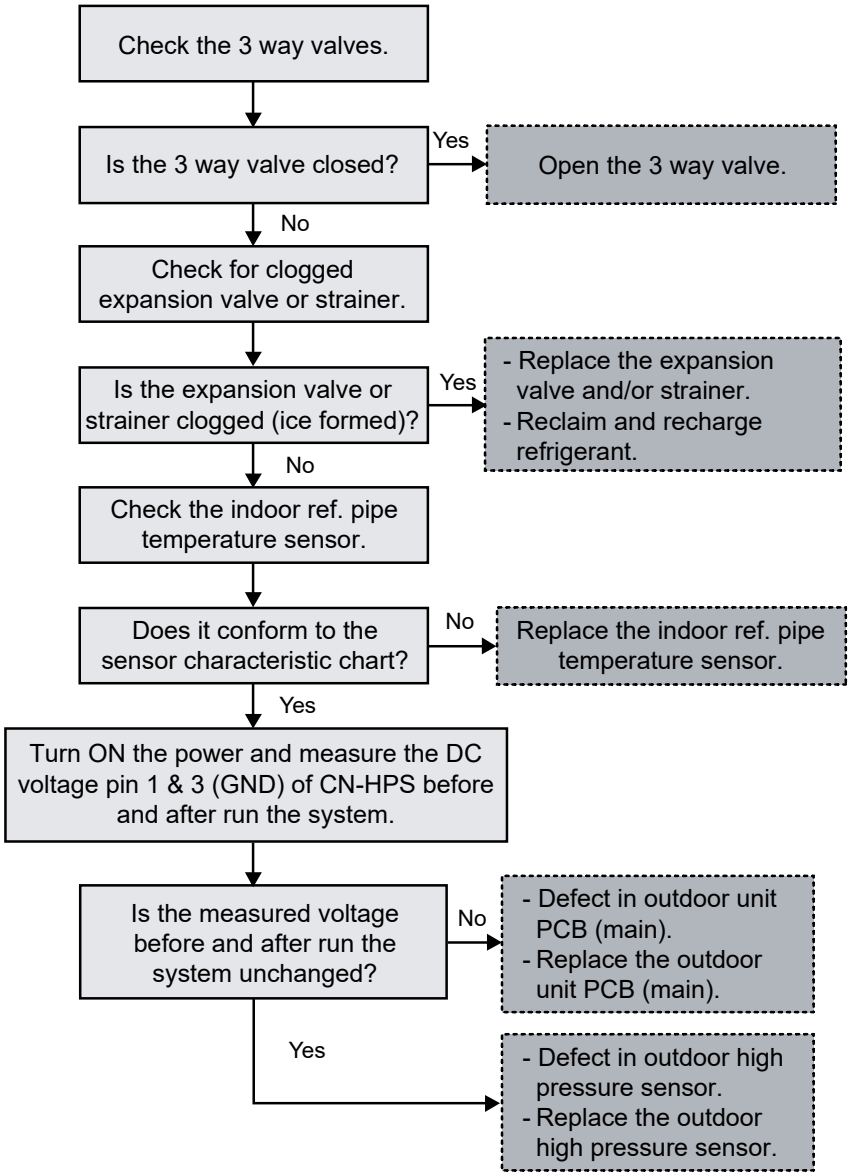

## 18.5.8 Abnormal Solar Sensor (H28)

**Malfunction Caused:**

1 Faulty connector connection.
2 Faulty solar sensor.
3 Faulty indoor sub PCB.

**Abnormality Judgment:**

Continue for 5 seconds.

### 18.5.9 Abnormal Swimming Pool Sensor (H31)

**Malfunction Caused:**

1 Faulty connector connection.
2 Faulty swimming pool sensor.
3 Faulty indoor sub PCB.

**Abnormality Judgment:**

Continue for 5 seconds.

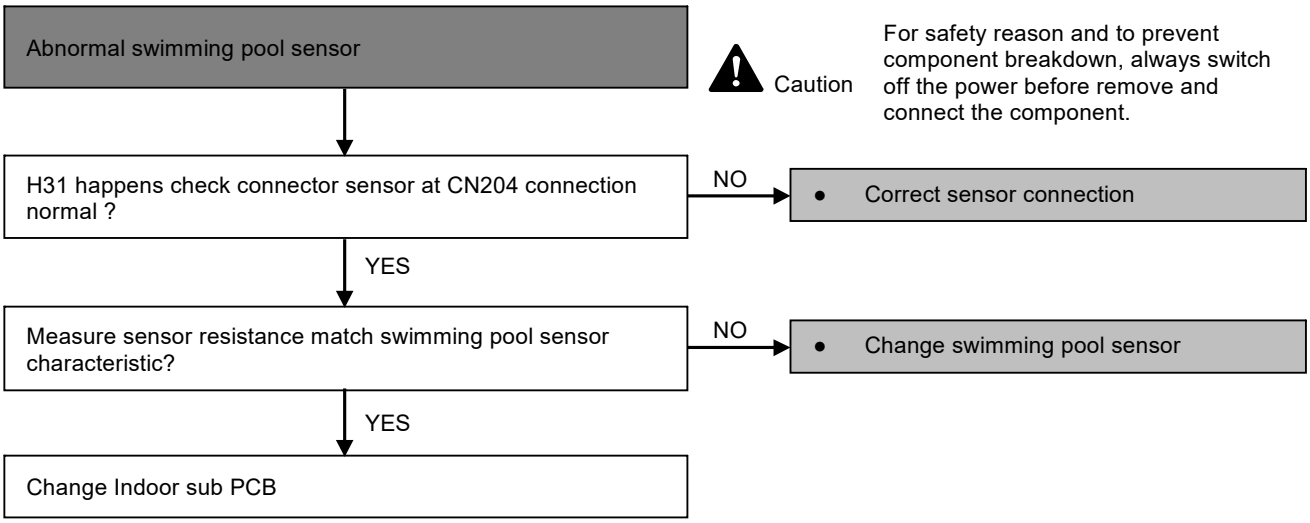

## 18.5.10 Abnormal Buffer Tank Sensor (H36)

**Malfunction Caused:**

1 Faulty connector connection.
2 Faulty buffer tank sensor.
3 Faulty indoor sub PCB.

**Abnormality Judgment:**

Continue for 5 seconds.

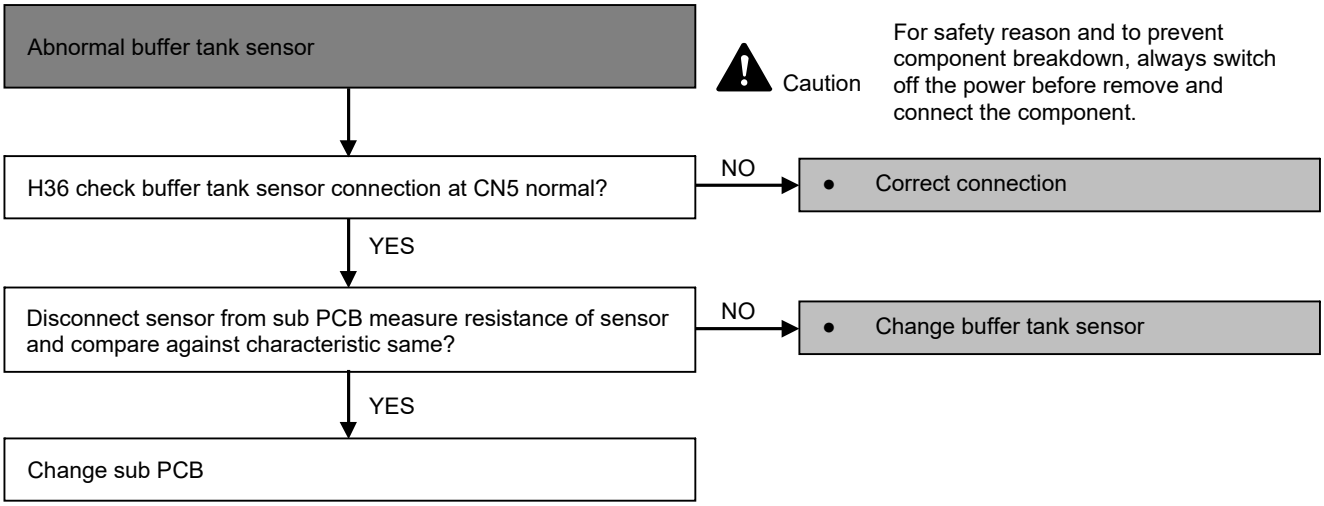

## 18.5.11 Brand Code Not Matching (H38)

**Malfunction Caused:**

1 Indoor and outdoor brand code not match.

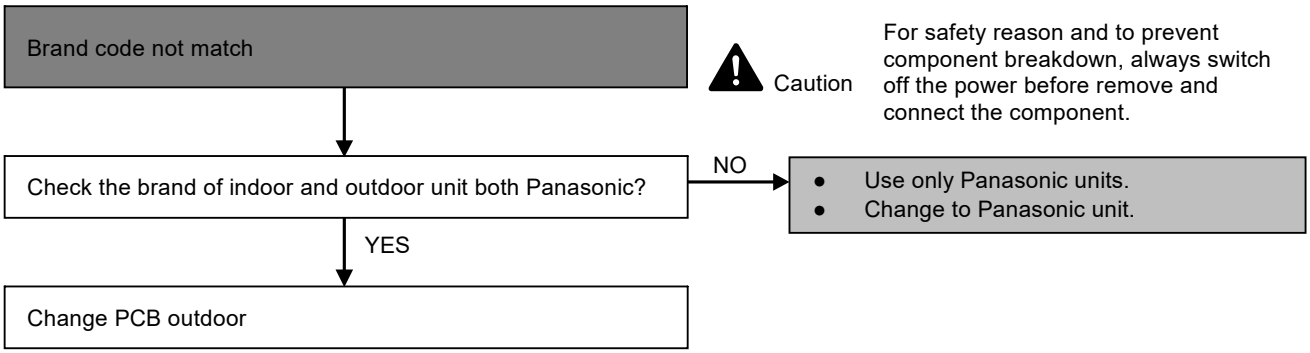

## 18.5.12 Compressor Low Pressure Protection (H42)

**Malfunction Decision Conditions:**

During operation of heating and after 5 minutes compressor ON, when outdoor pipe temperature below -29°C or above 26°C is detected by the outdoor pipe temperature sensor.

**Malfunction Caused:**

1 Dust accumulation on the outdoor unit heat exchanger.
2 Air short circuit at outdoor unit.
3 2 way valve partially closed.
4 Faulty outdoor unit fan motor.
5 Refrigerant shortage (refrigerant leakage).
6 Clogged expansion valve or strainer.
7 Faulty outdoor pipe temperature sensor.
8 Faulty outdoor unit main PCB (main).

**Troubleshooting:** Caution

For safety reason and to prevent component breakdown, always switch off the power before remove and connect the component.

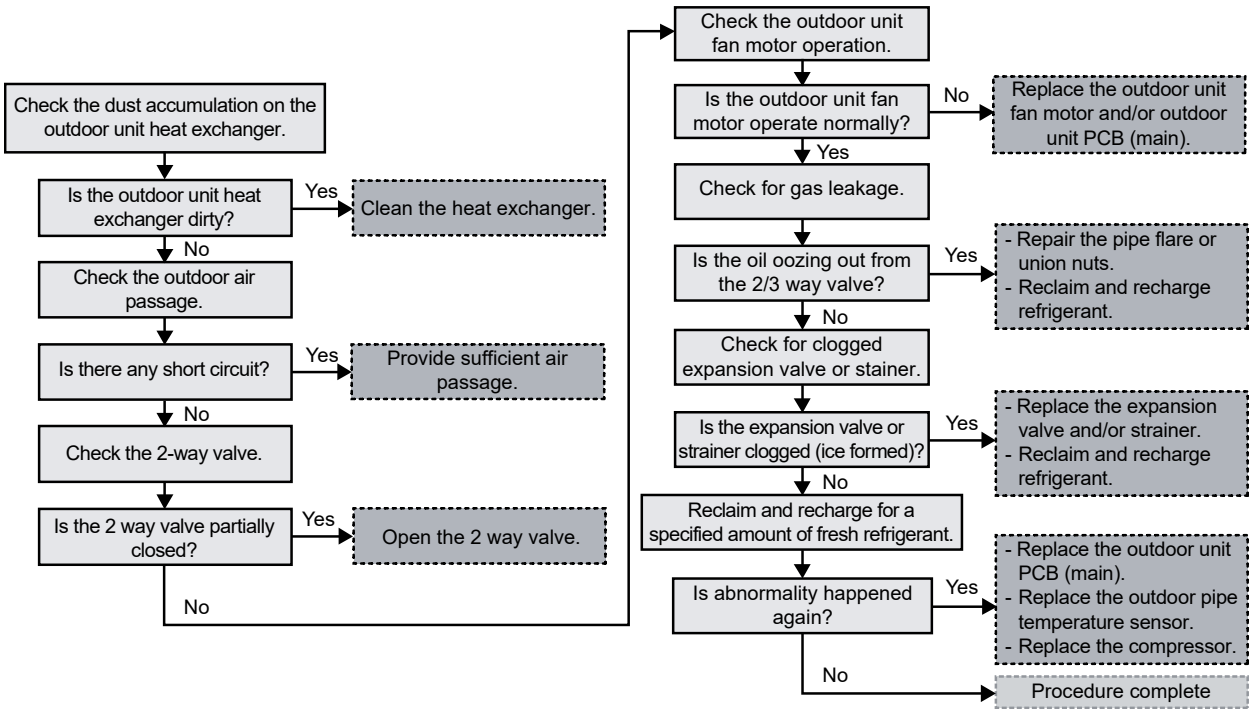

## 18.5.13 Abnormal Zone 1 Sensor (H43)

**Malfunction Caused:**

1 Faulty connector connection.
2 Faulty buffer tank sensor.
3 Faulty indoor sub PCB.

**Abnormality Judgment:**

Continue for 5 seconds.

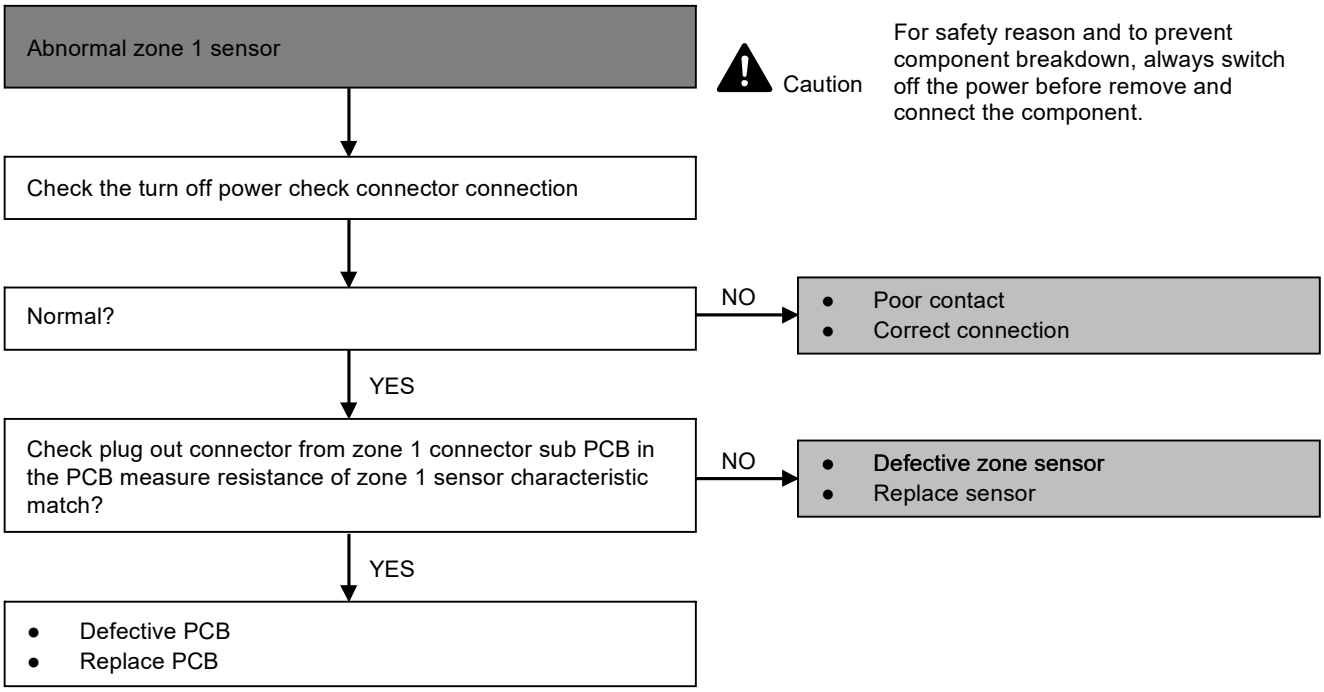

## 18.5.14 Abnormal Zone 2 Sensor (H44)

**Malfunction Caused:**

1 Faulty connector connection.
2 Faulty buffer tank sensor.
3 Faulty indoor sub PCB.

**Abnormality Judgment:**

Continue for 5 seconds.

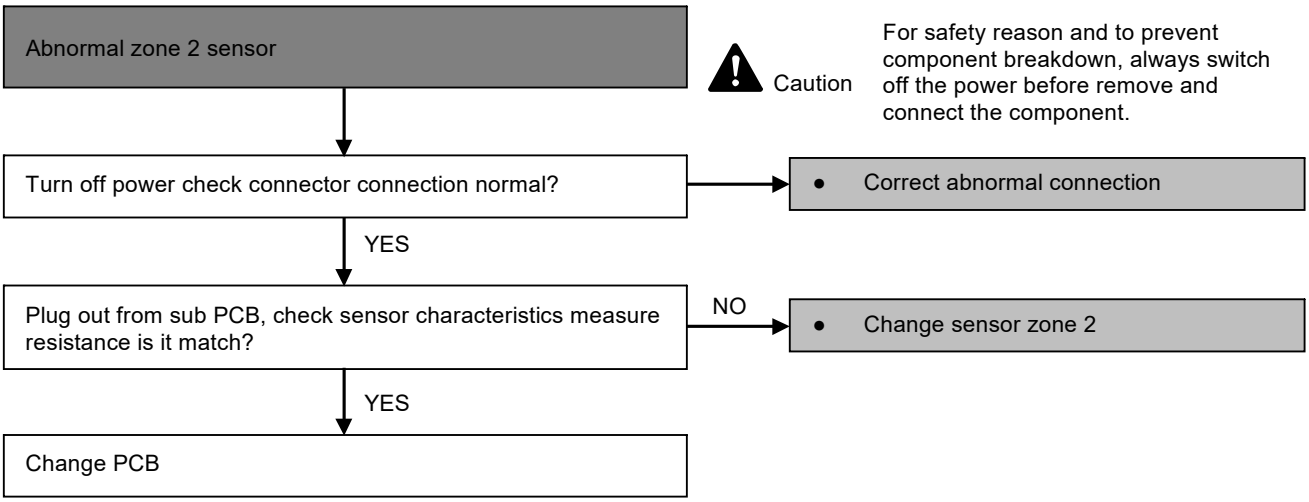

## 18.5.15 Water Flow Switch Abnormality (H62)

**Malfunction Decision Conditions:**

During operation of cooling and heating, the water flow detected by the indoor water flow switch is used to determine water flow error.

**Malfunction Caused:**

1 Faulty water pump.
2 Water leak in system.
3 Faulty connector connection.
4 Faulty water flow switch.
5 Faulty indoor unit PCB (main).

**Abnormality Judgment:**

Continue for 10 seconds (but no judgment for 9 minutes after compressor startup/restart).

**Troubleshooting:** **Caution** For safety reason and to prevent component breakdown, always switch off the power before remove and connect the component.

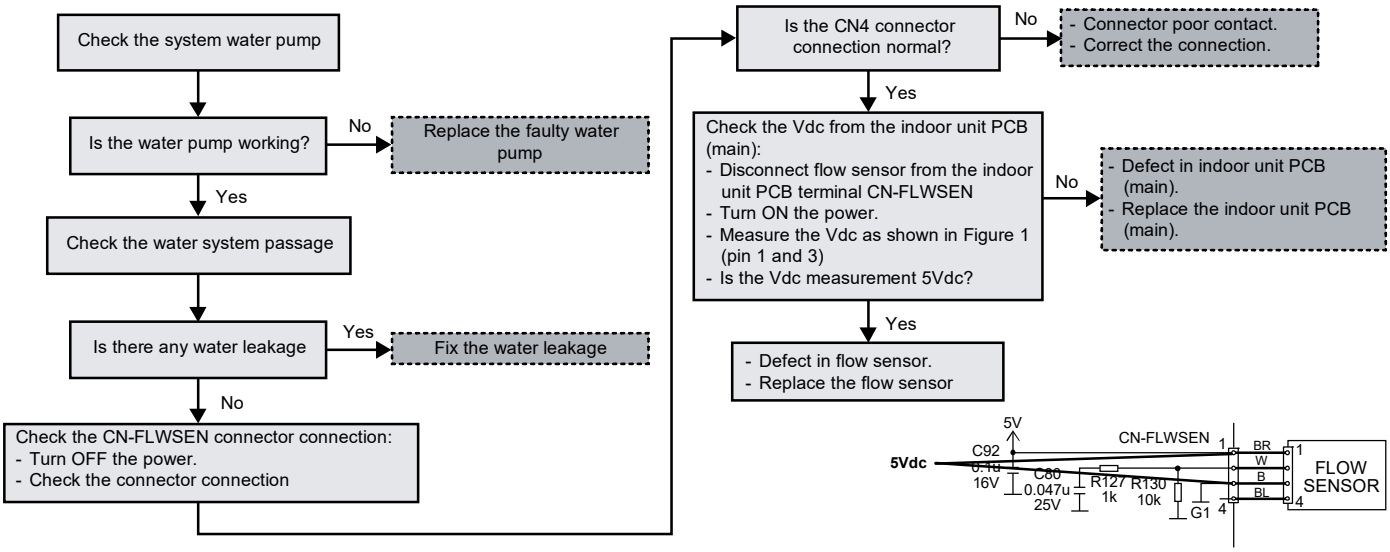


Figure 1

## 18.5.16 Outdoor High Pressure Abnormality (H64)

**Malfunction Decision Conditions:**

During operation of cooling and heating, when the outdoor high pressure sensor output signal is 0 Vdc or 5 Vdc.

**Malfunction Caused:**

1 Faulty connector connection.
2 Faulty sensor.
3 Faulty outdoor unit PCB (main).

**Abnormality Judgment:**

Continue 4 times in 20 minutes.

**Troubleshooting:** Caution

For safety reason and to prevent component breakdown, always switch off the power before remove and connect the component.

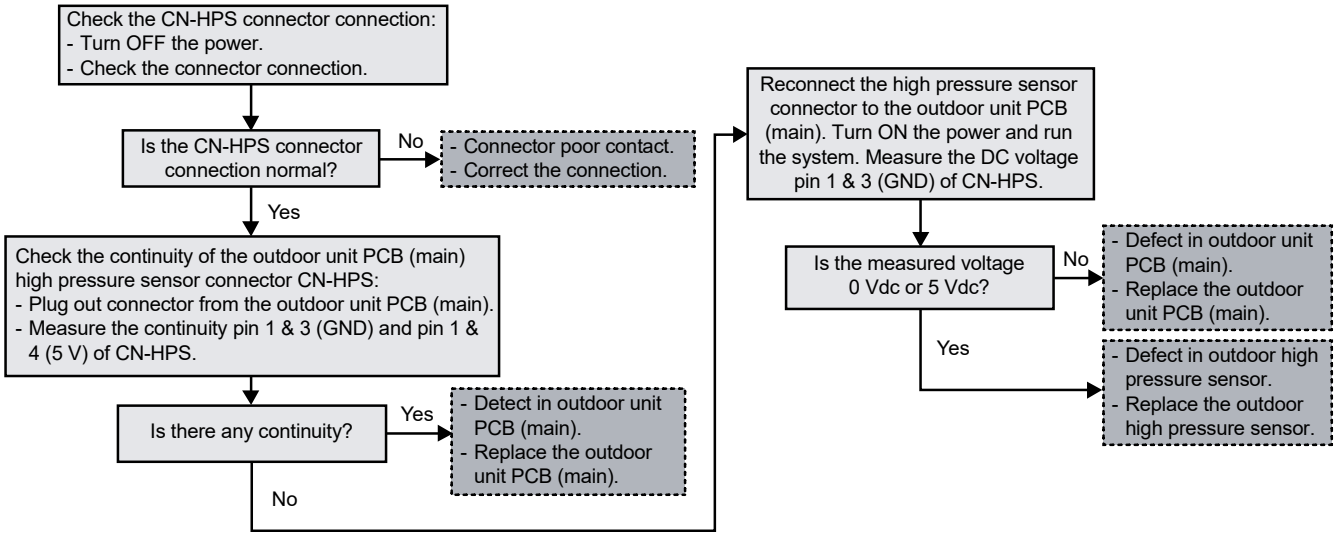

## 18.5.17 Deice Circulation Error (H65)

**Malfunction Decision Conditions:**

During startup and operation of deice (mode 2), the water flow (> 10l/min) detected by the water flow switch is used to determine deice circulation error.

**Malfunction Caused:**

1 Water flow in air-to-water heatpump indoor unit circuitry.
2 Faulty indoor unit water flow switch.
3 Faulty indoor unit water pump.
4 Faulty indoor unit PCB.

**Abnormality Judgment:**

Continue for 10 seconds.

### Troubleshooting:

**Caution** For safety reason and to prevent component breakdown, always switch off the power before remove and connect the component.

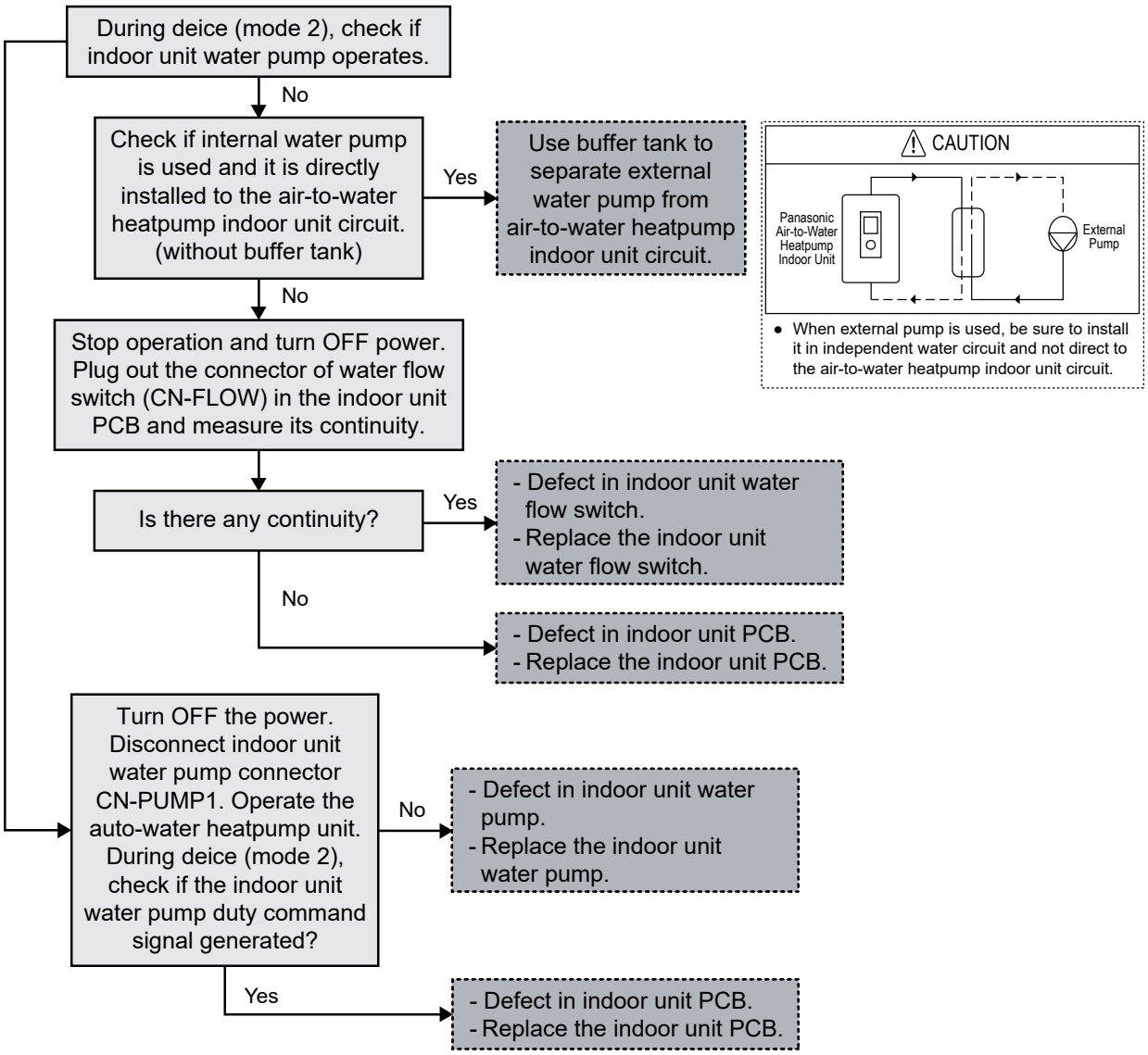

## 18.5.18 Abnormal External Thermistor 1 (H67)

**Malfunction Caused:**

1 Faulty connector connection.
2 Faulty room temperature zone 1 sensor.
3 Faulty indoor sub PCB.

**Abnormality Judgment:**

Continue for 5 seconds.

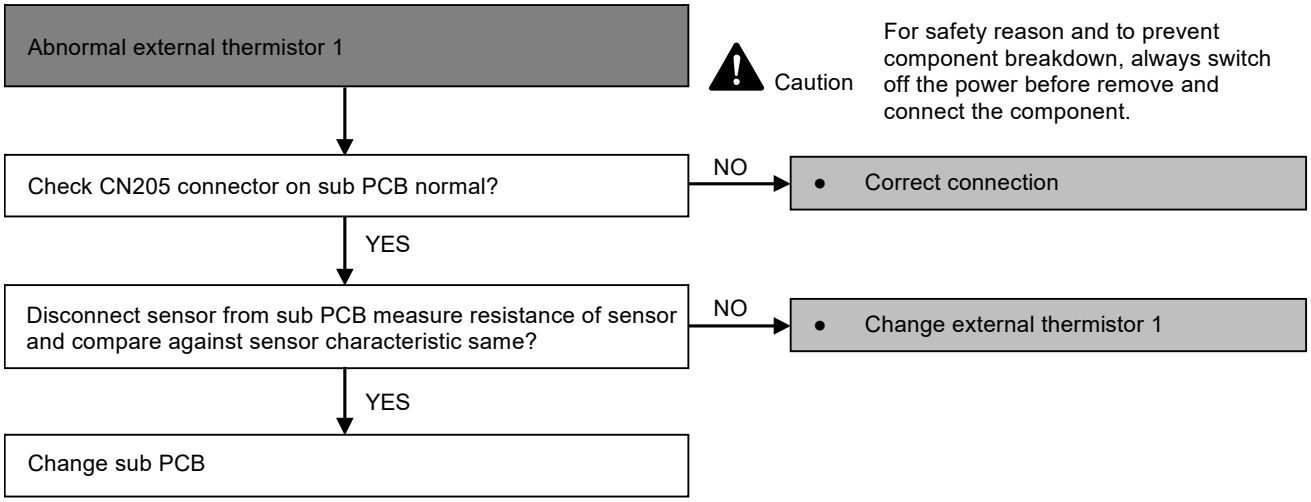

## 18.5.19 Abnormal External Thermistor 2 (H68)

**Malfunction Caused:**

1 Faulty connector connection.
2 Faulty room temperature zone 2 sensor.
3 Faulty indoor sub PCB.

**Abnormality Judgment:**

Continue for 5 seconds.

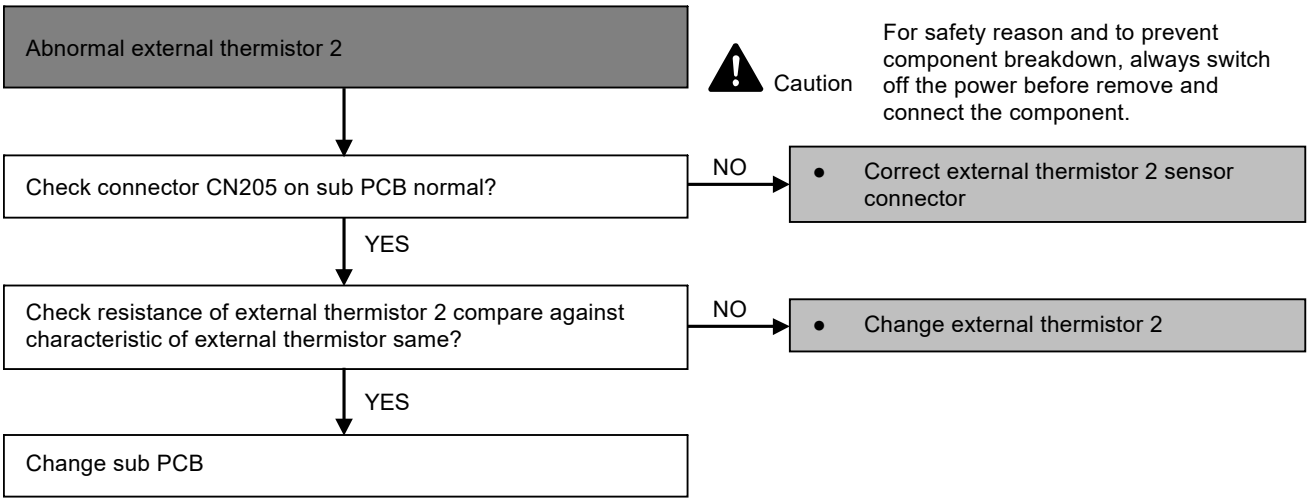

## 18.5.20 Indoor Backup Heater OLP Abnormality (H70)

**Malfunction Decision Conditions:**

During operation of indoor backup heater, when no power supplies to indoor backup heater or OLP open circuit.

**Malfunction Caused:**

1 Faulty power supply connector connection.
2 Faulty connector connection.
3 Faulty indoor backup heater overload protector (OLP).
4 Faulty indoor unit PCB (main).

**Abnormality Judgment:**

Continue for 60 seconds.

**Troubleshooting:** Caution

For safety reason and to prevent component breakdown, always switch off the power before remove and connect the component.

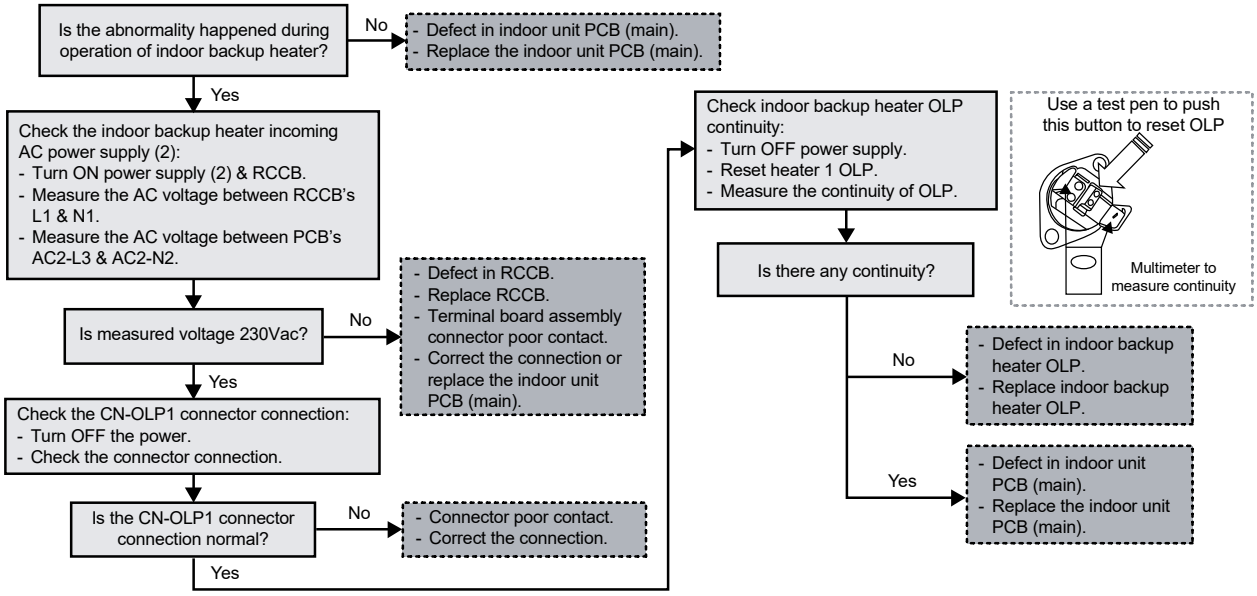

## 18.5.21 Tank 1 Temperature Sensor Abnormality (H72)

**Malfunction Decision Conditions:**

When tank connection is set to ON, the temperatures detected by the tank 1 temperature sensor are used to determine sensor error.

**Malfunction Caused:**

1 Faulty connector connection.
2 Faulty sensor.
3 Faulty indoor unit PCB (main).

**Abnormality Judgment:**

Continue for 5 seconds.

## Troubleshooting:

**Caution** For safety reason and to prevent component breakdown, always switch off the power before remove and connect the component.

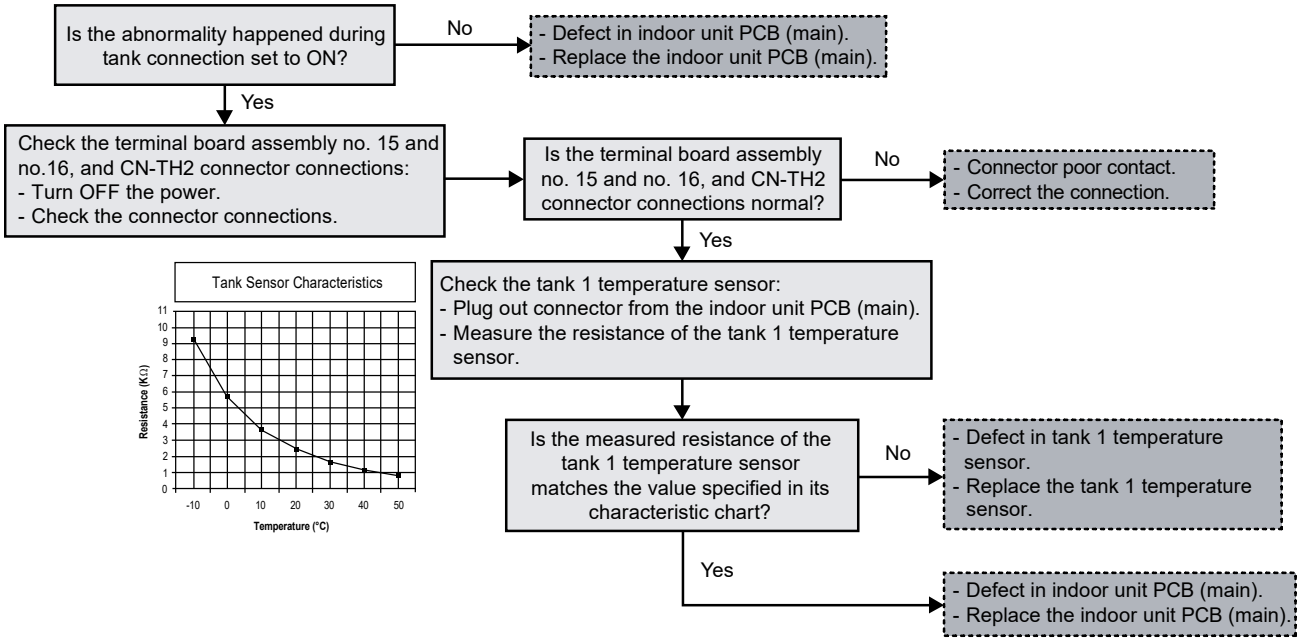

## 18.5.22 PCB Communication Error (H74)

**Malfunction Decision Conditions:**

When External PCB connection is select “YES” and no communication with External PCB micon for 10 seconds and above.

**Malfunction Caused:**

1 Faulty connector connection.
2 Faulty indoor PCB.
3 Faulty indoor sub PCB.

**Abnormality Judgment:**

After 1 minute operation started.

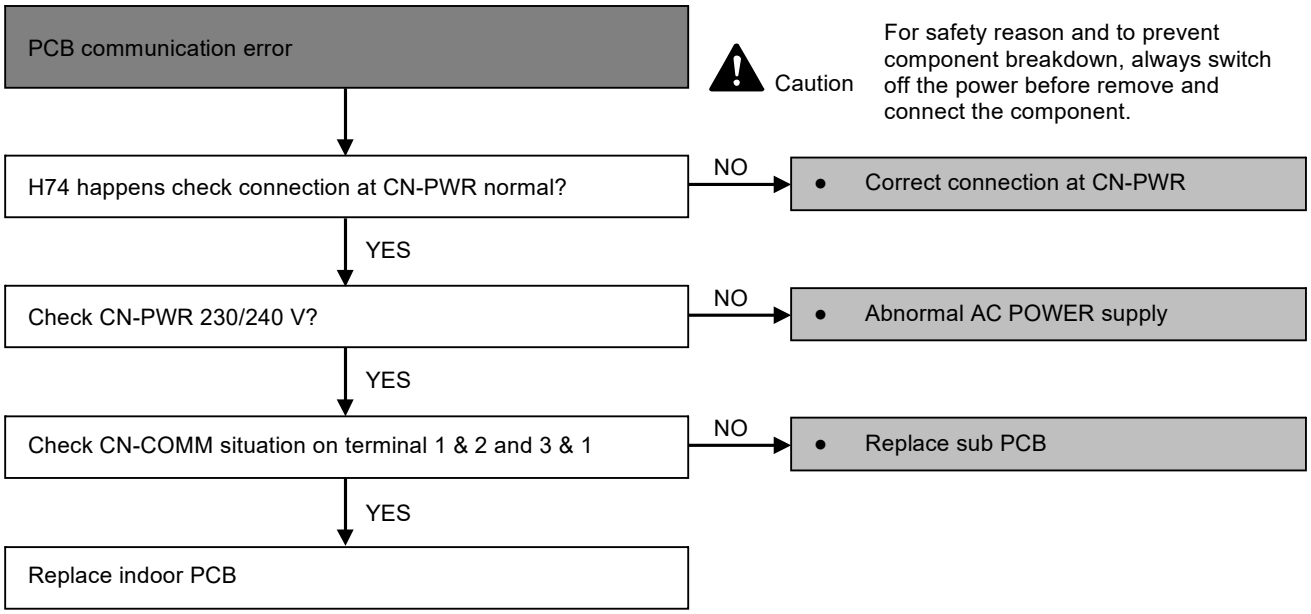

## 18.5.23 Indoor-Control Panel 1 Communication Abnormality, Control Panel 1-Control Panel 2 Communication Abnormality (H76)

**Malfunction Decision Conditions:**

During standby and operation of cooling and heating, indoor-control panel error occur.

**Malfunction Caused:**

1 Faulty connector connection.
2 Faulty control panel.
3 Faulty indoor unit PCB (main).

**Troubleshooting:** **Caution** For safety reason and to prevent component breakdown, always switch off the power before remove and connect the component.

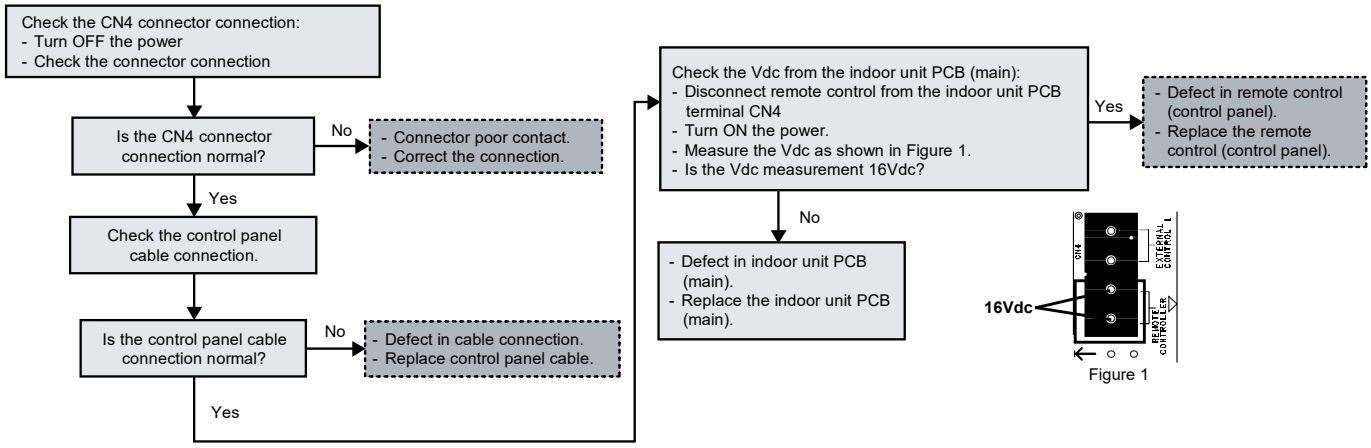

Figure 1

## 18.5.24 Indoor/Outdoor Abnormal Communication (H90)

**Malfunction Decision Conditions:**

During operation of cooling and heating, the data received from outdoor unit in indoor unit signal transmission is checked whether it is normal.

**Malfunction Caused:**

1. Faulty outdoor unit PCB (main).
2. Faulty indoor unit PCB (main).
3. Indoor-outdoor signal transmission error due to wrong wiring.
4. Indoor-outdoor signal transmission error due to breaking of wire in the connection wires between the indoor and outdoor units.
5. Indoor-outdoor signal transmission error due to disturbed power supply waveform.

**Abnormality Judgment:**

Continue for 1 minute after operation.

**Troubleshooting:** Caution

For safety reason and to prevent component breakdown, always switch off the power before remove and connect the component.

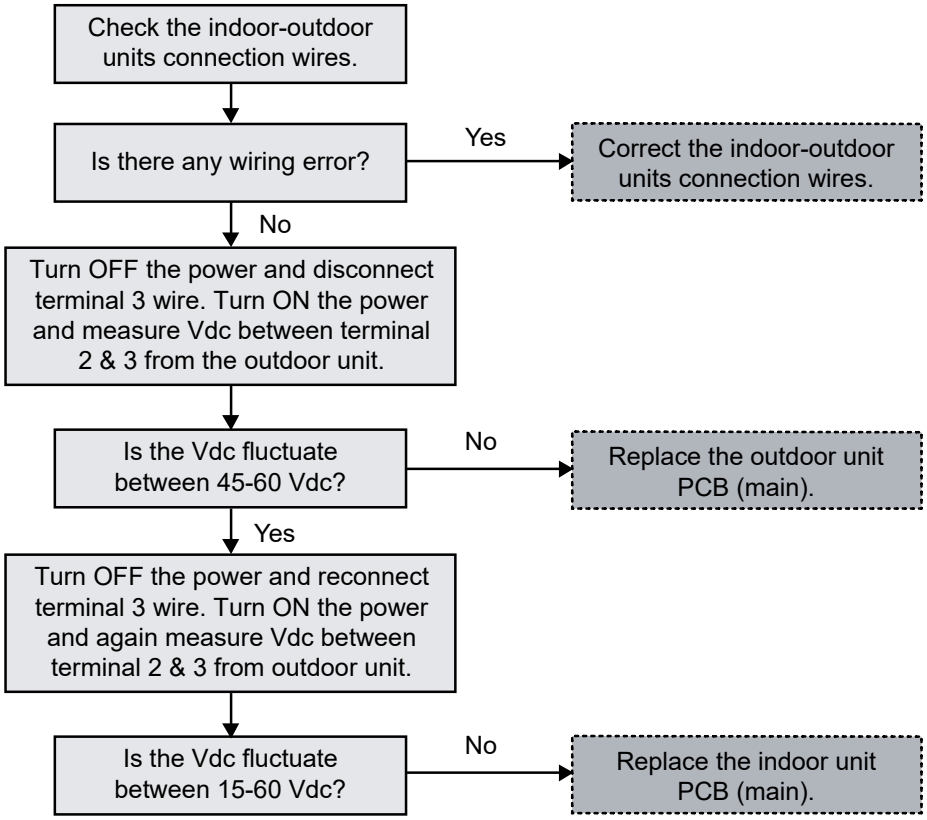

## 18.5.25 Tank Booster Heater OLP Abnormality (H91)

**Malfunction Decision Conditions:**

During operation of tank booster heater, and tank booster heater OLP open circuit.

**Malfunction Caused:**

1 Faulty connector connection.
2 Faulty tank booster heater overload protector (OLP).
3 Faulty indoor unit PCB (main).

**Abnormality Judgment:**

Continue for 60 seconds.

**Troubleshooting:** **Caution** For safety reason and to prevent component breakdown, always switch off the power before remove and connect the component.

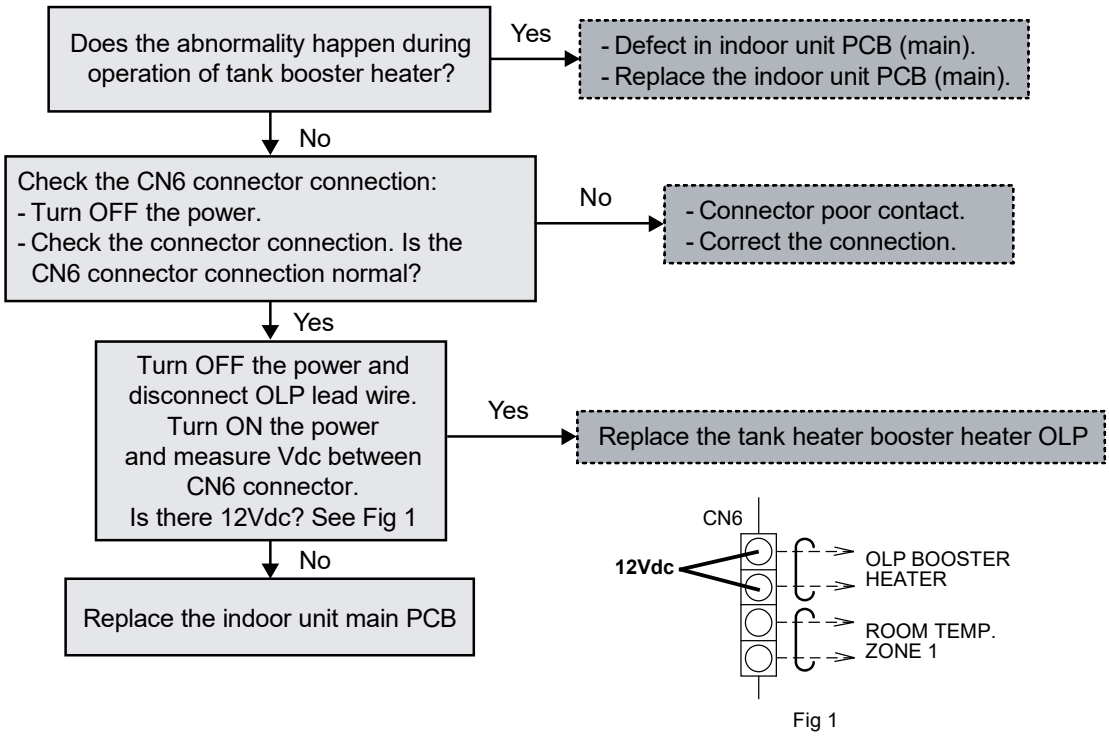


Fig 1

## 18.5.26 Unspecified Voltage between Indoor and Outdoor (H95)

**Malfunction Decision Conditions:**

The supply power is detected for its requirement by the indoor/outdoor transmission.

**Malfunction Caused:**

1 Insufficient power supply.
2 Faulty outdoor unit PCB (noise filter/main).

**Troubleshooting:** Caution

For safety reason and to prevent component breakdown, always switch off the power before remove and connect the component.

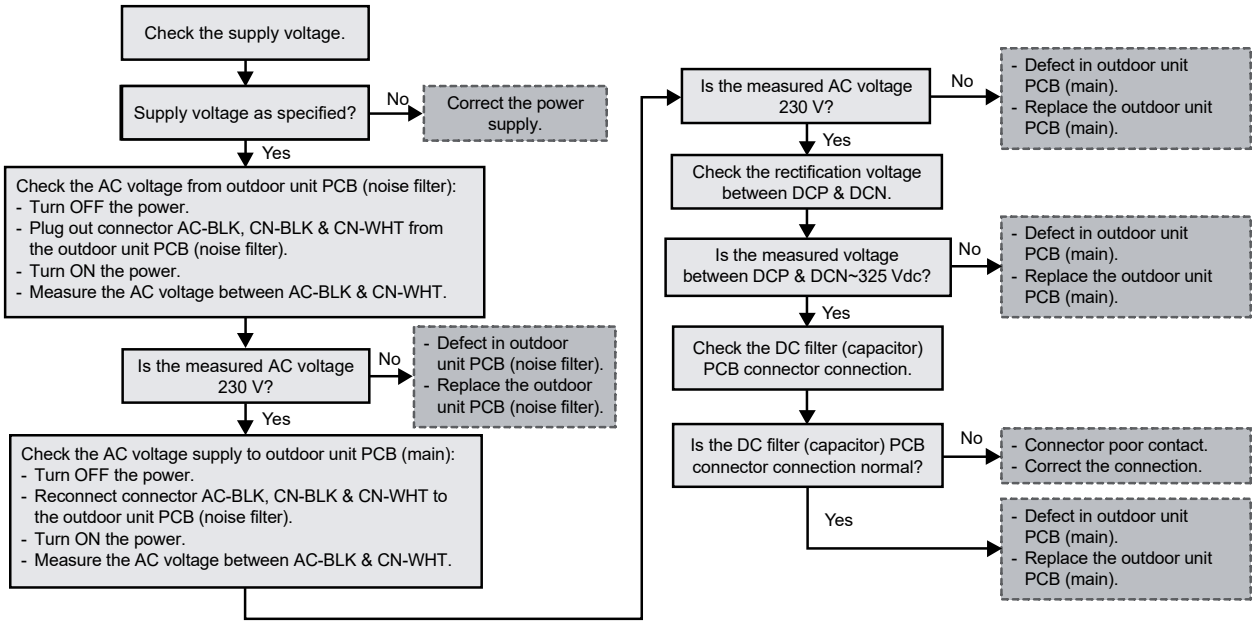

## 18.5.27 Outdoor High Pressure Protection (H98 / F95)

**Malfunction Decision Conditions:**

During operation of cooling / heating, when pressure 4.2 MPa and above is detected by outdoor high pressure sensor.

**Malfunction Caused:**

1 Faulty water pump.
2 Insufficient water flow rate in system.
3 Water leak in system.
4 Dust accumulation in the outdoor unit heat exchanger.
5 Air short circuit at outdoor.
6 Faulty outdoor unit fan motor.
7 2/3 way closed.
8 Clogged expansion valve or strainer.
9 Excessive refrigerant.
10 Faulty outdoor high pressure sensor.
11 Faulty outdoor unit PCB (main).

**Troubleshooting:** **Caution** For safety reason and to prevent component breakdown, always switch off the power before remove and connect the component.

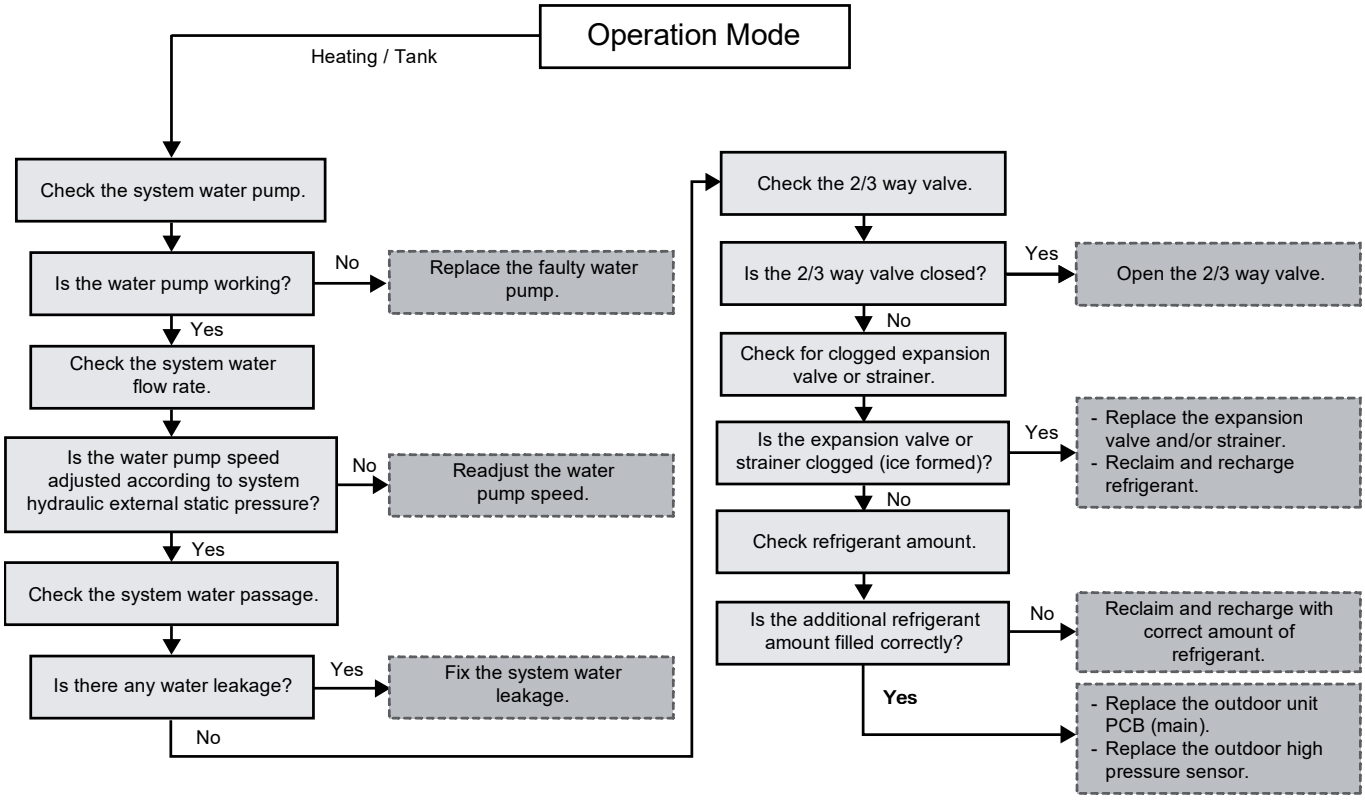

# Troubleshooting:

**Caution** For safety reason and to prevent component breakdown, always switch off the power before remove and connect the component.

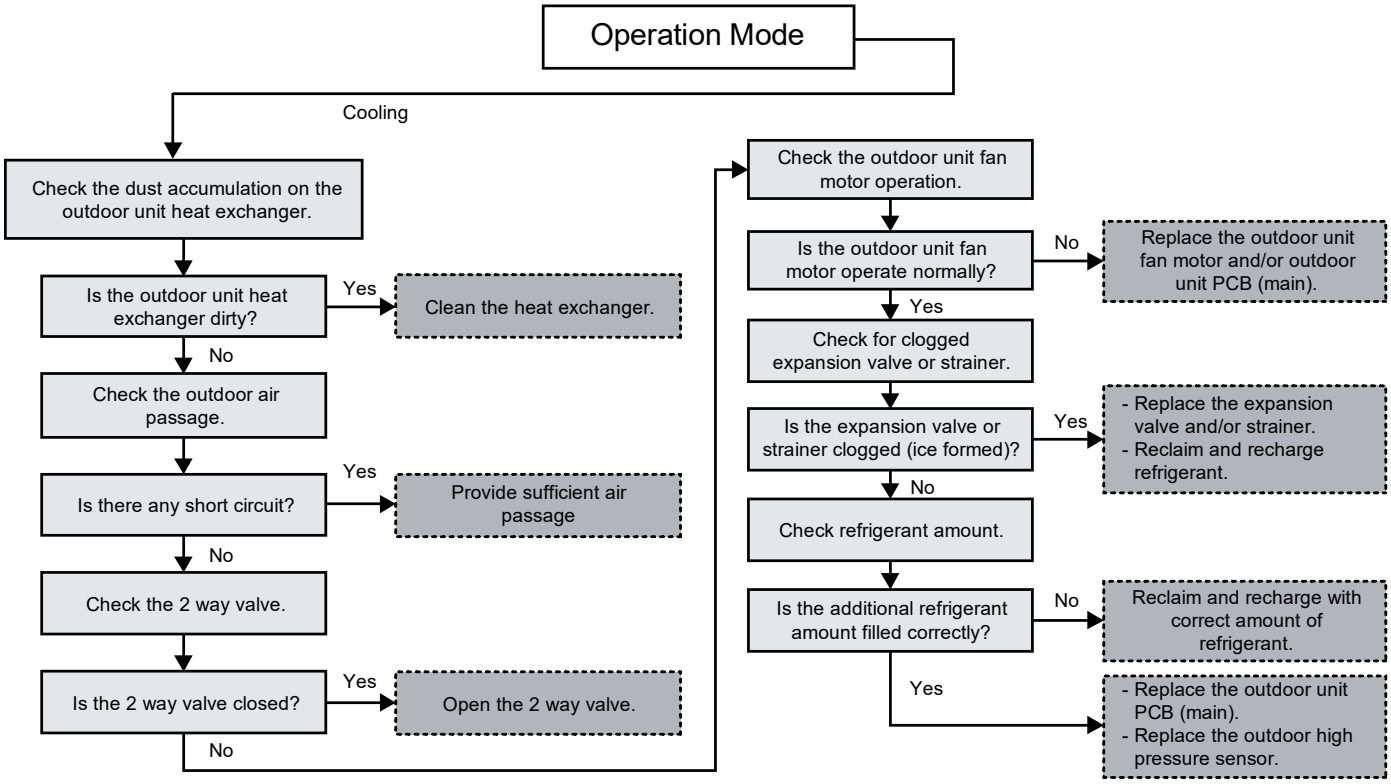

## 18.5.28 Indoor Freeze-up Protection (H99)

**Malfunction Decision Conditions:**

During anti-freezing control in cooling operation, when the indoor refrigerant liquid temperature < 0°C.

**Malfunction Caused:**

1 Faulty water pump.
2 Insufficient water flow rate in system.
3 Water leak in system.
4 2 way valve partially closed.
5 Clogged expansion valve or strainer.
6 Refrigerant shortage (refrigerant leakage).
7 Faulty indoor refrigerant liquid temperature sensor.
8 Faulty indoor unit PCB (main).

**Troubleshooting:** Caution

For safety reason and to prevent component breakdown, always switch off the power before remove and connect the component.

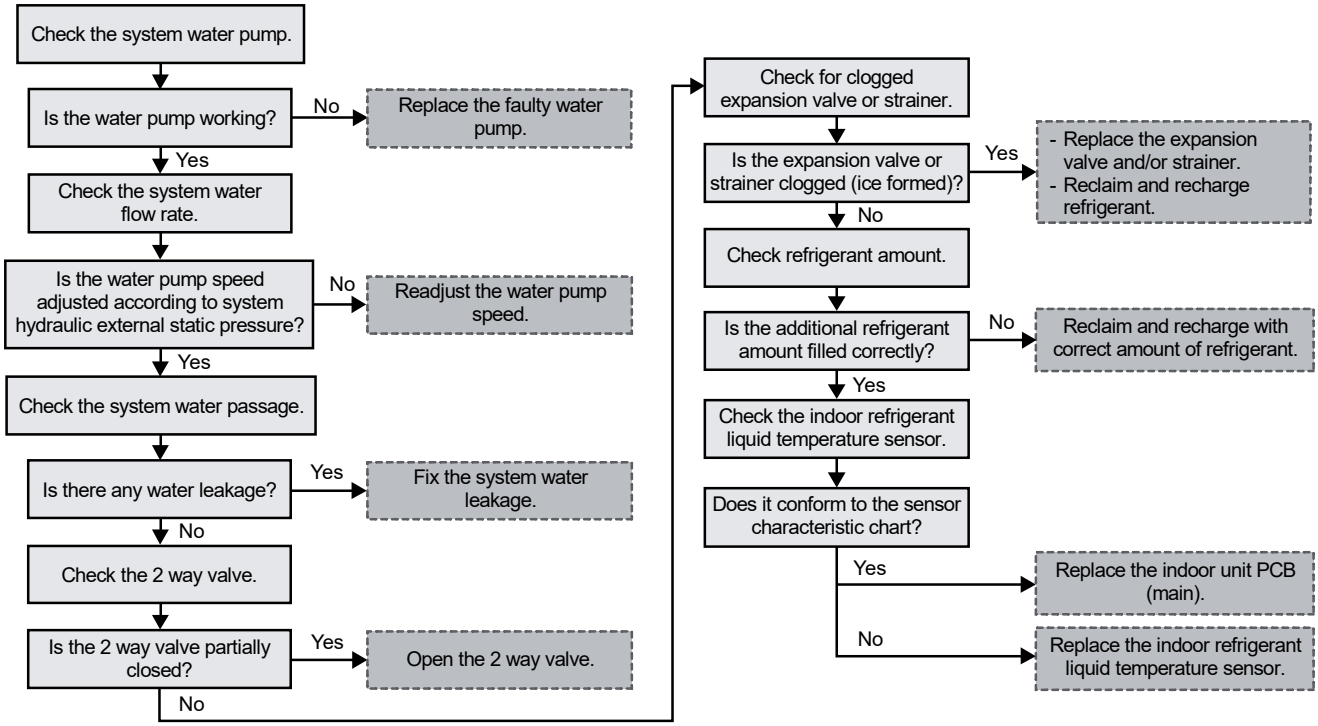

## 18.5.29 Outdoor High Pressure Switch Activate (F12)

**Malfunction Decision Conditions:**

During operation of cooling and heating, when pressure 4.5 MPa and above is detected by outdoor high pressure switch.

**Malfunction Caused:**

1 Dust accumulation on the outdoor unit heat exchanger.
2 Air short circuit at outdoor unit.
3 Faulty water pump.
4 Insufficient water flow rate in system.
5 Water leak in system.
6 2/3 way valve closed.
7 Clogged expansion valve or strainer.
8 Excessive refrigerant.
9 Faulty outdoor high pressure sensor and switch.
10 Faulty outdoor unit PCB.

**Abnormality Judgment:**

Continue 4 times in 20 minutes.

**Troubleshooting:** Caution

For safety reason and to prevent component breakdown, always switch off the power before remove and connect the component.

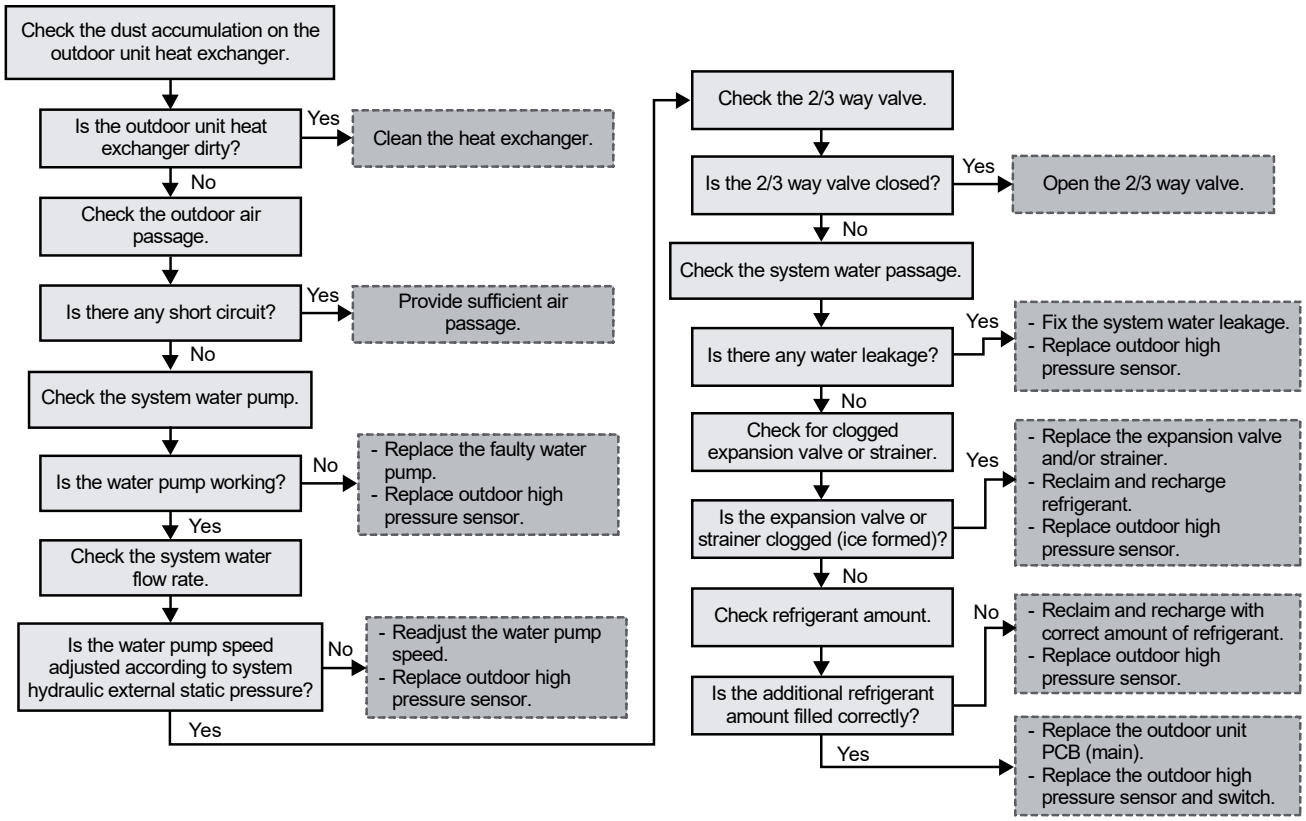

## 18.5.30 Compressor Rotation Failure (F14)

**Malfunction Decision Conditions:**

A compressor rotation failure is detected by checking the compressor running condition through the position detection circuit.

**Malfunction Caused:**

1 Compressor terminal disconnect.
2 Faulty outdoor unit PCB (main).
3 Faulty compressor.

**Abnormality Judgment:**

Continue 4 times in 20 minutes.

**Troubleshooting:** Caution

For safety reason and to prevent component breakdown, always switch off the power before remove and connect the component.

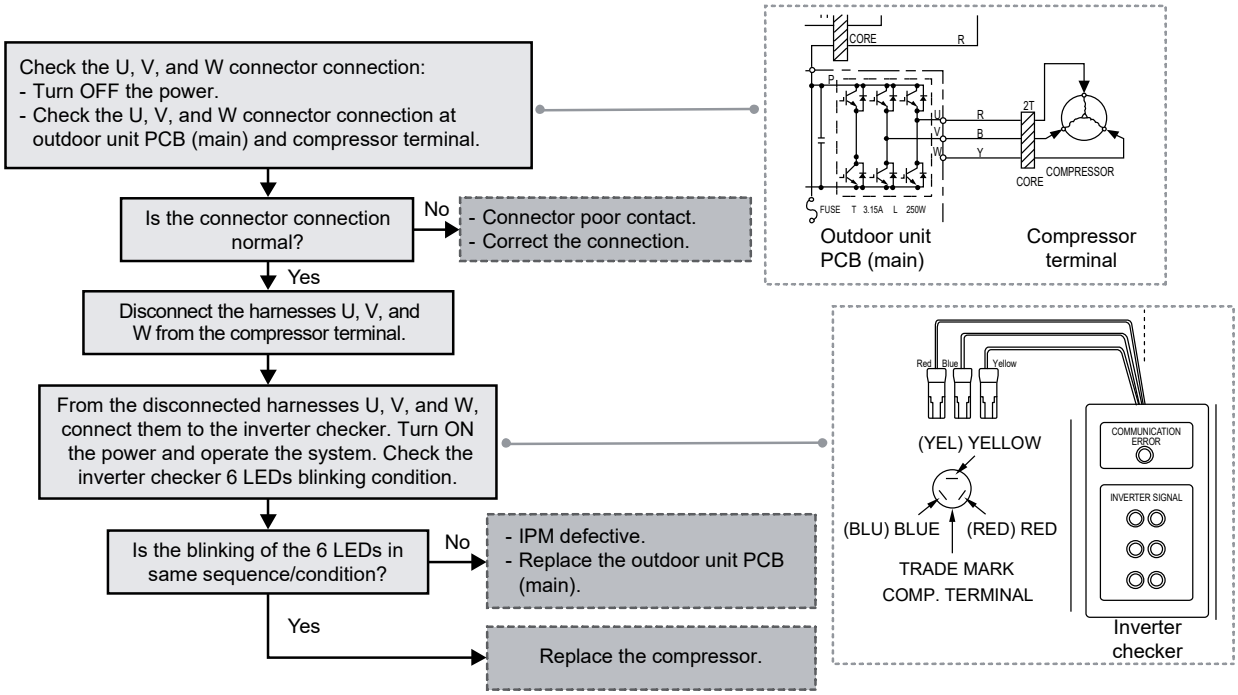

## 18.5.31 Outdoor Fan Motor (DC Motor) Mechanism Locked (F15)

**Malfunction Decision Conditions:**

The rotation speed detected by the Hall IC of the fan motor during fan motor operation is used to determine abnormal fan motor (feedback of rotation > 2550 rpm or < 50 rpm).

**Malfunction Caused:**

1 Operation stop due to short circuit inside the fan motor winding.
2 Operation stop due to breaking of wire inside the fan motor.
3 Operation stop due to breaking of fan motor lead wires.
4 Operation stop due to fan motor Hall IC malfunction.
5 Operation error due to faulty outdoor unit PCB.

**Abnormality Judgment:**

Continue 2 times in 30 minutes.

**Troubleshooting:** Caution

For safety reason and to prevent component breakdown, always switch off the power before remove and connect the component.

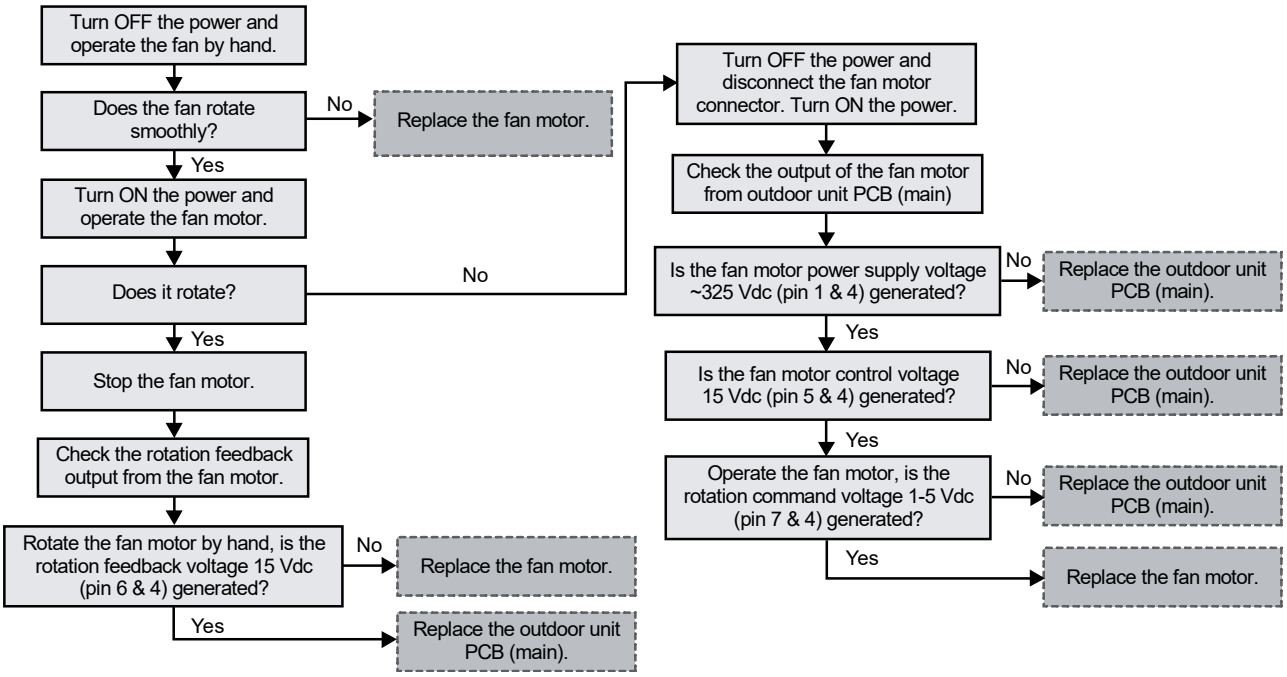

## 18.5.32 Input Over Current Detection (F16)

**Malfunction Decision Conditions:**

During operation of cooling and heating, when outdoor current above WDG05LE5 15.0A & WDG07 / 09LE5 18.0A is detected by the current transformer (CT) in the outdoor unit PCB.

**Malfunction Caused:**

1 Excessive refrigerant.
2 Faulty outdoor unit PCB (main).

**Abnormality Judgment:**

Continue 3 times in 20 minutes.

**Troubleshooting:** ⚠ **Caution** For safety reason and to prevent component breakdown, always switch off the power before remove and connect the component.

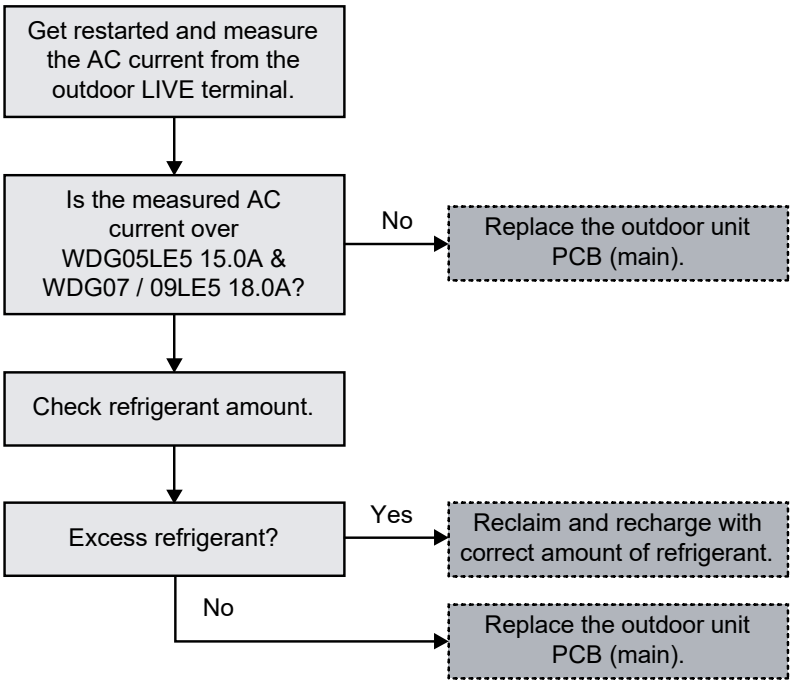

## 18.5.33 Compressor Overheating (F20)

**Malfunction Decision Conditions:**

During operation of cooling and heating, when temperature above 112°C is detected by the compressor tank temperature sensor.

**Malfunction Caused:**

1 Faulty compressor tank temperature sensor.
2 2/3 way valve closed.
3 Refrigerant shortage (refrigerant leakage).
4 Clogged expansion valve or strainer.
5 Faulty outdoor unit PCB (main).
6 Faulty compressor.

**Abnormality Judgment:**

Continue 4 times in 30 minutes.

### Troubleshooting:

**Caution** For safety reason and to prevent component breakdown, always switch off the power before remove and connect the component.

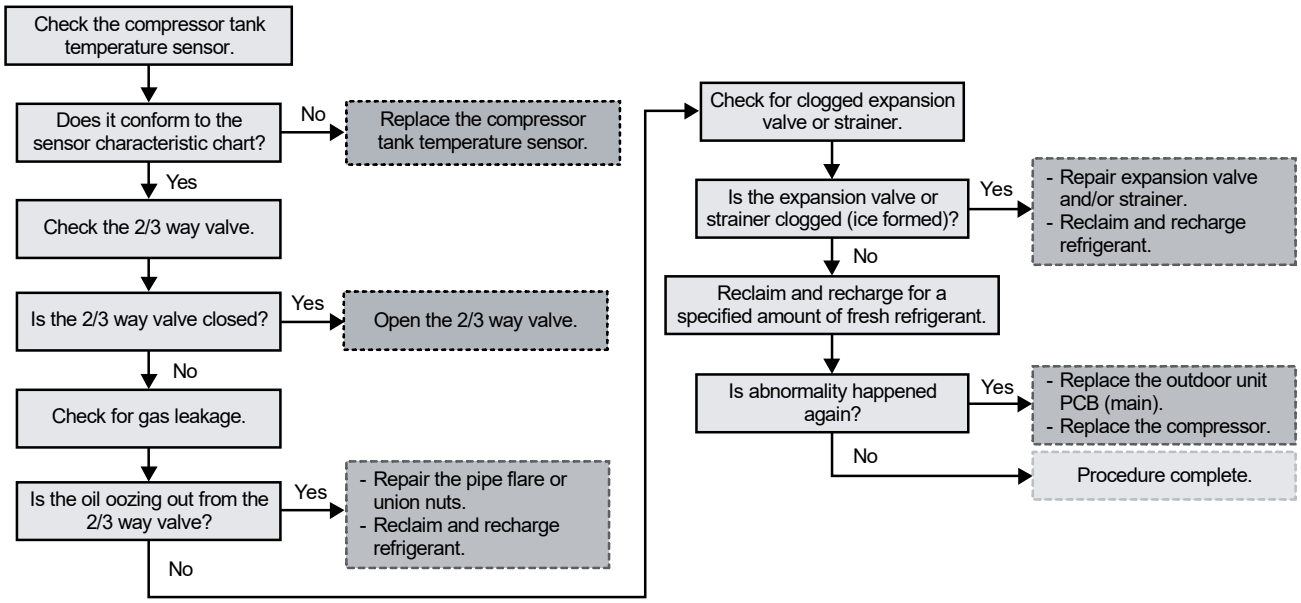

## 18.5.34 IPM Overheating (F22)

**Malfunction Decision Conditions:**

During operation of cooling and heating, when temperature 95°C is detected by the outdoor IPM temperature sensor.

**Malfunction Caused:**

1 Faulty outdoor unit fan motor.
2 Faulty outdoor unit PCB (main).

**Abnormality Judgment:**

Continue 3 times in 30 minutes.

**Troubleshooting:** Caution

For safety reason and to prevent component breakdown, always switch off the power before remove and connect the component.

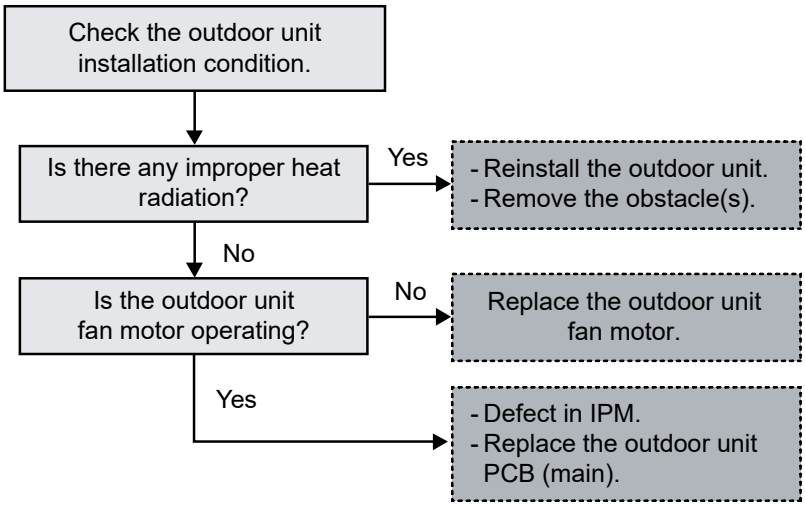

## 18.5.35 Output Over Current Detection (F23)

**Malfunction Decision Conditions:**

During operation of cooling and heating, when outdoor DC current is above set value is detected by the IPM DC Peak sensing circuitry in the outdoor unit PCB (main).

**Malfunction Caused:**

1 Faulty outdoor unit PCB (main).
2 Faulty compressor.

**Abnormality Judgment:**

Continue for 7 times.

## Troubleshooting:

**Caution** For safety reason and to prevent component breakdown, always switch off the power before remove and connect the component.

Check the compressor winding resistance:
- Turn OFF the power and disconnect the harnesses U, V, and W.
- Measure the winding resistance between U-V, V-W, and W-U.

→ Are the compressor's winding resistance (U-V, V-W, or U-W) shorted?

Yes →
- Compressor defective due to winding shorted.
- Replace the compressor.

No →
- Outdoor eletronic circuit defect due to power transistor shorted.
- Replace the outdoor unit PCB (main).

■ Checking the power transistor

- Never touch any live parts for at least 10 minutes after turning off the circuit breaker.
- If unavoidably necessary touch a live part, make sure the power transistor's supply voltage is below 50 V using the tester.
- For the UVW, make measurements at the Faston terminal on the board or the relay connector.

| Tester's negative terminal | Power transistor (+) | UVW | Power transistor (-) | UVW |
|---|---|---|---|---|
| Tester's positive terminal | UVW | Power transistor (+) | UVW | Power transistor (-) |
| Normal resistance | Several kohms to several Mohms | | | |
| Abnormal resistance | 0 or ∞ | | | |

## 18.5.36 Refrigeration Cycle Abnormality (F24)

**Malfunction Decision Conditions:**

1. During compressor running (heating / cooling) for more than 10 minutes except deice, pumpdown and test mode.
2. During heating / cooling, water outlet and water inlet difference is less than 1°C.
3. During heating / cooling, high pressure < 1MPa (143 Psi) for more than 10 minutes or < 0.2 MPa (28 Psi) for more than 5 minutes.
4. During heating / cooling, discharge temperature - saturation temperature of high pressure ≥ 60°C.

**Malfunction Caused:**

1. Refrigerant shortage (refrigerant leakage).
2. Faulty indoor water inlet, indoor water outlet, compressor discharge temp sensor or high pressure sensor.
3. 2/3 way valve closed.
4. Clogged expansion valve or strainer.
5. Faulty indoor or outdoor PCB (main).

**Abnormality Judgment:**

Continue 2 times in 30 minutes.

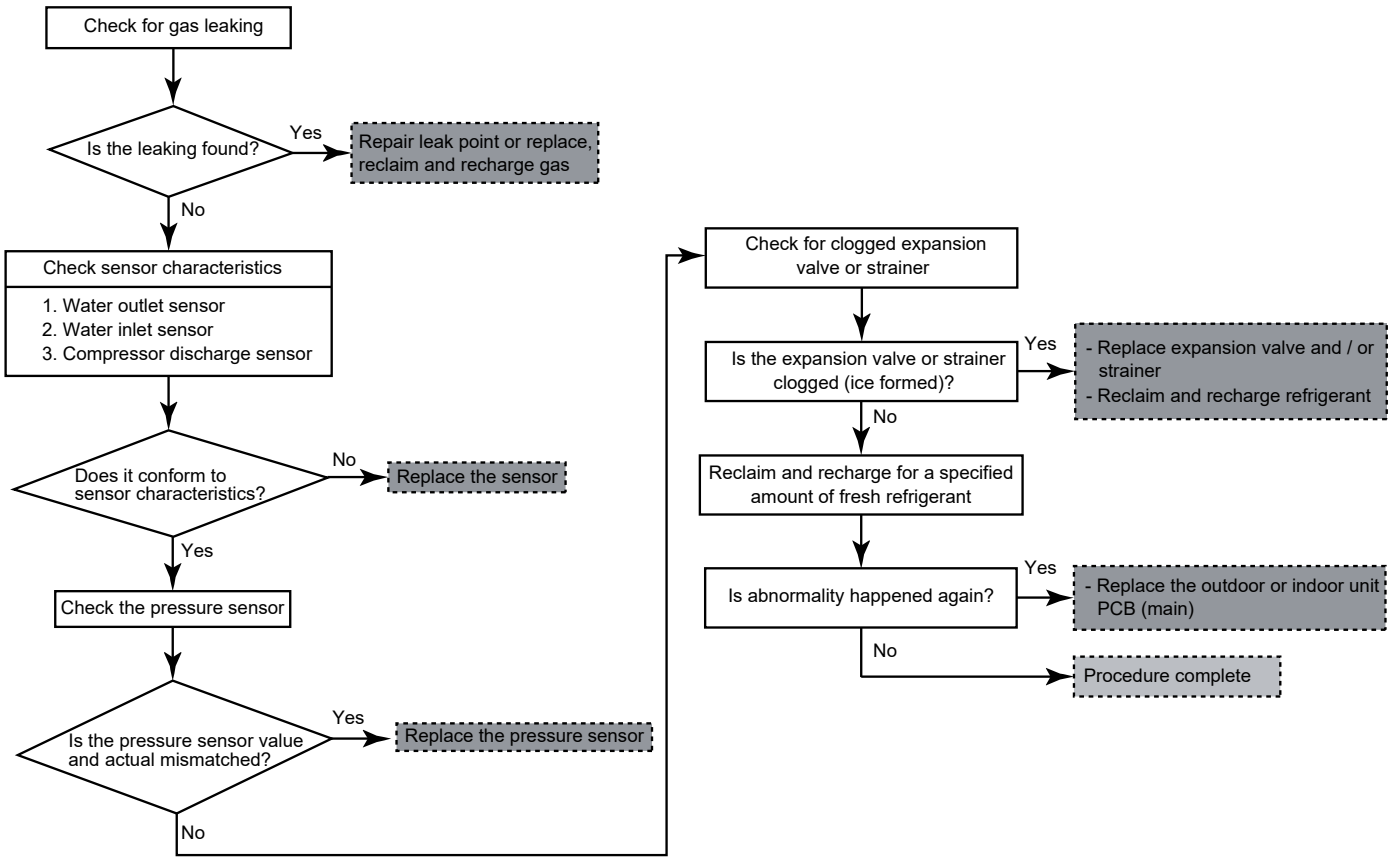

## 18.5.37 Four Way Valve Abnormality (F25)

**Malfunction Decision Conditions:**

1 During heating operation, when the indoor pipe temperature of thermostat ON indoor unit < 0°C.
2 During cooling operation, when the indoor pipe temperature of thermostat ON indoor unit > 45°C.

**Malfunction Caused:**

1 Faulty sensor.
2 Faulty connector connection.
3 Faulty outdoor unit PCB (noise filter/main).
4 Faulty four way valve.

**Abnormality Judgment:**

Continue 4 times in 30 minutes.

**Troubleshooting:** Caution

For safety reason and to prevent component breakdown, always switch off the power before remove and connect the component.

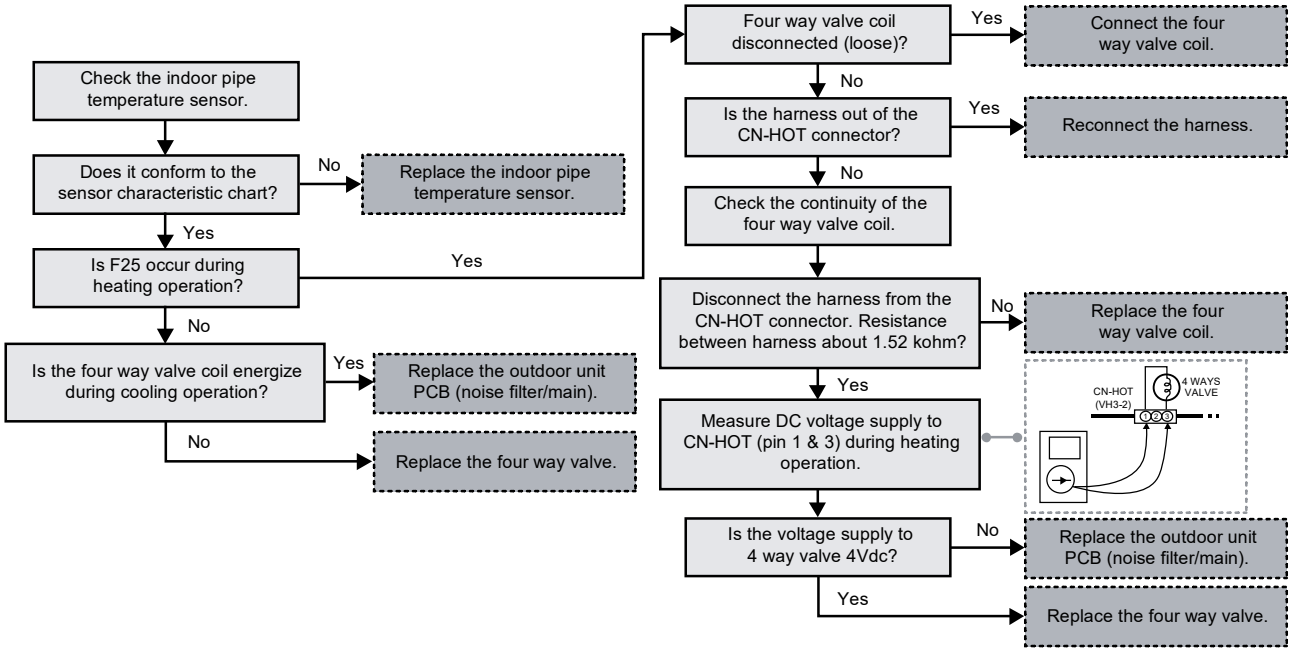

## 18.5.38 Outdoor High Pressure Switch Abnormal (F27)

**Malfunction Decision Conditions:**

During compressor stop, and outdoor high pressure switch is remain opened.

**Malfunction Caused:**

1 Faulty connector connection.
2 Faulty switch.
3 Faulty outdoor unit PCB (main).

**Abnormality Judgment:**

Continue for 1 minute.

**Troubleshooting:** **Caution** For safety reason and to prevent component breakdown, always switch off the power before remove and connect the component

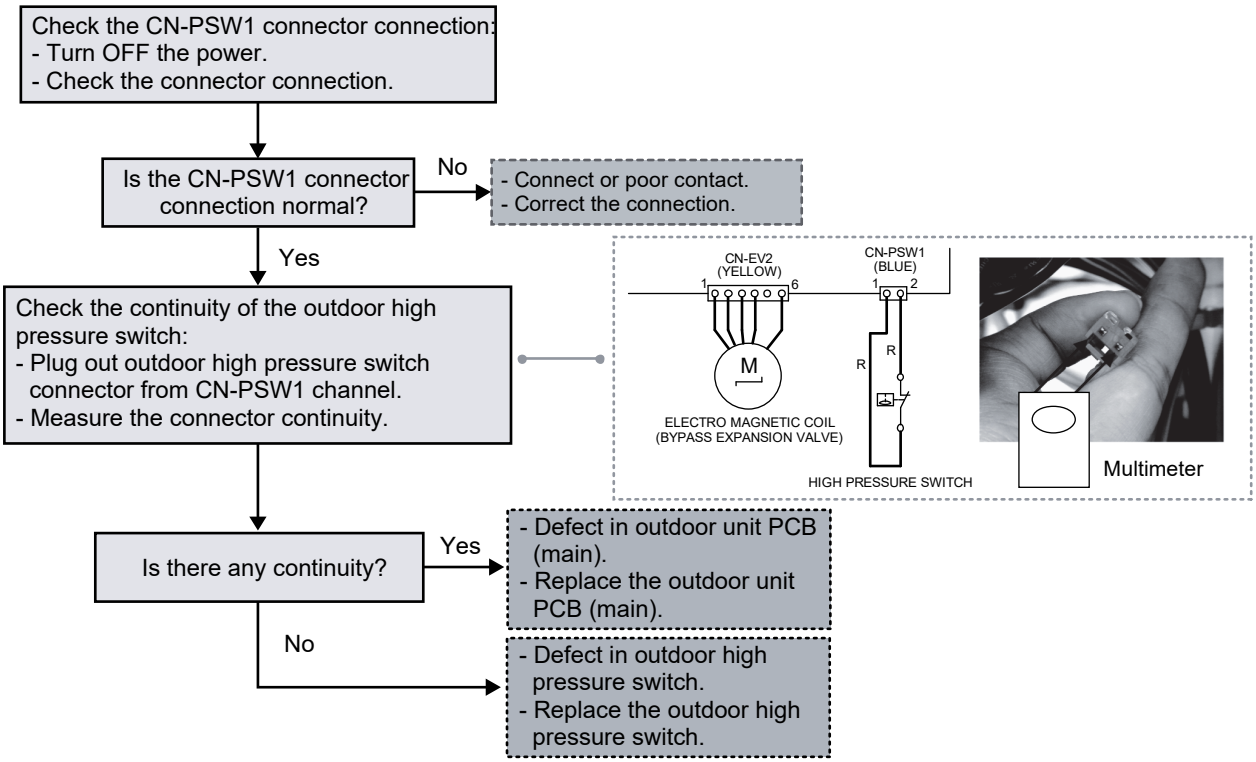

## 18.5.39 Low Discharge Superheat (F29)

**Malfunction Decision Conditions:**

During startup and operation of cooling and heating, the temperatures detected by the outdoor pipe temperature sensor are used to determine sensor error.

**Malfunction Caused:**

1 Faulty connector connection.
2 Faulty sensor.
3 Faulty outdoor unit PCB (main).
4 Faulty High Pressure Switch
5 Refrigerant shortage (refrigerant leakage).

**Abnormality Judgment:**

1 times occurrence within 2550 minutes.

## Troubleshooting:

**Caution** For safety reason and to prevent component breakdown, always switch off the power before remove and connect the component.

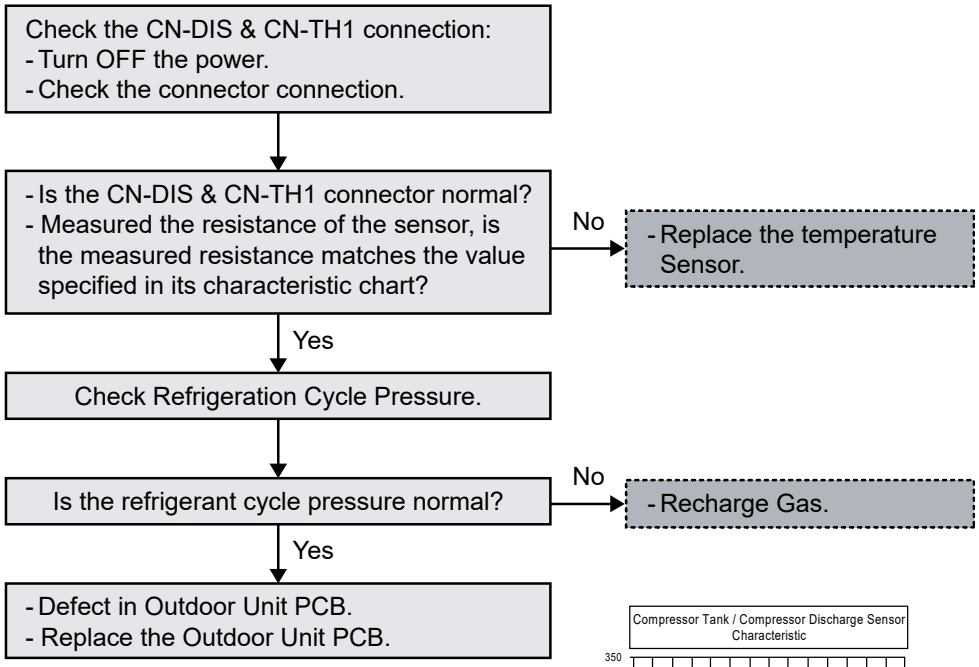


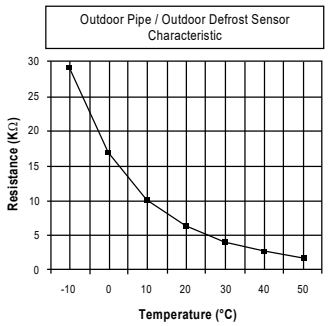


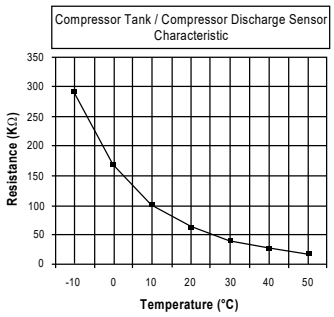

## 18.5.40 Outdoor Water Outlet Temperature Sensor 2 Abnormality (F30)

**Malfunction Decision Conditions:**

During startup and operation of cooling and heating, the temperatures detected by the outdoor water outlet temperature sensor 2 are used to determine sensor error.

**Malfunction Caused:**

1 Faulty connector connection.
2 Faulty sensor.
3 Faulty indoor unit PCB.

**Abnormality Judgment:**

Continue for 5 seconds.

**Troubleshooting:** Caution

For safety reason and to prevent component breakdown, always switch off the power before remove and connect the component.

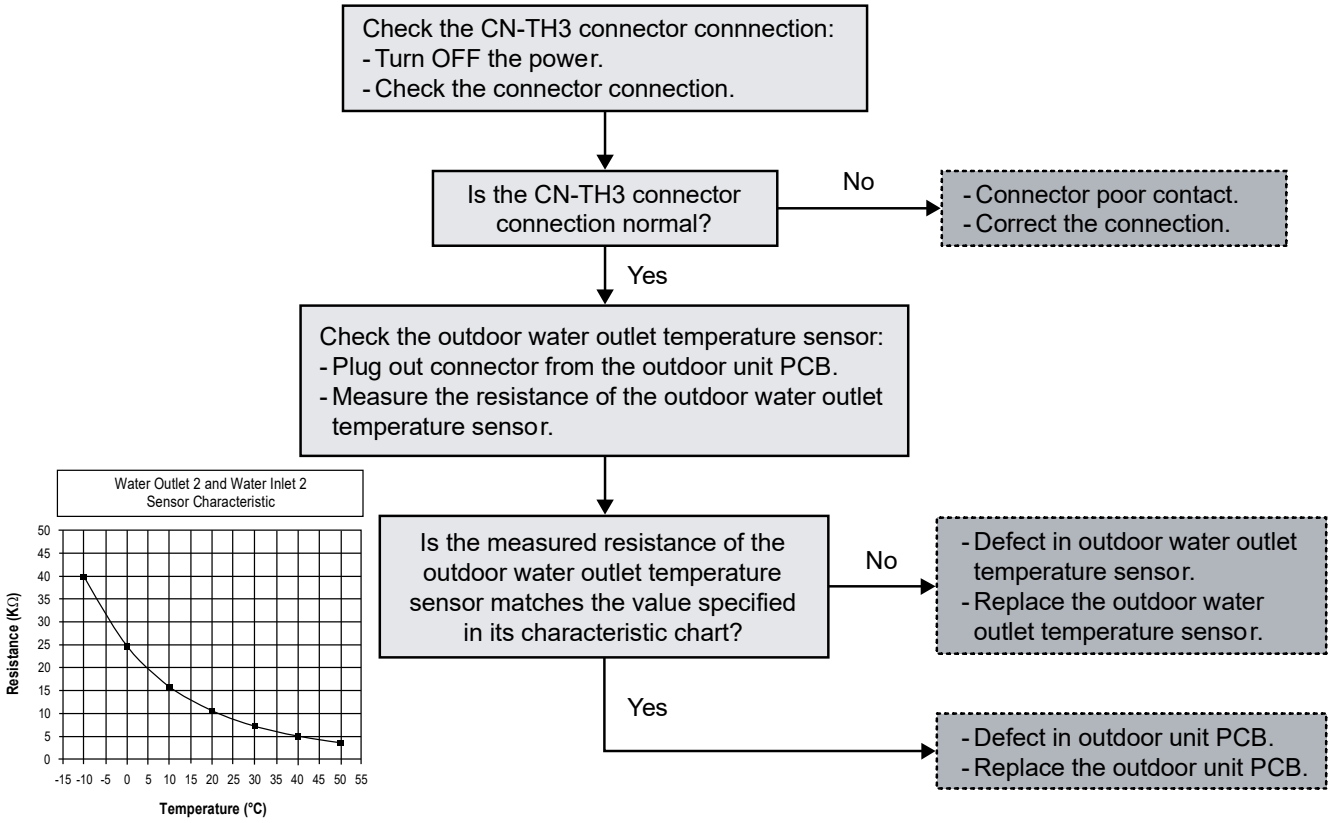

## 18.5.41 Outdoor Air Temperature Sensor Abnormality (F36)

**Malfunction Decision Conditions:**

During startup and operation of cooling and heating, the temperatures detected by the outdoor air temperature sensor are used to determine sensor error.

**Malfunction Caused:**

1 Faulty connector connection.
2 Faulty sensor.
3 Faulty outdoor unit PCB (main).

**Abnormality Judgment:**

Continue for 5 seconds.

**Troubleshooting:** Caution

For safety reason and to prevent component breakdown, always switch off the power before remove and connect the component.

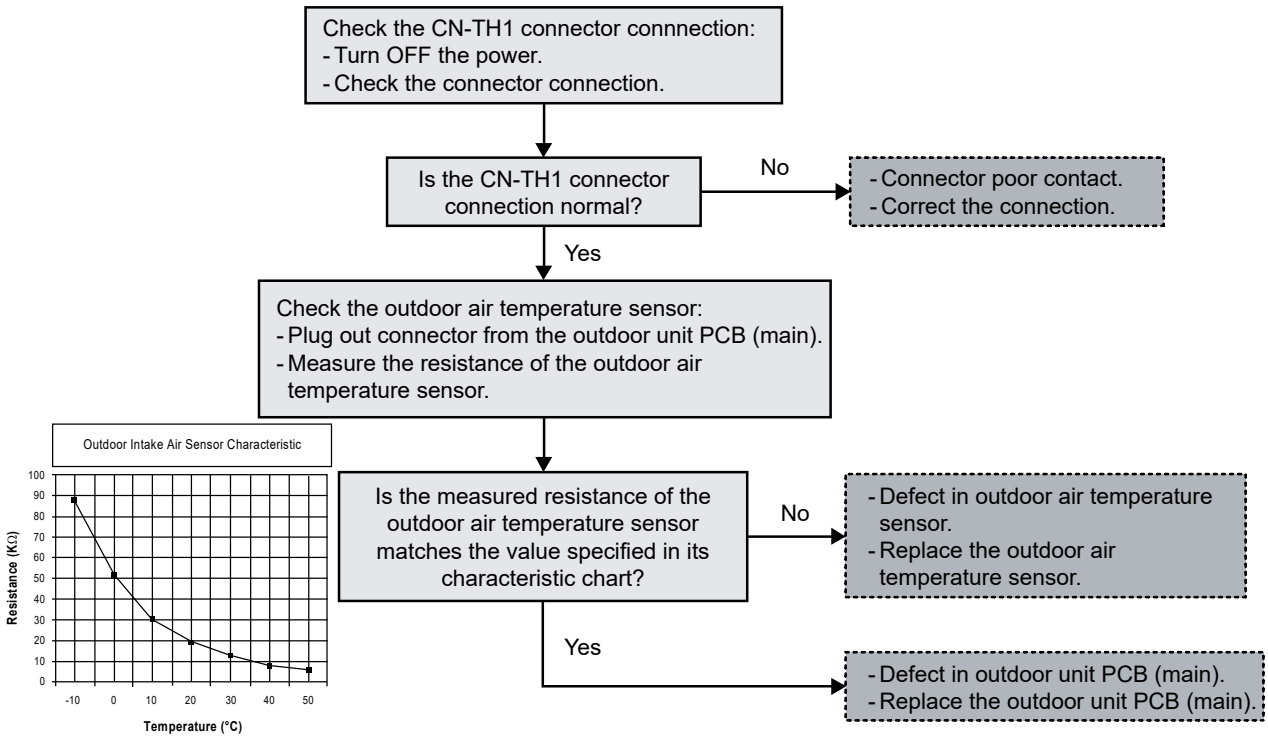

## 18.5.42 Indoor Water Inlet Temperature Sensor Abnormality (F37)

**Malfunction Decision Conditions:**

During startup and operation of cooling and heating, the temperatures detected by the indoor water inlet temperature sensor are used to determine sensor error.

**Malfunction Caused:**

1 Faulty connector connection.
2 Faulty sensor.
3 Faulty indoor unit PCB (main).

**Abnormality Judgment:**

Continue for 5 seconds.

## Troubleshooting:

**Caution** For safety reason and to prevent component breakdown, always switch off the power before remove and connect the component.

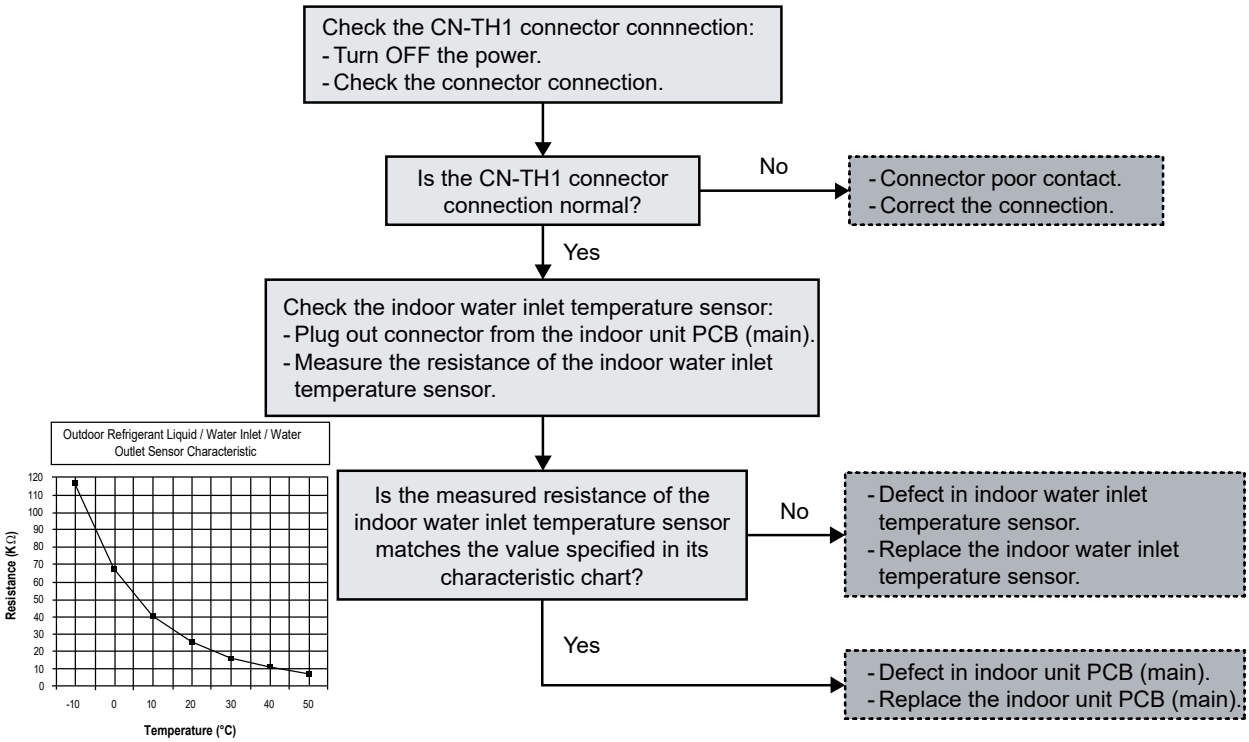

## 18.5.43 Outdoor Discharge Pipe Temperature Sensor Abnormality (F40)

**Malfunction Decision Conditions:**

During startup and operation of cooling and heating, the temperatures detected by the outdoor discharge pipe temperature sensor are used to determine sensor error.

**Malfunction Caused:**

1 Faulty connector connection.
2 Faulty sensor.
3 Faulty outdoor unit PCB (main).

**Abnormality Judgment:**

Continue for 5 seconds.

## Troubleshooting:

**Caution** For safety reason and to prevent component breakdown, always switch off the power before remove and connect the component.

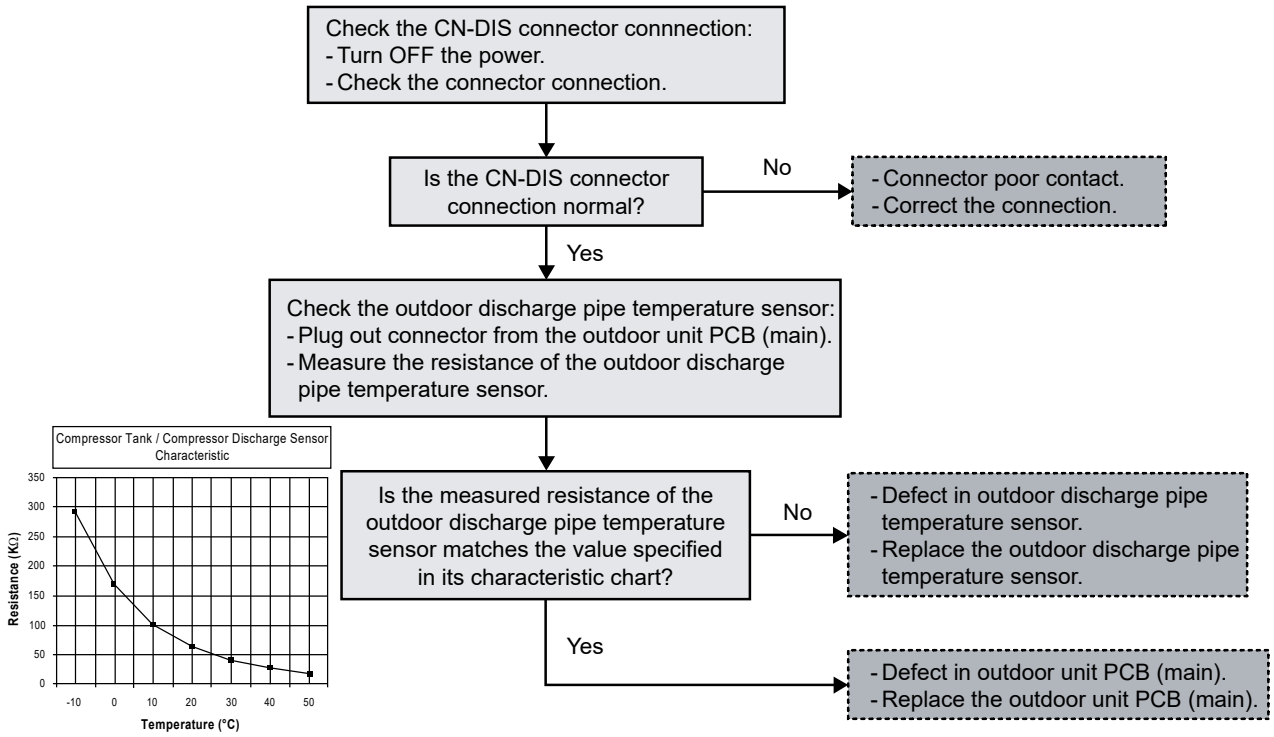

## 18.5.44 Power Factor Correction (PFC) Abnormality (F41)

**Malfunction Decision Conditions:**

During operation of cooling and heating, when the PFC protection circuitry in the outdoor unit PCB (main) senses abnormal high DC voltage level.

**Malfunction Caused:**

1 Power supply surge.
2 Compressor windings not uniform.
3 Faulty outdoor unit PCB (main).

**Abnormality Judgment:**

Continue 4 times in 10 minutes.

**Troubleshooting:** Caution

For safety reason and to prevent component breakdown, always switch off the power before remove and connect the component.

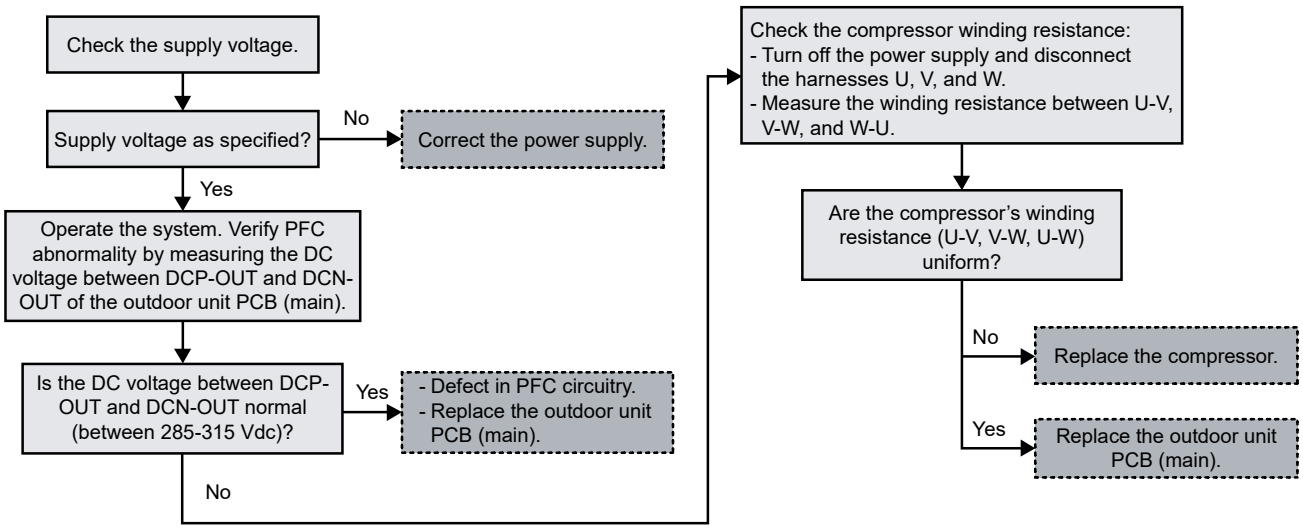

## 18.5.45 Outdoor Pipe Temperature Sensor Abnormality (F42)

**Malfunction Decision Conditions:**

During startup and operation of cooling and heating, the temperatures detected by the outdoor pipe temperature sensor are used to determine sensor error.

**Malfunction Caused:**

1 Faulty connector connection.
2 Faulty sensor.
3 Faulty outdoor unit PCB (main).

**Abnormality Judgment:**

Continue for 5 seconds.

## Troubleshooting:

**Caution** For safety reason and to prevent component breakdown, always switch off the power before remove and connect the component.

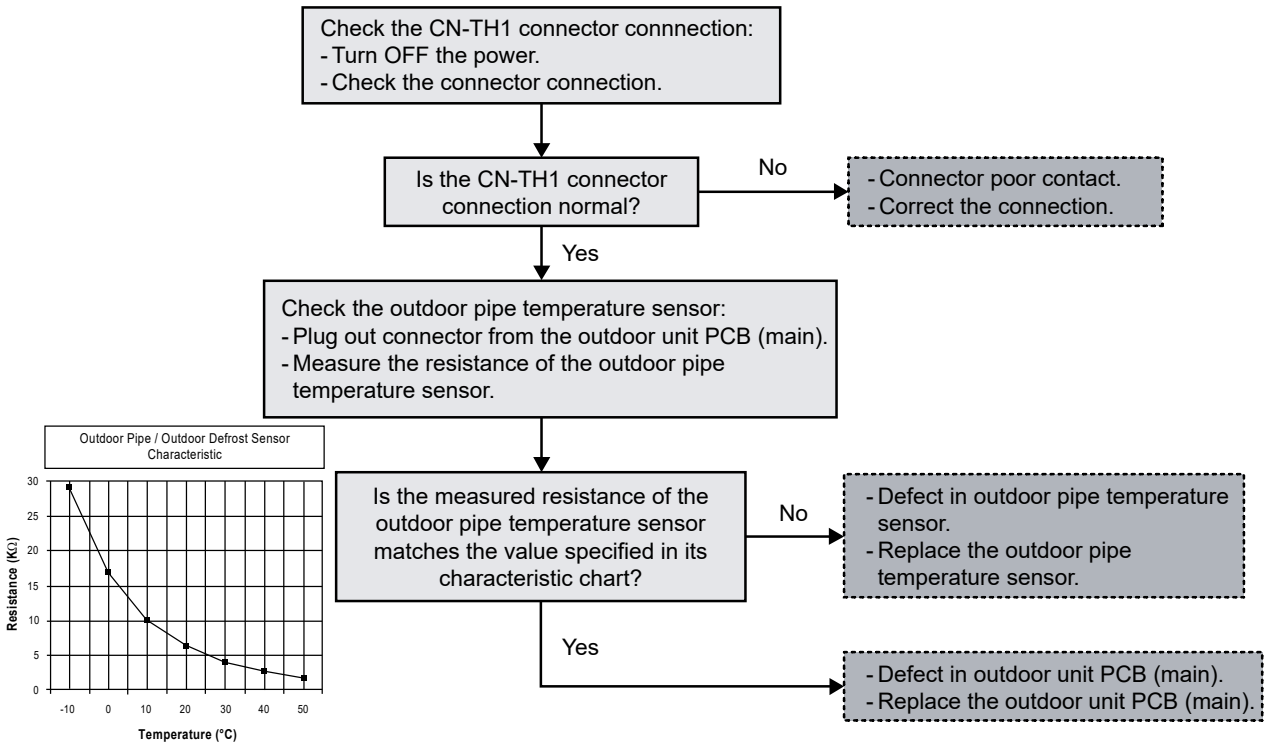

## 18.5.46 Outdoor Defrost Temperature Sensor Abnormality (F43)

**Malfunction Decision Conditions:**

During startup and operation of cooling and heating, the temperatures detected by the outdoor defrost temperature sensor are used to determine sensor error.

**Malfunction Caused:**

1 Faulty connector connection.
2 Faulty sensor.
3 Faulty outdoor unit PCB (main).

**Abnormality Judgment:**

Continue for 5 seconds.

## Troubleshooting:

**Caution** For safety reason and to prevent component breakdown, always switch off the power before remove and connect the component.

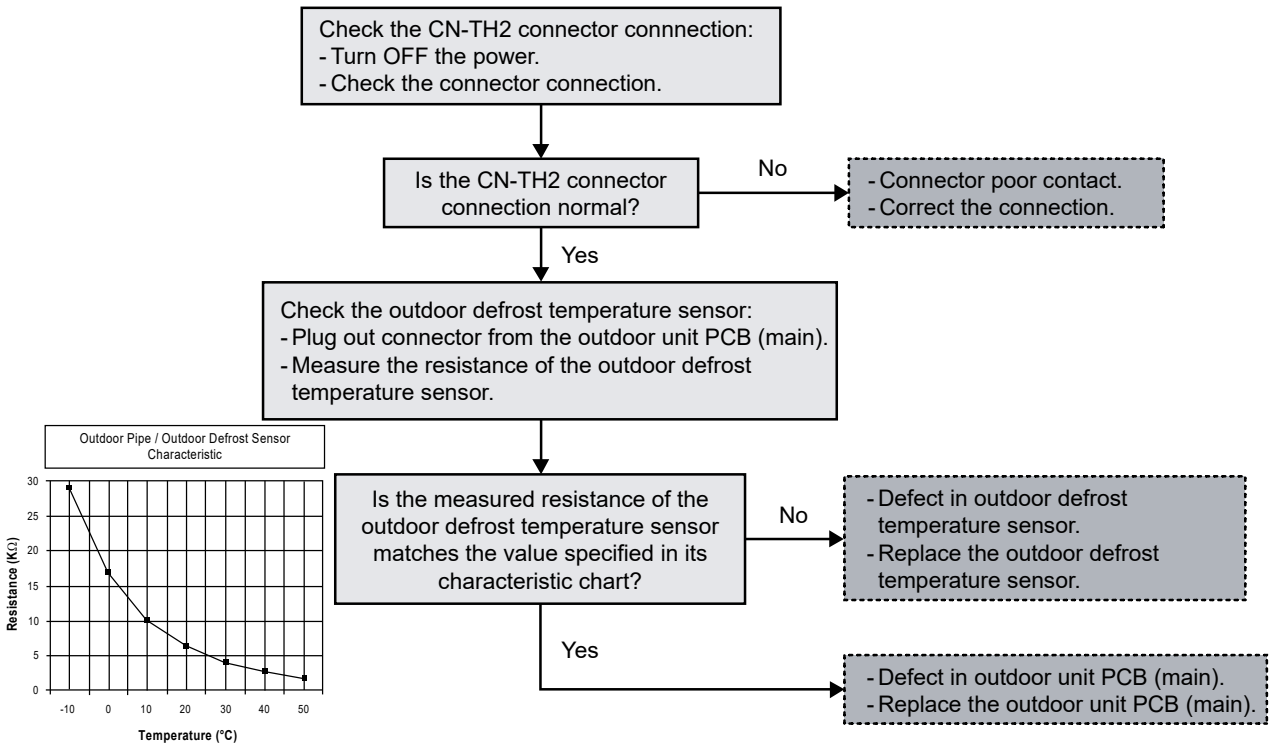

## 18.5.47 Indoor Water Outlet Temperature Sensor Abnormality (F45)

**Malfunction Decision Conditions:**

During startup and operation of cooling and heating, the temperatures detected by the indoor water outlet temperature sensor are used to determine sensor errors.

**Malfunction Caused:**

1 Faulty connector connection.
2 Faulty sensor.
3 Faulty indoor unit PCB (main).

**Abnormality Judgment:**

Continue for 5 seconds.

## Troubleshooting:

**Caution** For safety reason and to prevent component breakdown, always switch off the power before remove and connect the component.

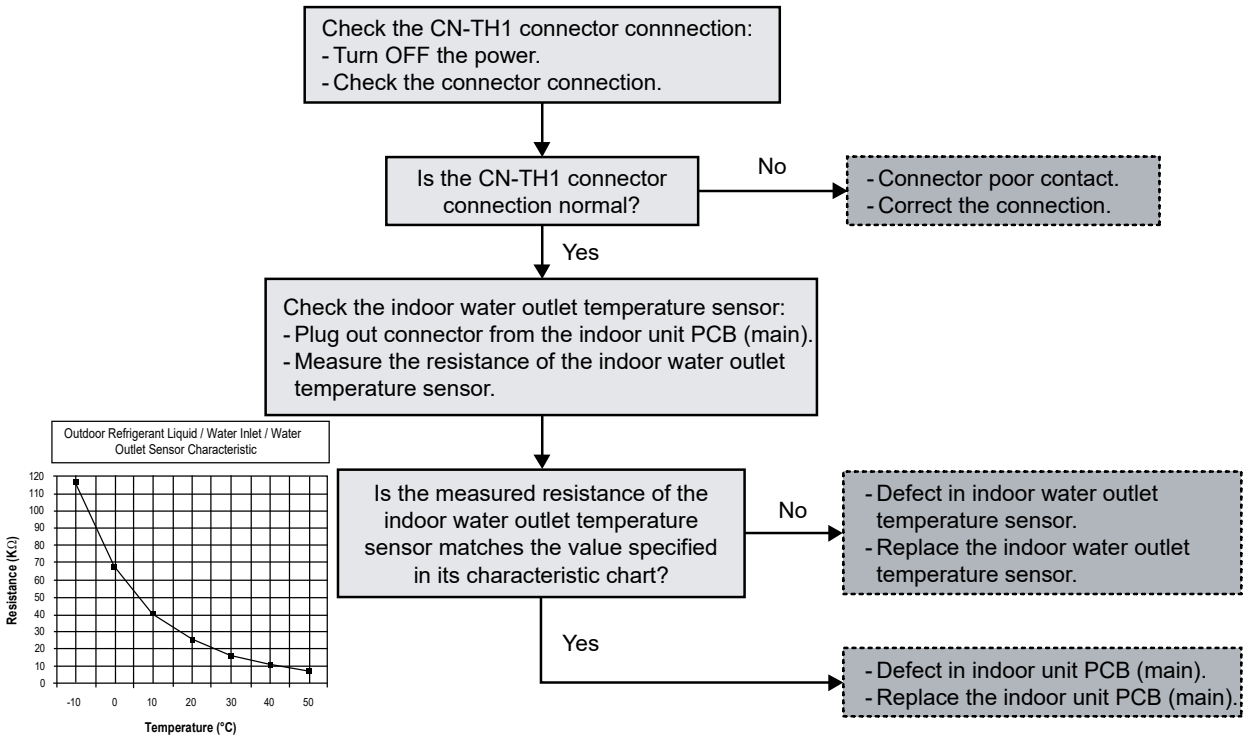

## 18.5.48 Outdoor Current Transformer Open Circuit (F46)

**Malfunction Decision Conditions:**

A current transformer (CT) open circuit is detected by checking the compressor running frequency ( ⩾ rated frequency) and CT detected input current (< 0.65 A) for continuously 20 seconds.

**Malfunction Caused:**

1 CT defective.
2 Faulty outdoor unit PCB (main).
3 Compressor defective (low compression).

**Abnormality Judgment:**

Continue 3 times in 20 minutes.

**Troubleshooting:** Caution

For safety reason and to prevent component breakdown, always switch off the power before remove and connect the component.

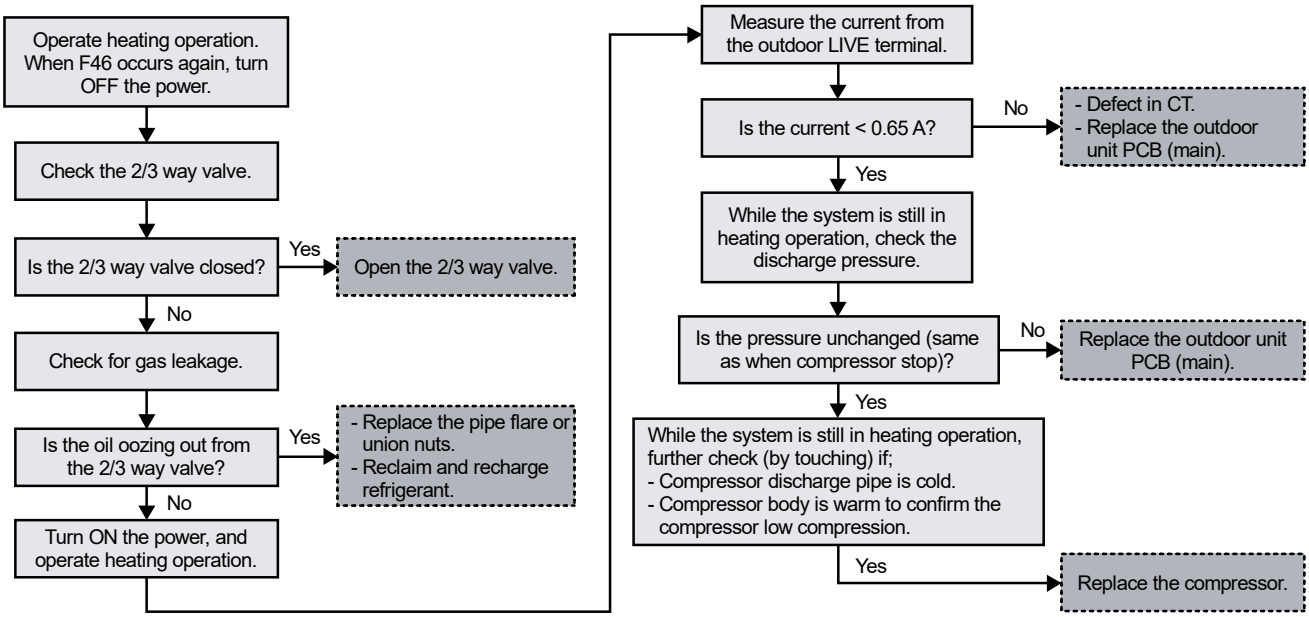

## 18.5.49 Outdoor Bypass Outlet Temperature Sensor (F49)

**Malfunction Decision Conditions:**

During start up and operation of cooling and heating, the temperature detected by outdoor bypass sensor is used to determine sensor error.

**Malfunction Caused:**

1 Faulty connector connection
2 Faulty sensor
3 Faulty outdoor unit PCB (main)

**Abnormality Judgment:**

Continuous for 5 seconds

## Troubleshooting:

**Caution** For safety reason and to prevent component breakdown, always switch off the power before remove and connect the component.

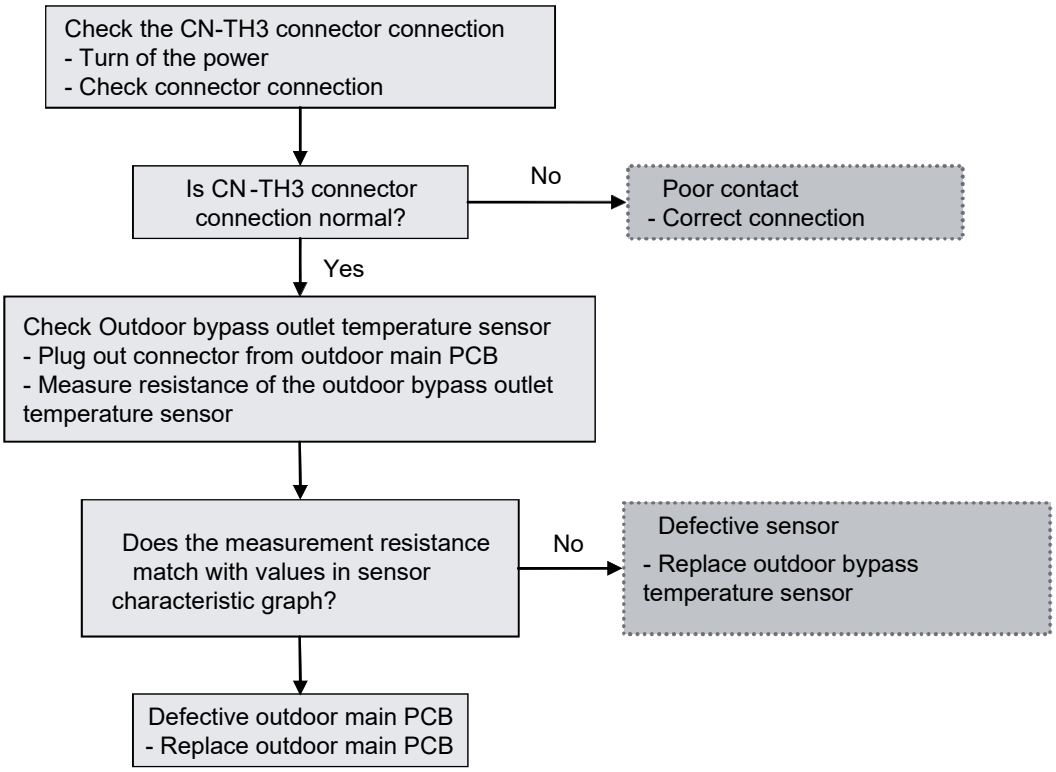


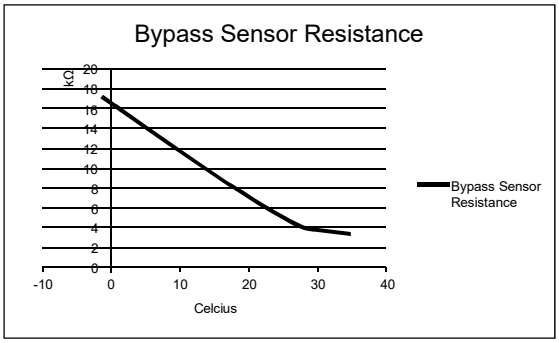

## 18.5.50 Outdoor Water Inlet Temperature Sensor 2 Abnormality (F50)

**Malfunction Decision Conditions:**

During startup and operation of cooling and heating, the temperatures detected by the outdoor water inlet temperature sensor 2 are used to determine sensor error.

**Malfunction Caused:**

1 Faulty connector connection.
2 Faulty sensor.
3 Faulty indoor unit PCB.

**Abnormality Judgment:**

Continue for 5 seconds.

**Troubleshooting:** Caution

For safety reason and to prevent component breakdown, always switch off the power before remove and connect the component.

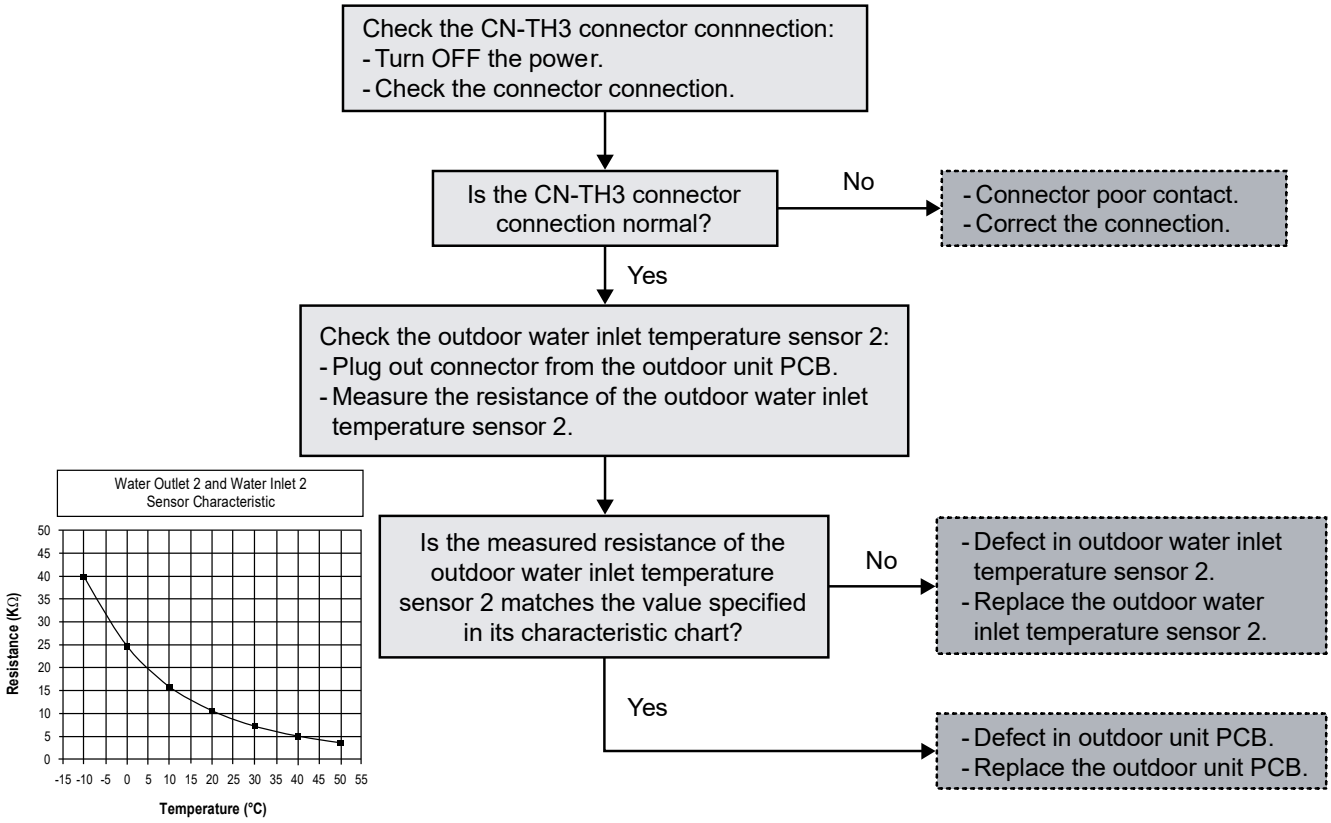

## 18.5.51 Main Expansion Valve Overcurrent Protection (F53)

**Malfunction Decision Conditions:**

During operation of cooling and heating, the current flowing through the coil of the main expansion valve is used for abnormality judgment.

**Malfunction Caused:**

1 Faulty connector connection.
2 Faulty the coil of the main expansion valve.
3 Faulty outdoor unit PCB (main).

**Abnormality Judgment:**

40 detections within 20 minutes.

**Troubleshooting:** Caution

For safety reason and to prevent component breakdown, always switch off the power before remove and connect the component.

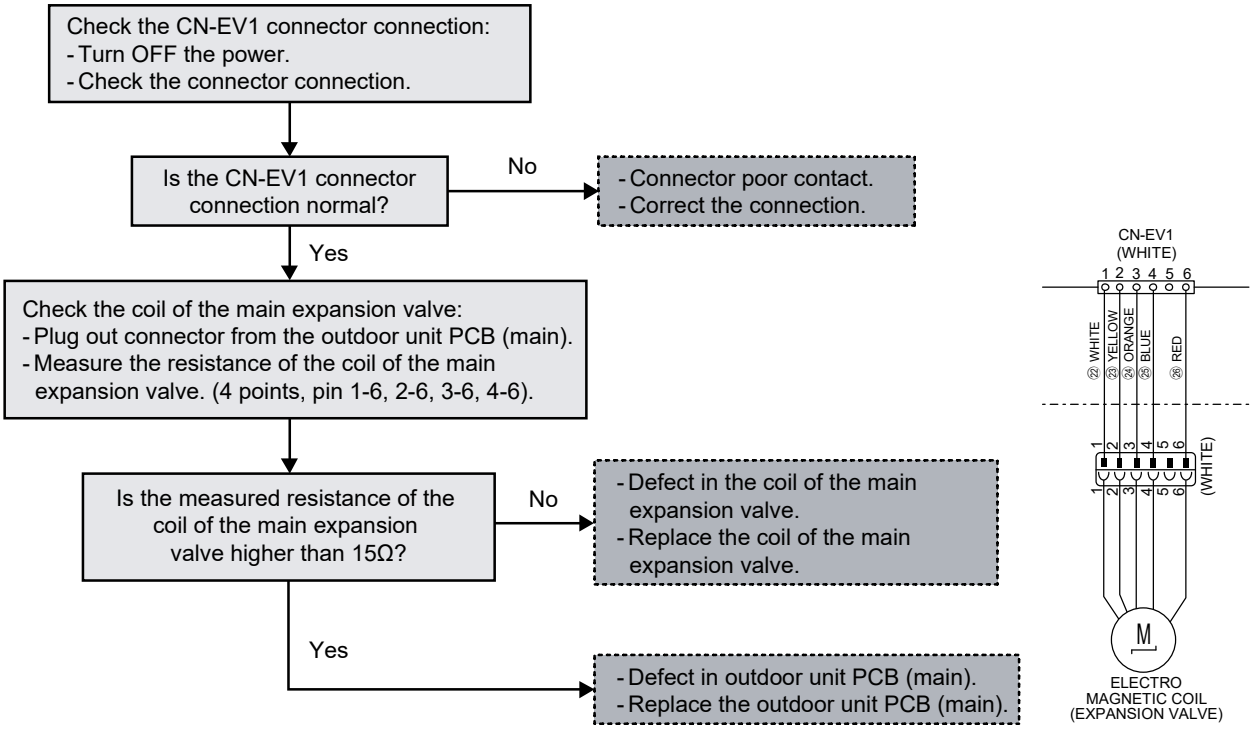

# 19. Disassembly and Assembly Instructions

> ⚠ **WARNING**
>
> High Voltage are generated in the electrical parts area by the capacitor. Ensure that the capacitor has discharged sufficiently before proceeding with repair work. Failure to heed this caution may result in electric shocks.

## *19.1 Indoor Unit*

### 19.1.1 To Remove Front Plate

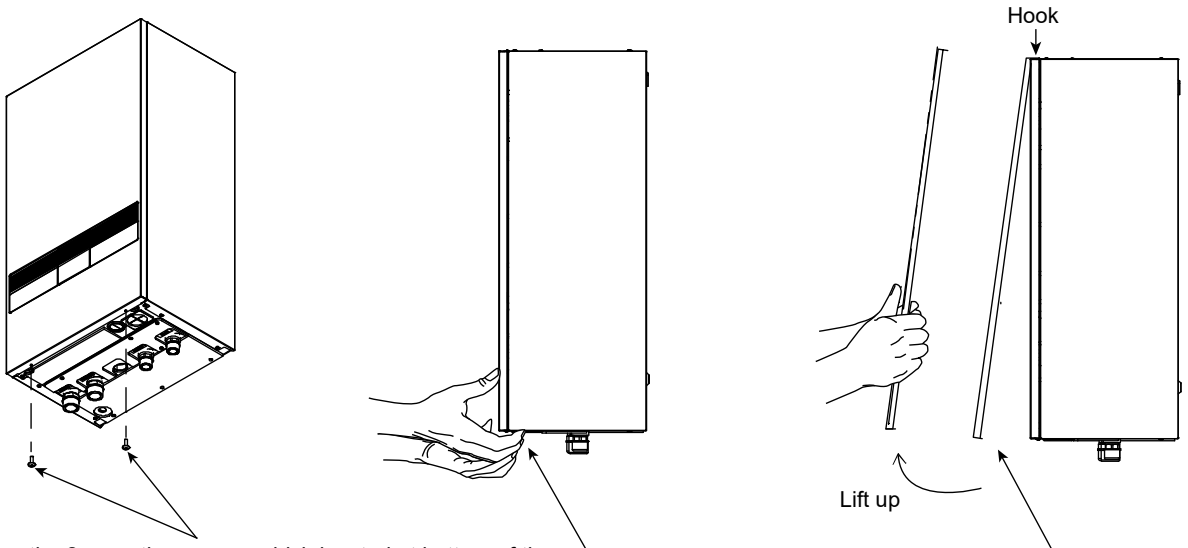


1. Remove the 2 mounting screws which located at bottom of the front plate.
2. Gently pull the lower section of the front plate towards you to remove the front plate from left and right hooks.
3. Hold the left edge and right edge of front plate to lift up front plate from hooks.

### 19.1.2 To Open Control Board Cover

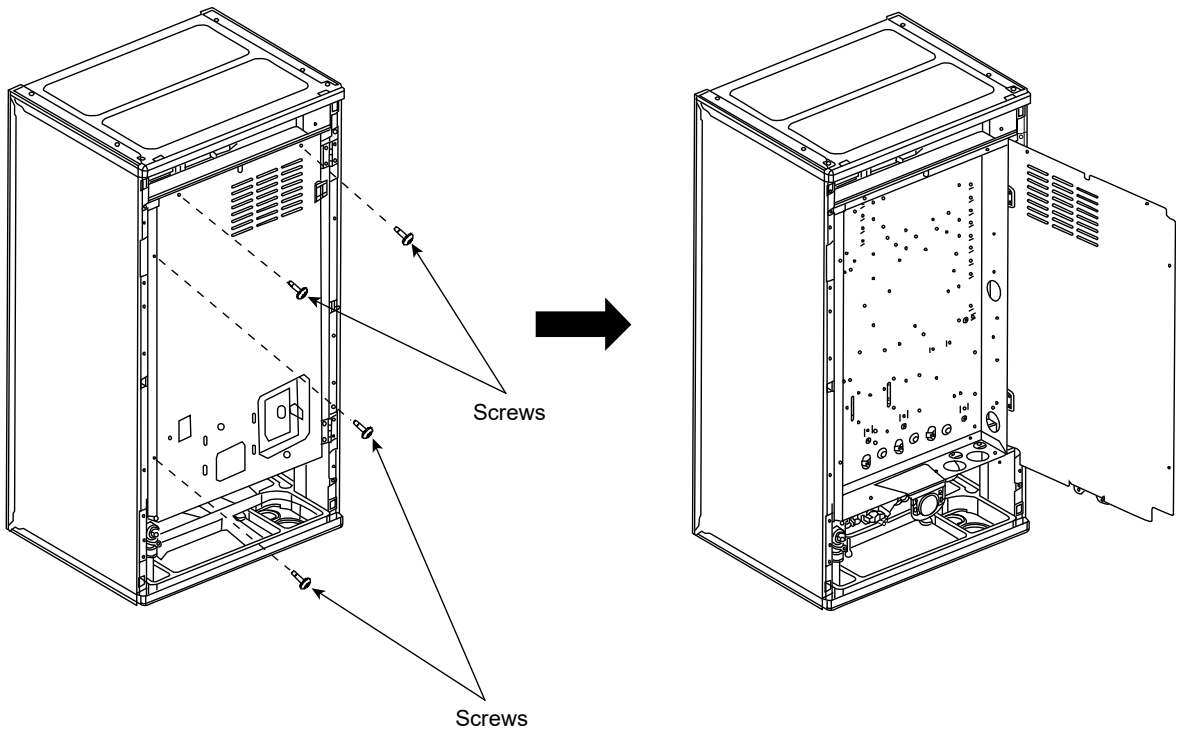


1. Remove 4 screws from the Control Board Cover.

## 19.1.3 To Remove Control Panel

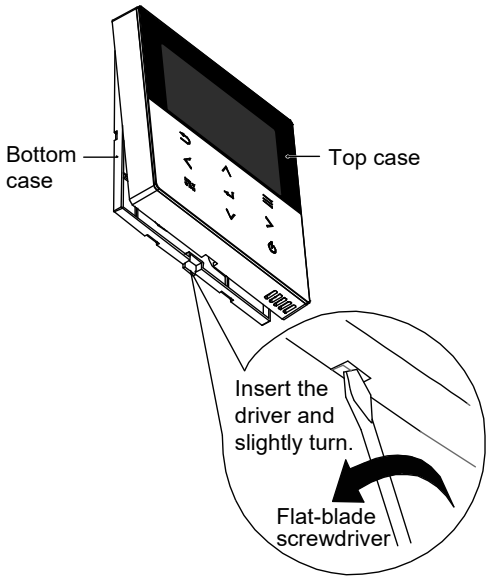


1. Remove the top case from the bottom case.

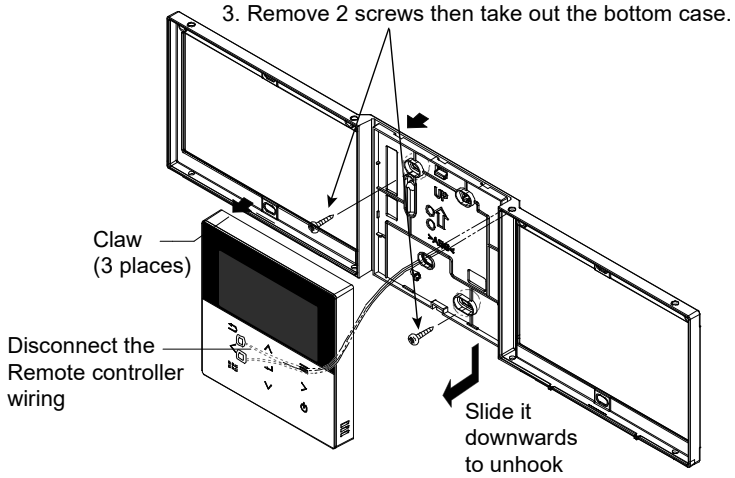


2. Disconnect the Remote Controller wiring.

## 19.1.4 To Remove RCCB

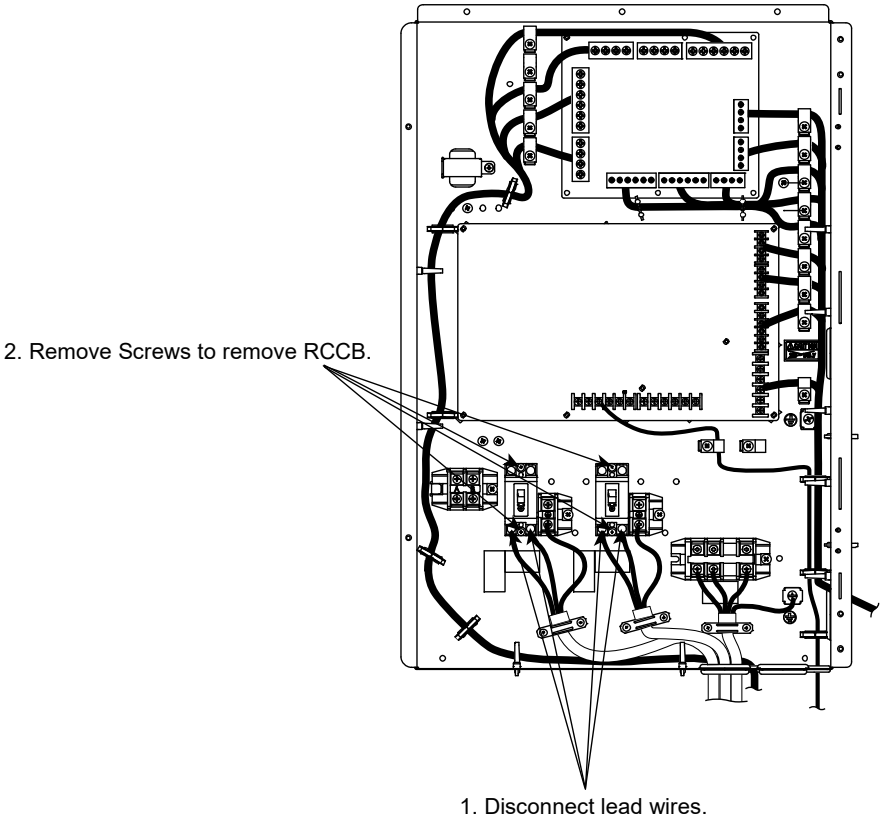

### 19.1.5 To Remove Transformer and Electronic Controller Board

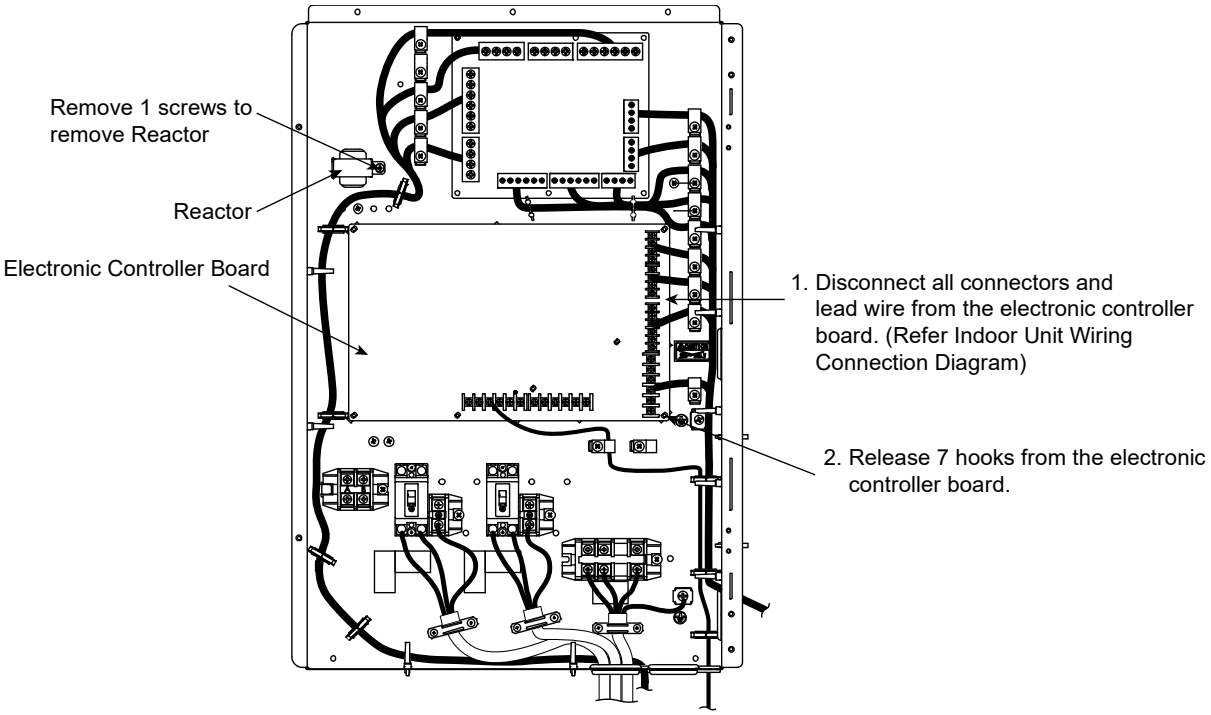


### 19.1.6 To Open Control Board

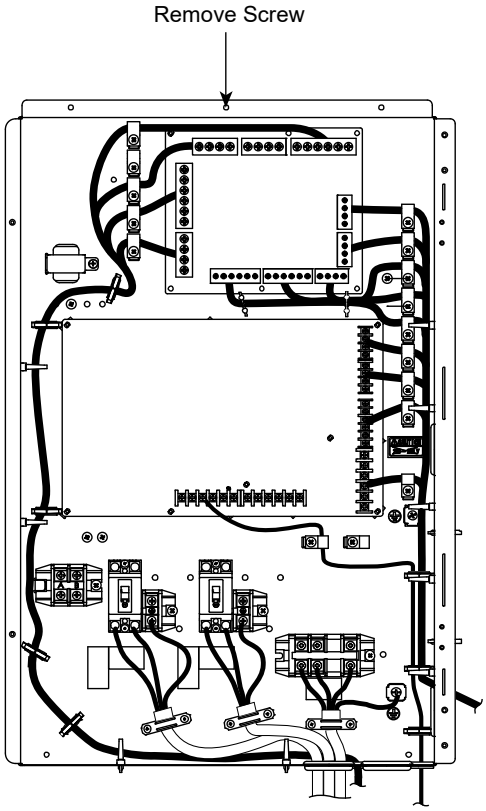

### 19.1.7 To Remove Flow Sensor

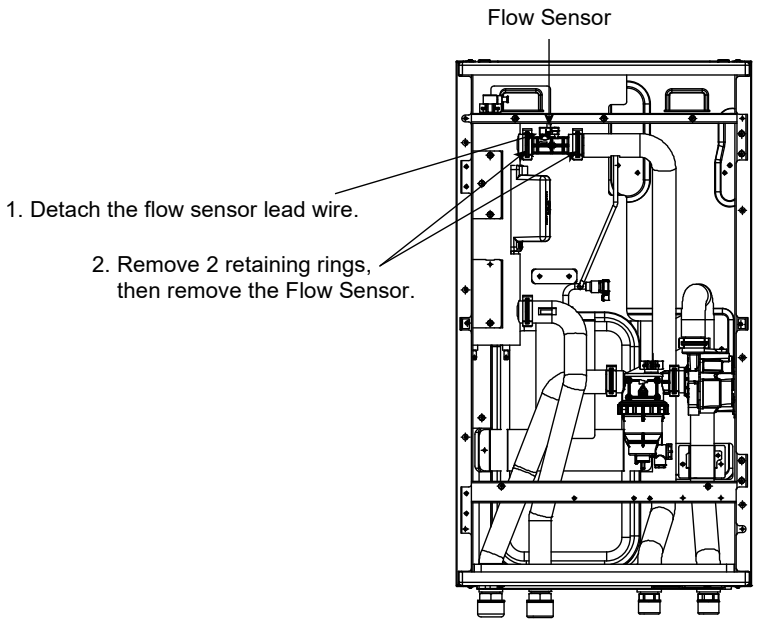


⚠ When reinstall Flow Switch, ensure the arrow on the flow switch is parallel with the pipe shaft and is facing in the direction of flow.

During reinstall Flow Sensor

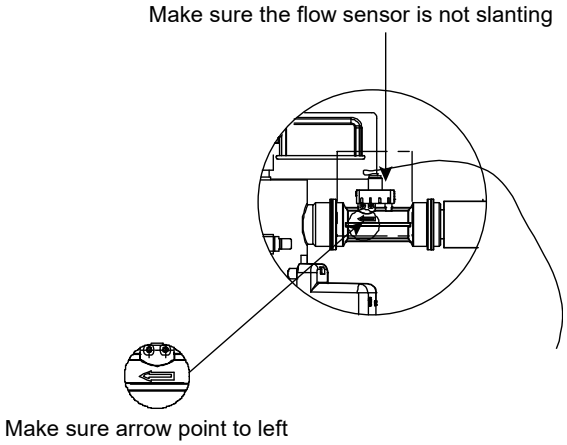

## 19.1.8 To Remove Water Pump and Bottle Complete

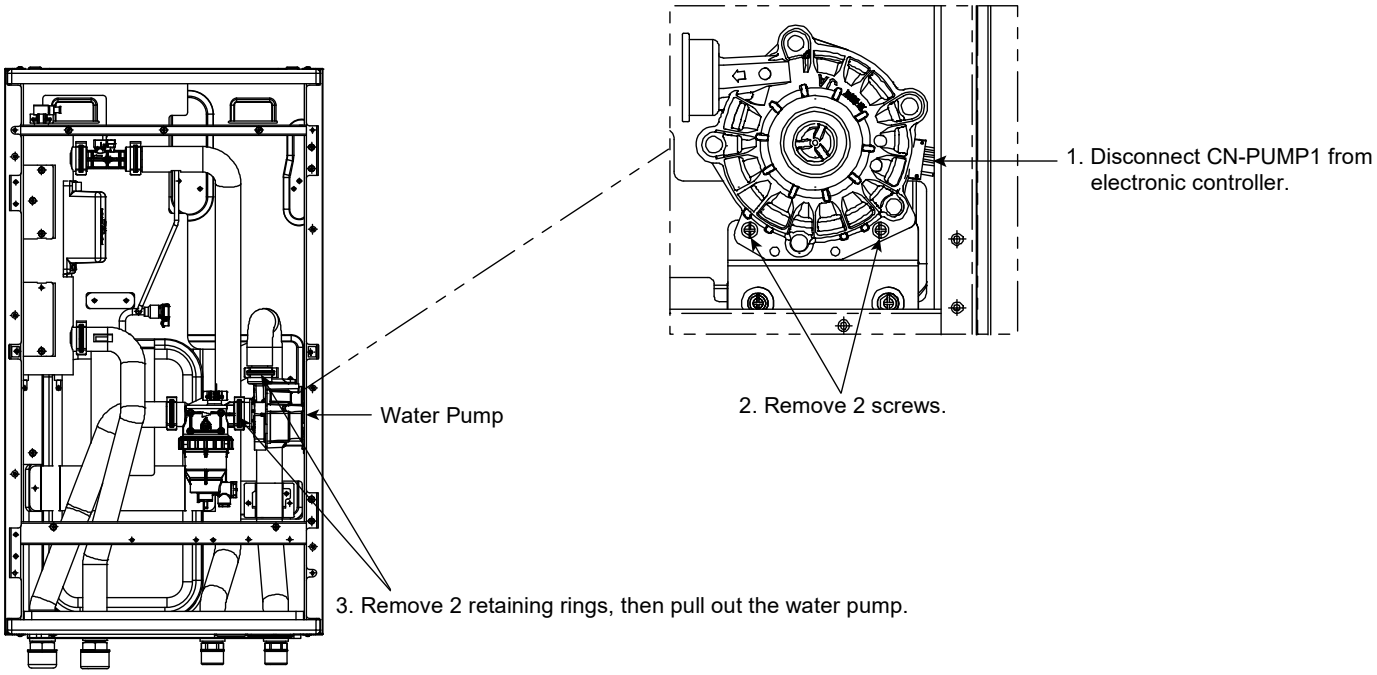


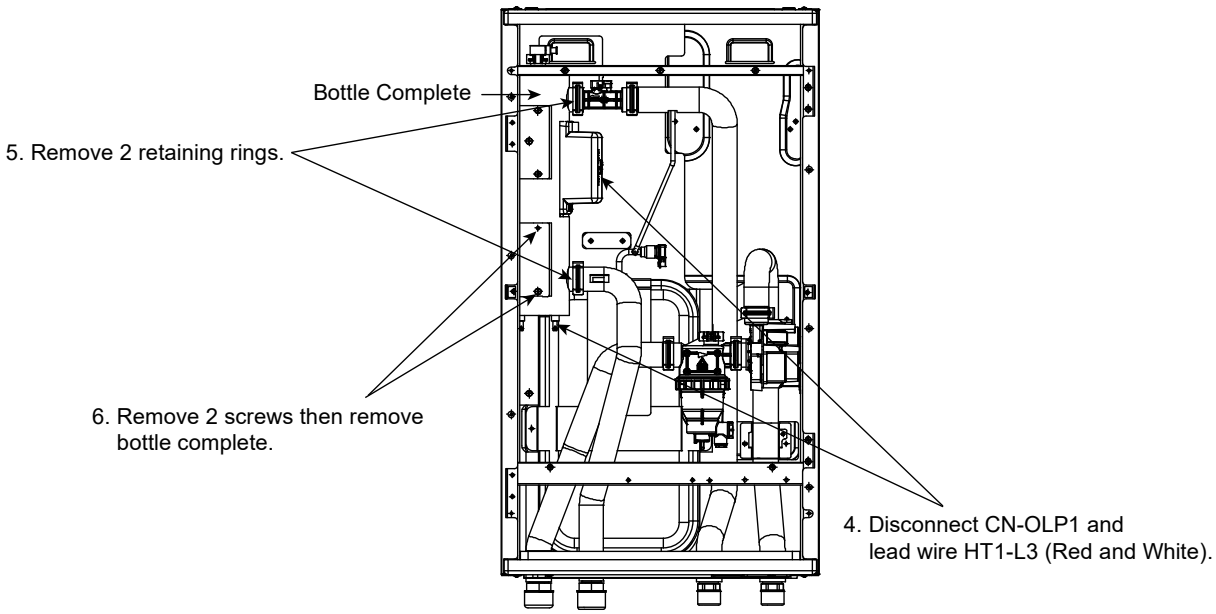

### 19.1.9 To Remove Water Filter

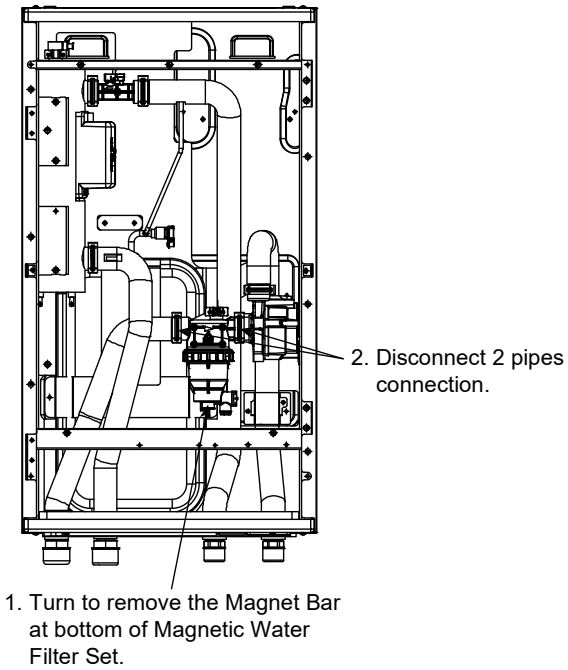

| | |
|---|---|
| **WARNING** | This symbol shows that this equipment uses a flammable refrigerant with safety A3 group per ISO 817. If the refrigerant is leaked, together with an external ignition source, there is a possibility of fire / explosion. |

- If you are working on the R290 product, before starting work and when entering the service area, always turn ON the combustible gas leak detector to ensure there is no leakage.
- Keep all ignition sources away from the product. In particular, open flames, hot surfaces, electrical devices that are not free from electrical sources, static discharges.
- Ensure the servicing area is well ventilated.
- Ensure all the serving tools and equipment complied with ATEX (Atmosphere Explosible) standard.
- Ensure the product is service by certified and authorized serviceman.
- Ensure to always have the approved fire extinguisher during servicing.
- Use a warning placard to ensure that unauthorized personnel cannot enter the protective zone.

## *19.2 Outdoor Unit*

### 19.2.1 Electronic Controller Removal Procedures

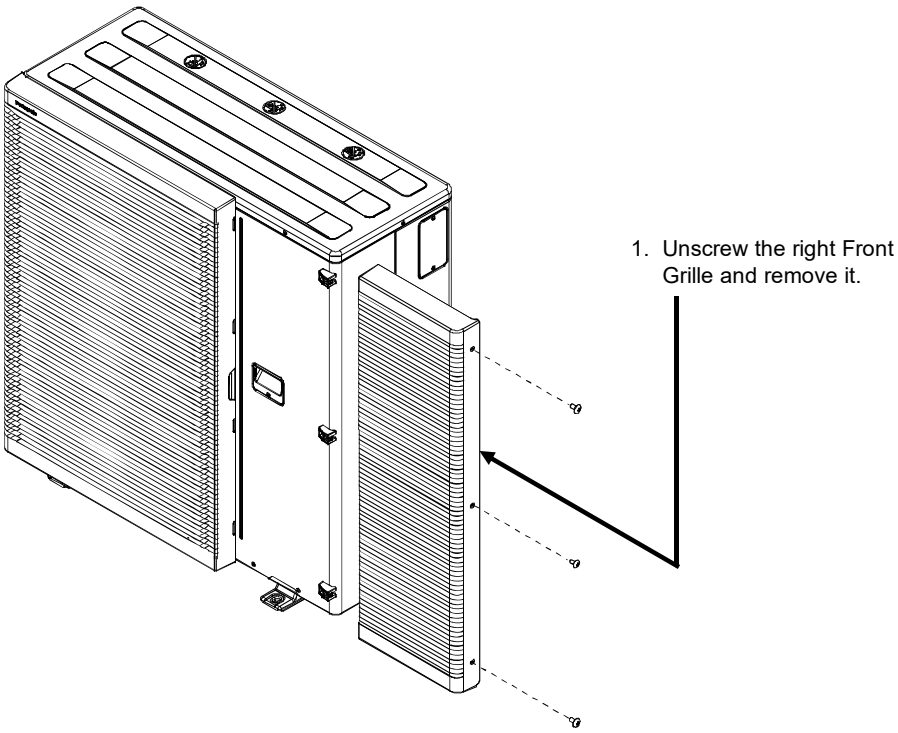

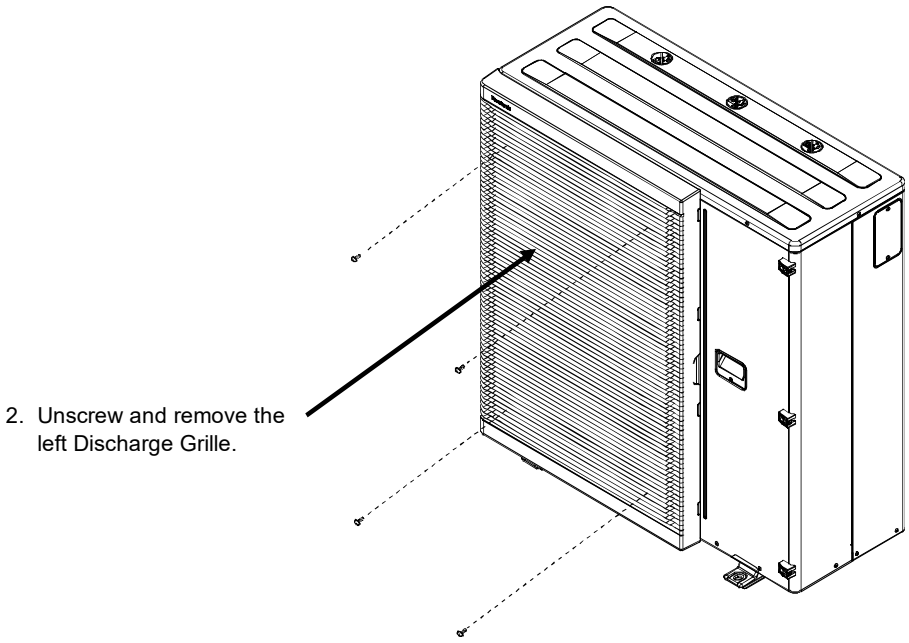
2. Unscrew and remove the left Discharge Grille.

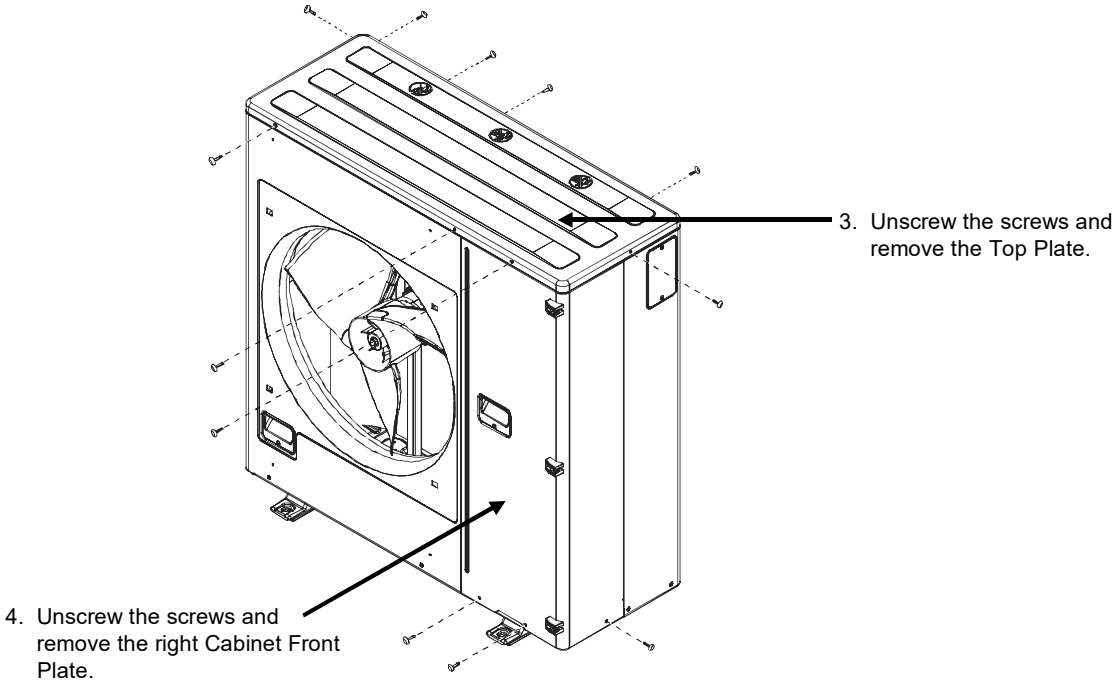
3. Unscrew the screws and remove the Top Plate.
4. Unscrew the screws and remove the right Cabinet Front Plate.

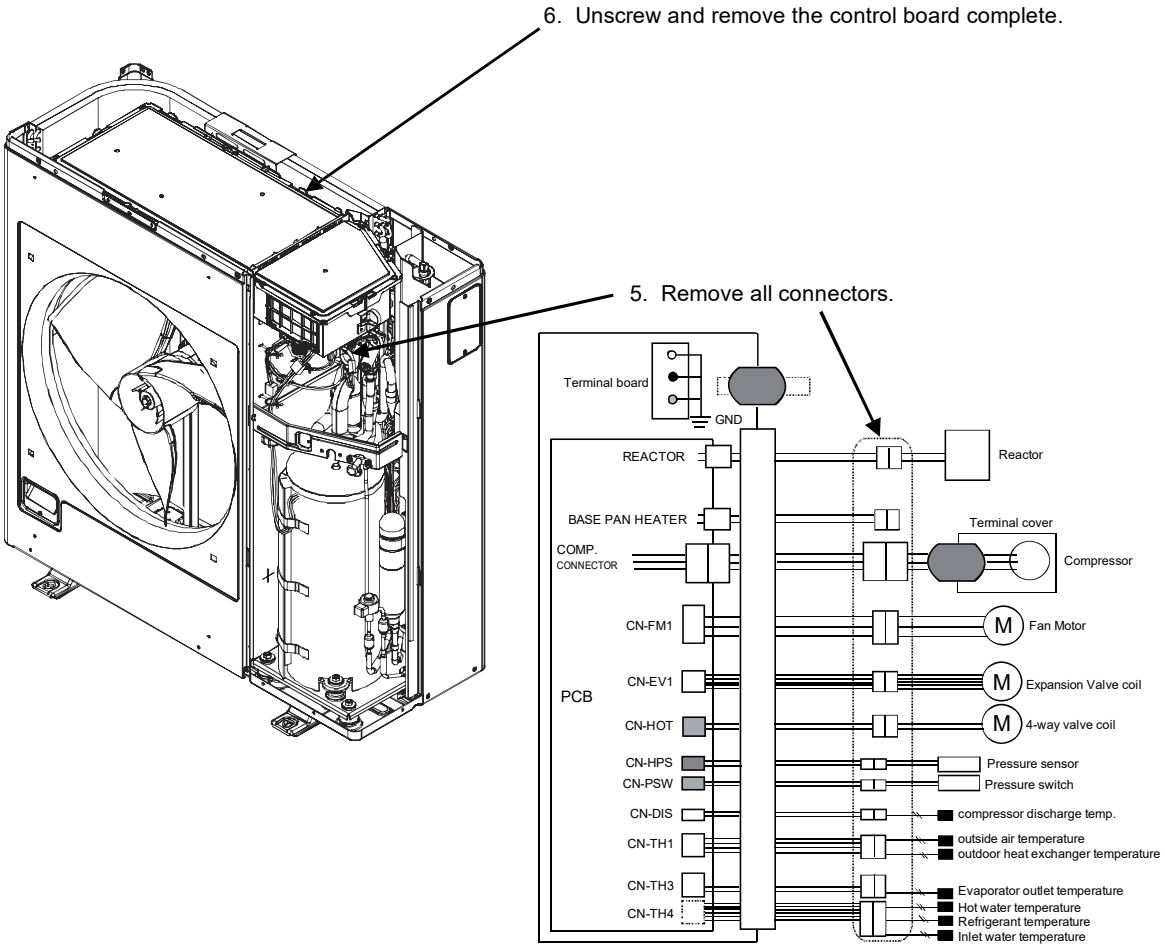
6. Unscrew and remove the control board complete.
5. Remove all connectors.
Terminal board
GND
REACTOR
BASE PAN HEATER
COMP.
CONNECTOR
CN-FM1
CN-EV1
PCB
CN-HOT
CN-HPS
CN-PSW
CN-DIS
CN-TH1
CN-TH3
CN-TH4
Reactor
Terminal cover
Compressor
M
Fan Motor
M
Expansion Valve coil
M
4-way valve coil
Pressure sensor
Pressure switch
compressor discharge temp.
outside air temperature
outdoor heat exchanger temperature
Evaporator outlet temperature
Hot water temperature
Refrigerant temperature
Inlet water temperature

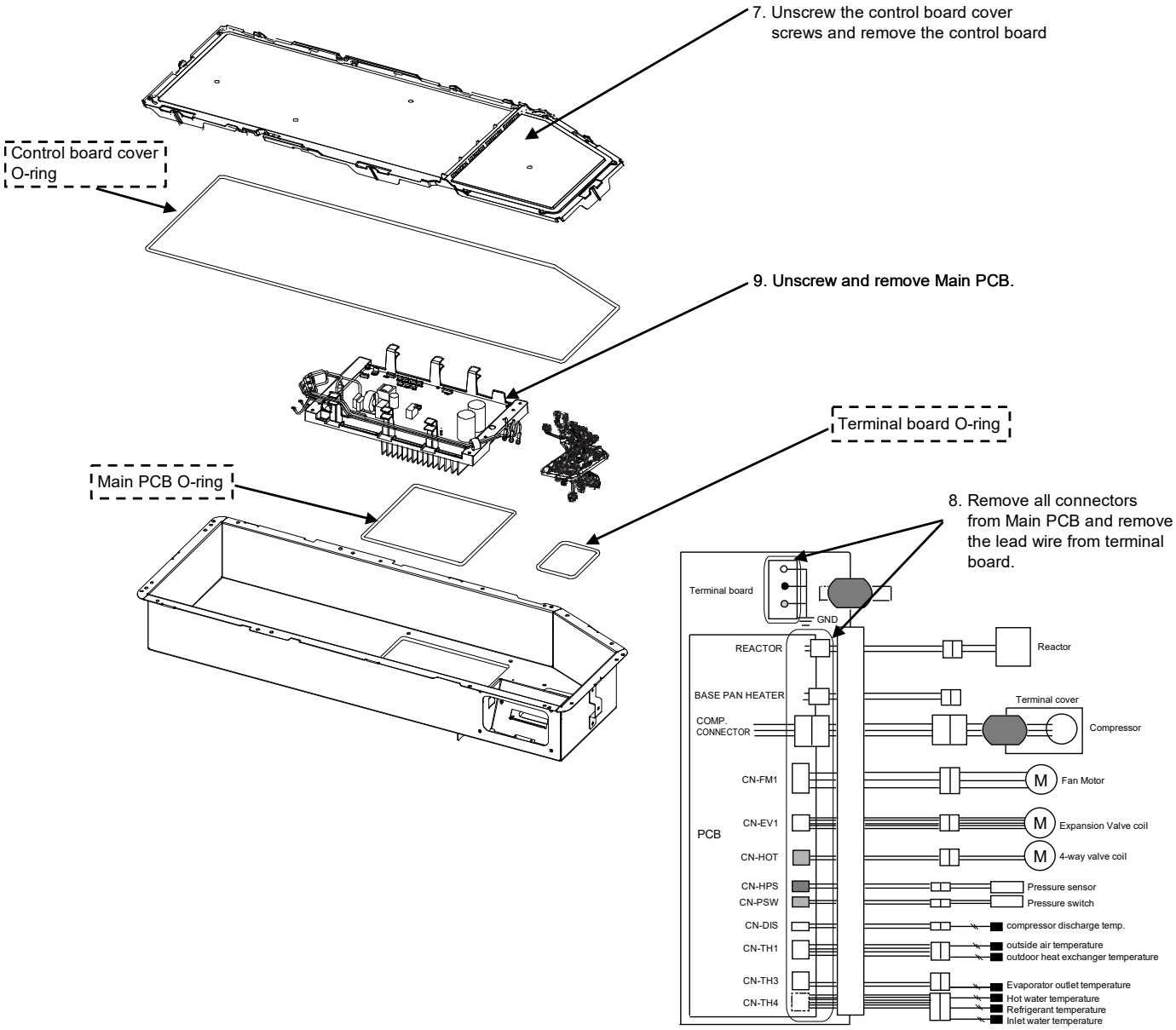


Note: During re-assemble the Main PCB, ensure to attach the O-ring properly to avoid gas leakage into the control board complete.

# 20. Technical Data

## *20.1 Operation Characteristics*

### 20.1.1 WH-WDG05LE5

**Heating Characteristics at Different Outdoor Air Temperature**

Condition
Outdoor air temperature : 7°C (DBT), 6°C (WBT)
Indoor water inlet temperature : 30°C
Indoor water outlet temperature : 25°C
Piping length : 5m

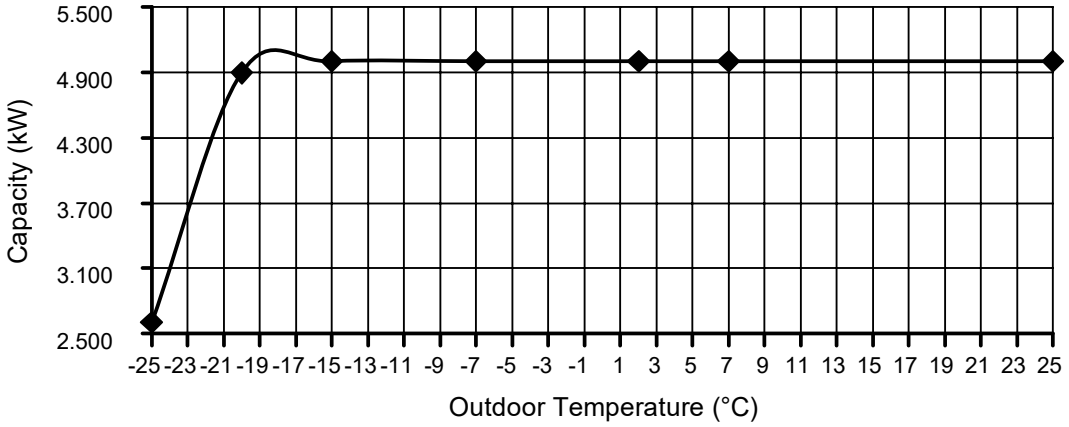


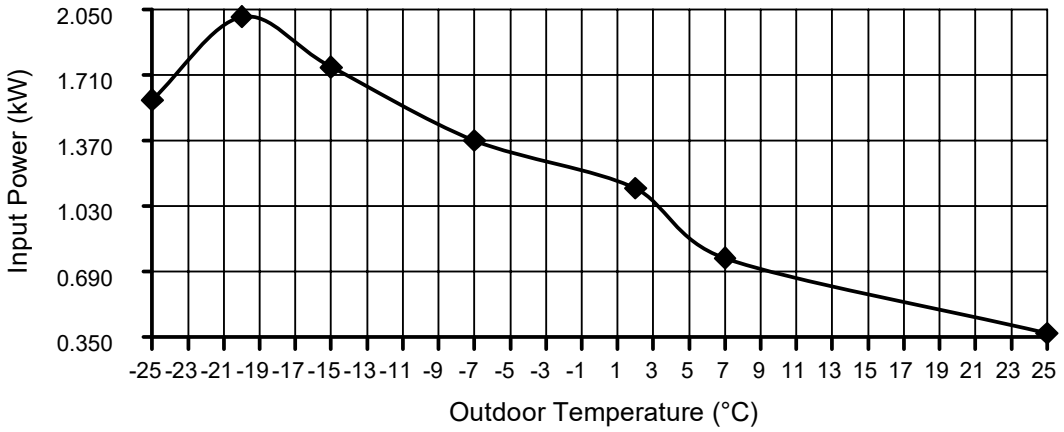


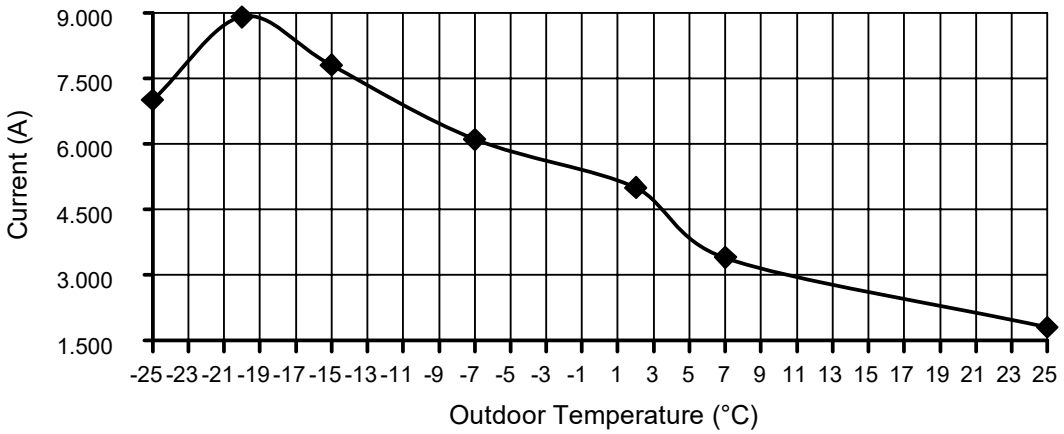

**Cooling Characteristics at Different Outdoor Air Temperature**

Condition
Outdoor air temperature : 35°C (DBT), -°C (WBT)
Indoor water inlet temperature : 12°C
Indoor water outlet temperature : 7°C
Piping length : 5m

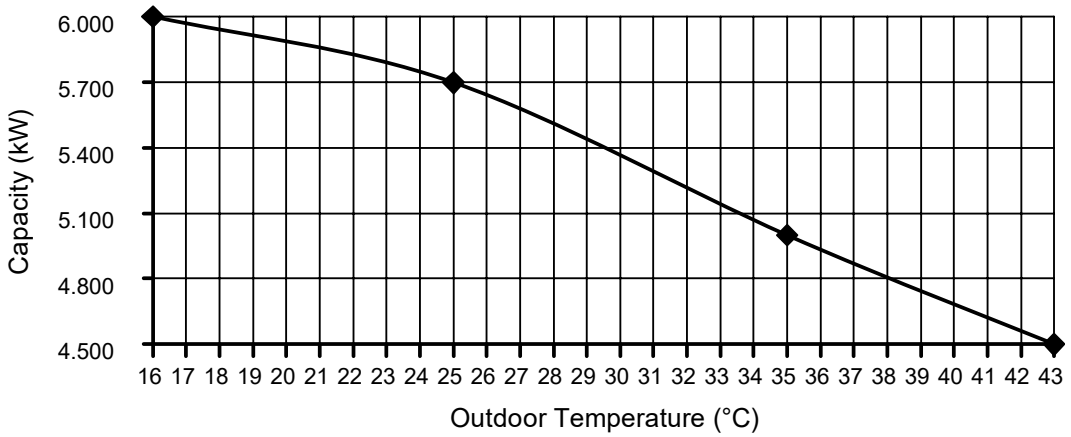


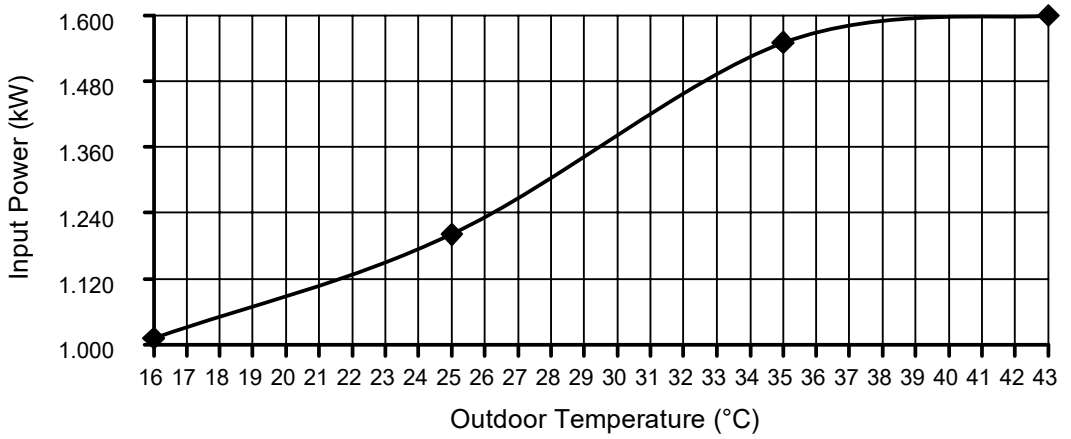


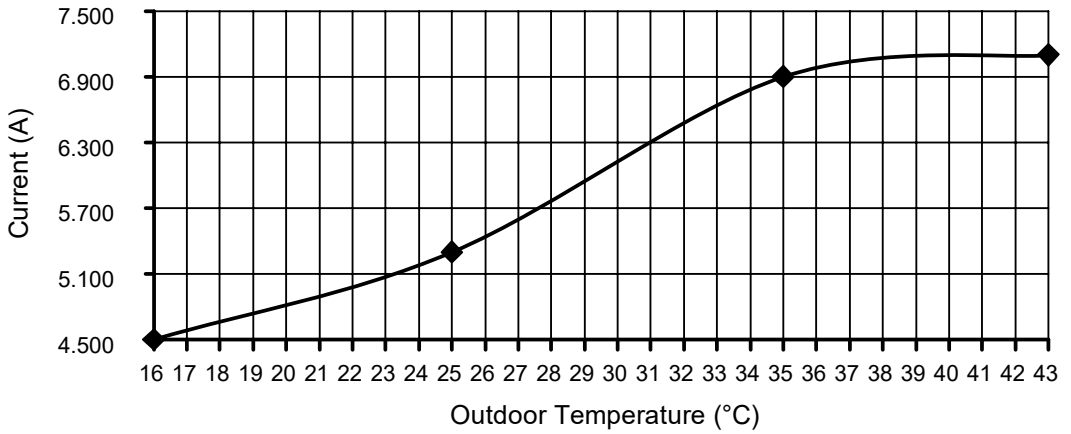

**Cooling Characteristics at Different Outdoor Air Temperature**

Condition
Outdoor air temperature : 35°C (DBT), -°C (WBT)
Indoor water inlet temperature : 19°C
Indoor water outlet temperature : 14°C
Piping length : 5m

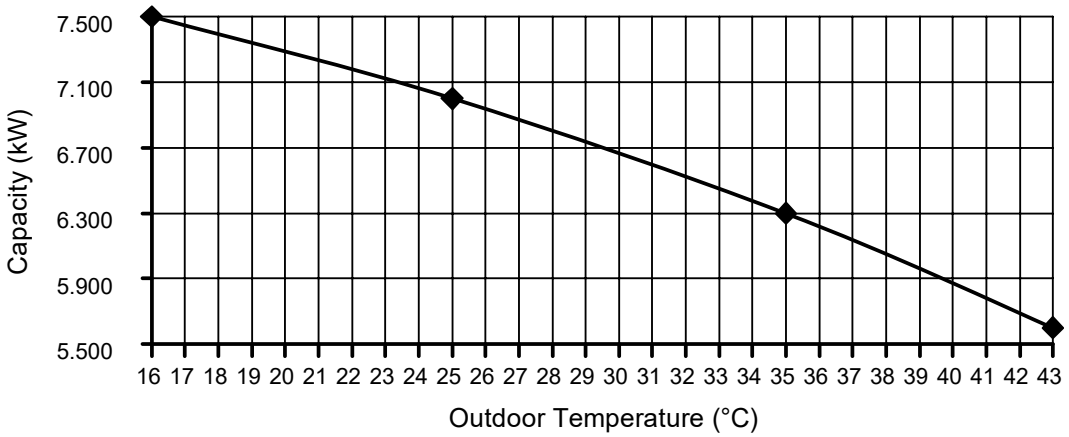


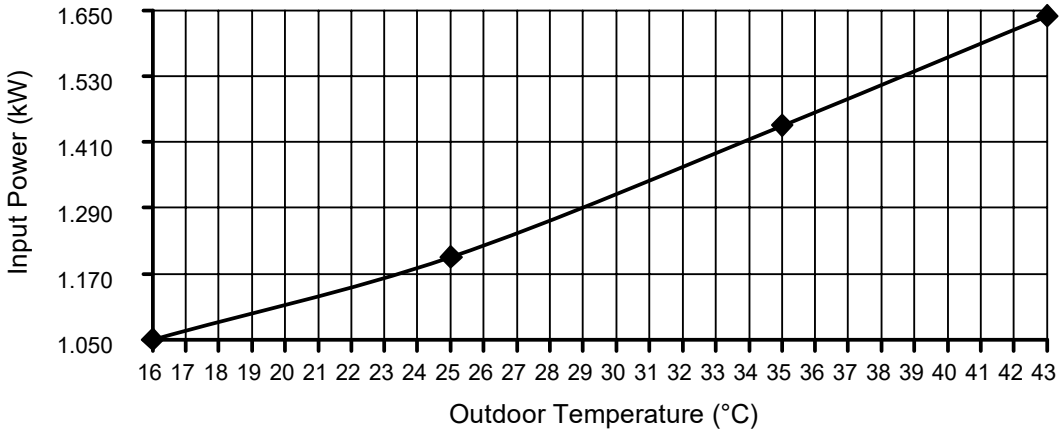


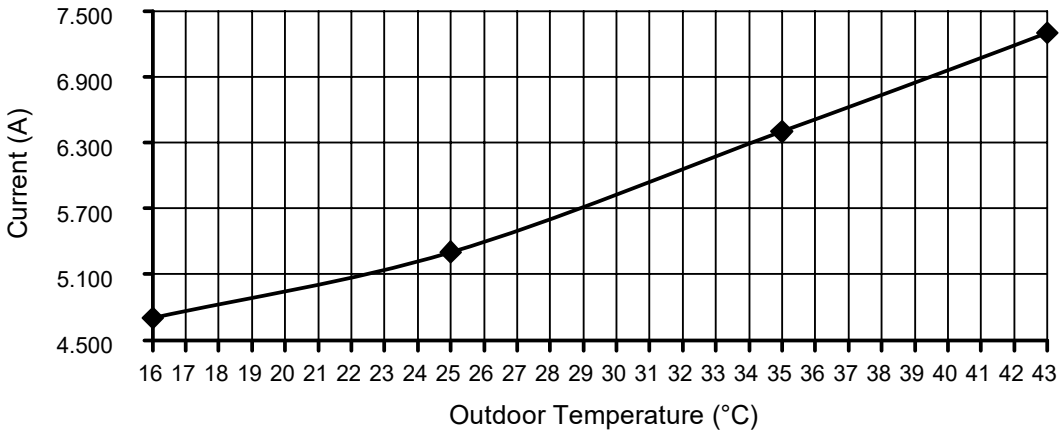

**Cooling Characteristics at Different Outdoor Air Temperature**

Condition
Outdoor air temperature : 35°C (DBT), -°C (WBT)
Indoor water inlet temperature : 23°C
Indoor water outlet temperature : 18°C
Piping length : 5m

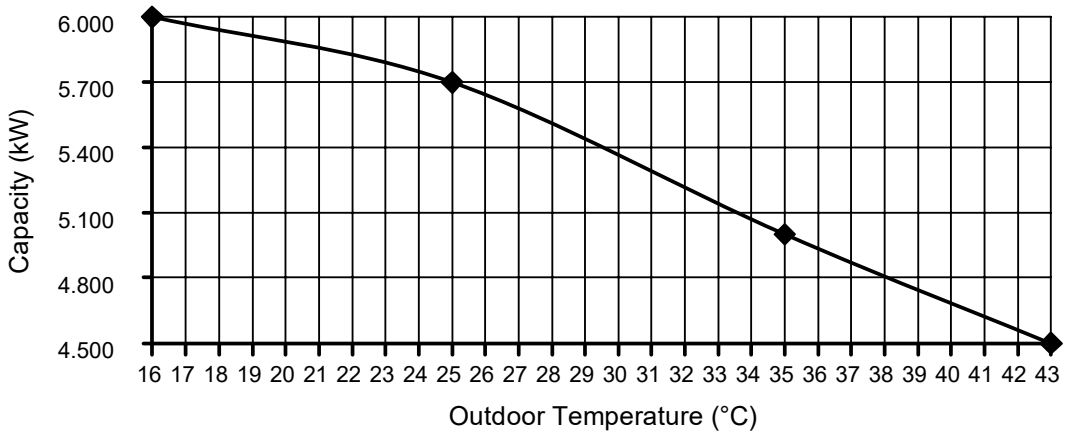


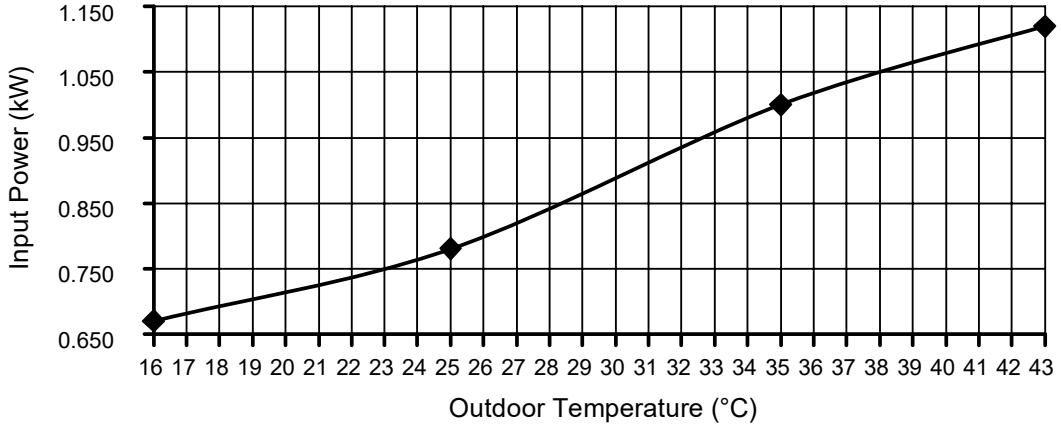


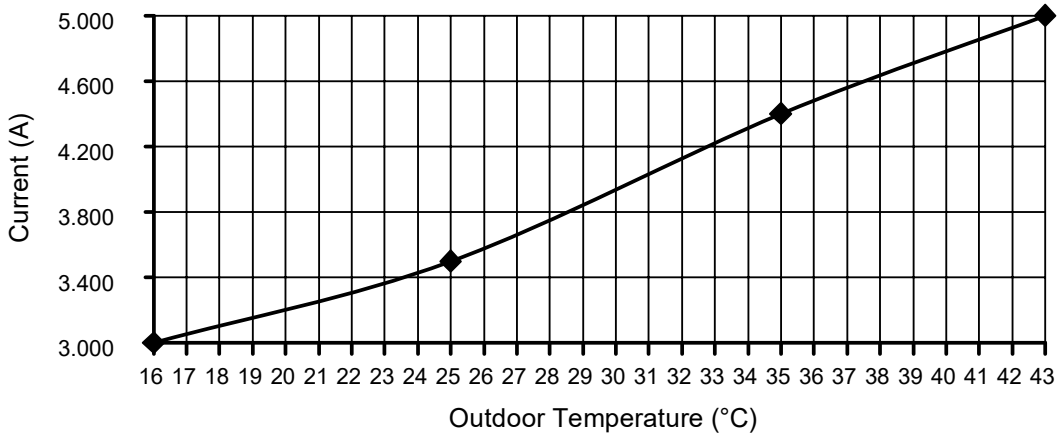

## 20.1.2 WH-WDG07LE5

**Heating Characteristics at Different Outdoor Air Temperature**

Condition
Outdoor air temperature : 7°C (DBT), 6°C (WBT)
Indoor water inlet temperature : 30°C
Indoor water outlet temperature : 25°C
Piping length : 5m

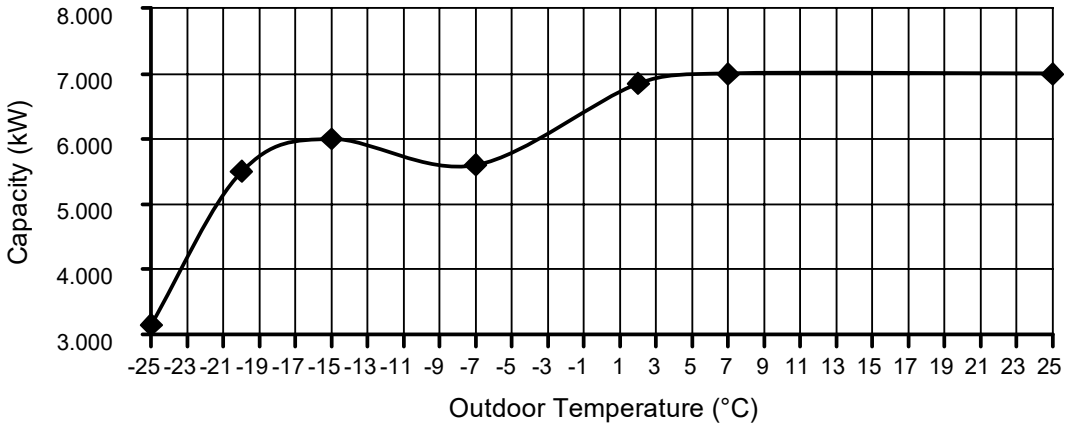


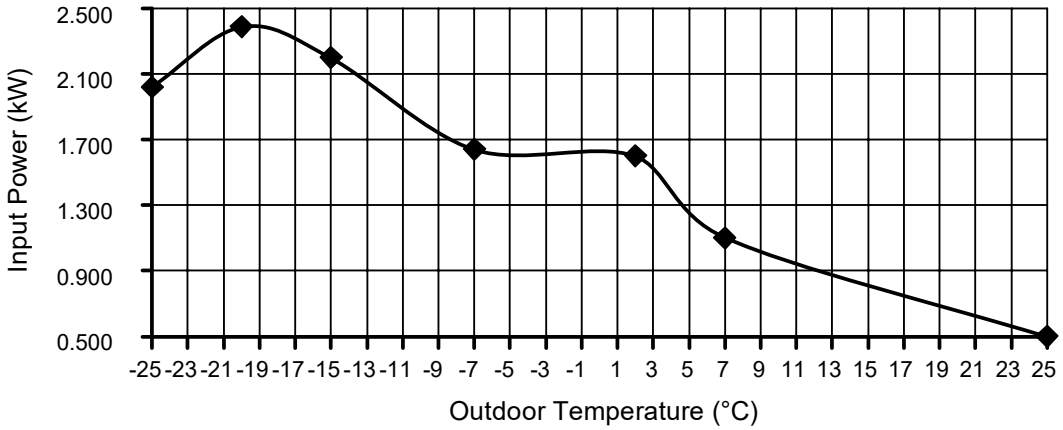


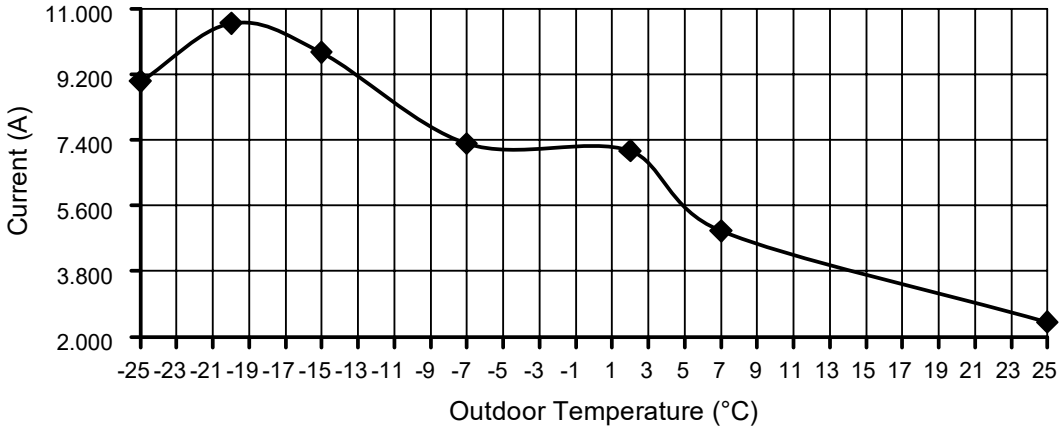

**Cooling Characteristics at Different Outdoor Air Temperature**

Condition
Outdoor air temperature : 35°C (DBT), -°C (WBT)
Indoor water inlet temperature : 12°C
Indoor water outlet temperature : 7°C
Piping length : 5m

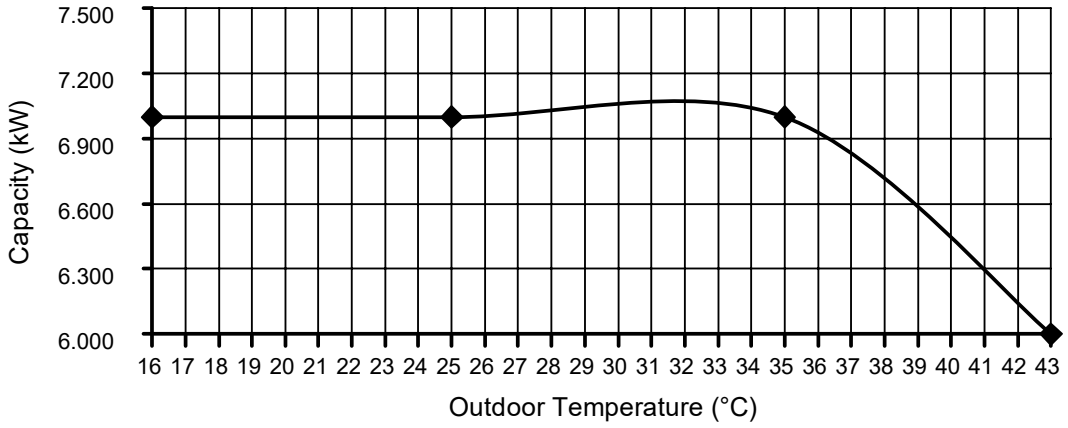


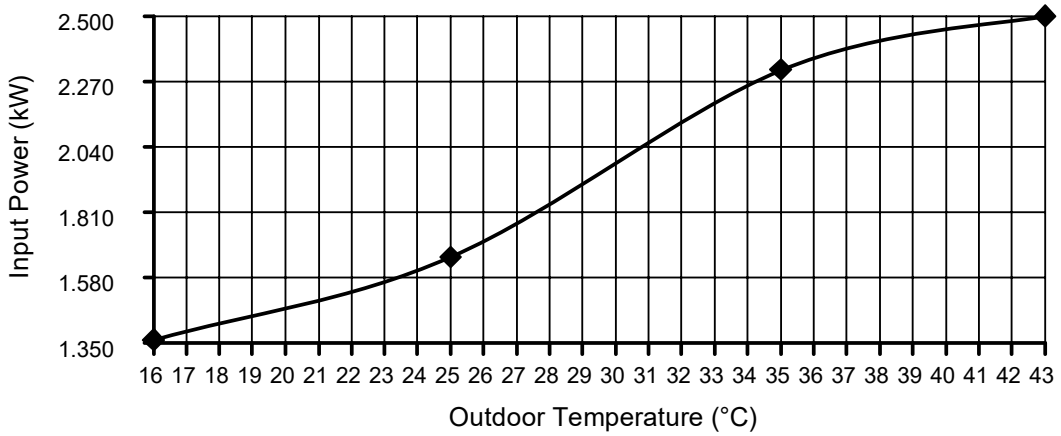


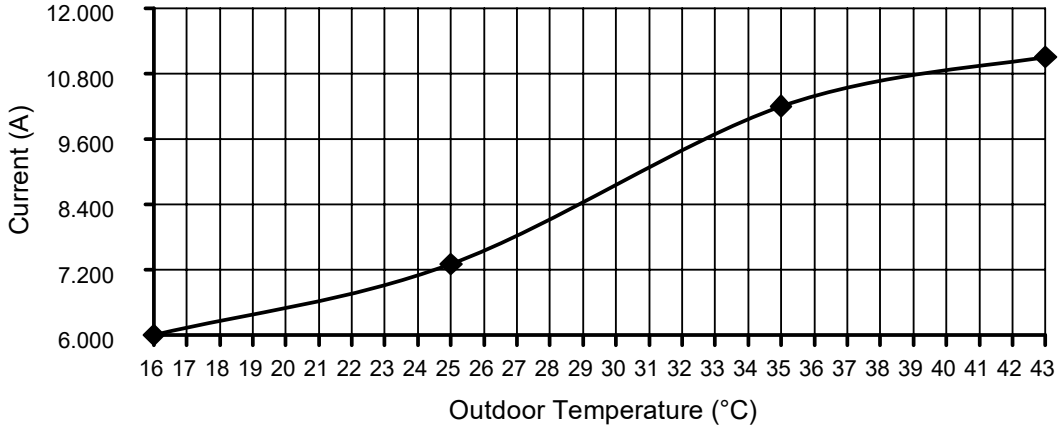

**Cooling Characteristics at Different Outdoor Air Temperature**

Condition
Outdoor air temperature : 35°C (DBT), -°C (WBT)
Indoor water inlet temperature : 19°C
Indoor water outlet temperature : 14°C
Piping length : 5m

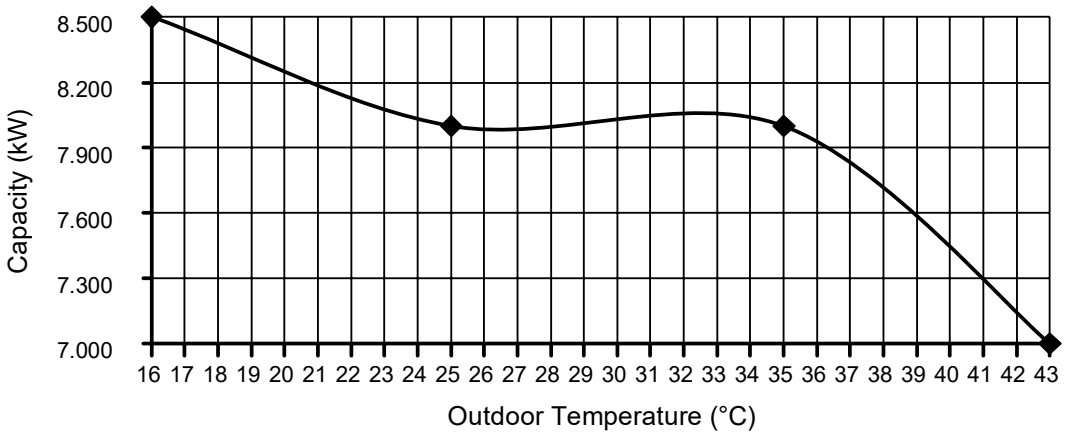


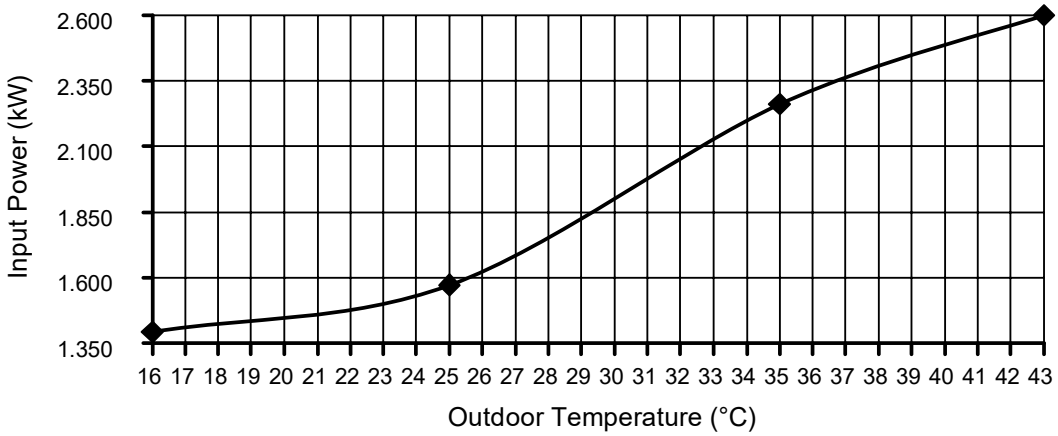


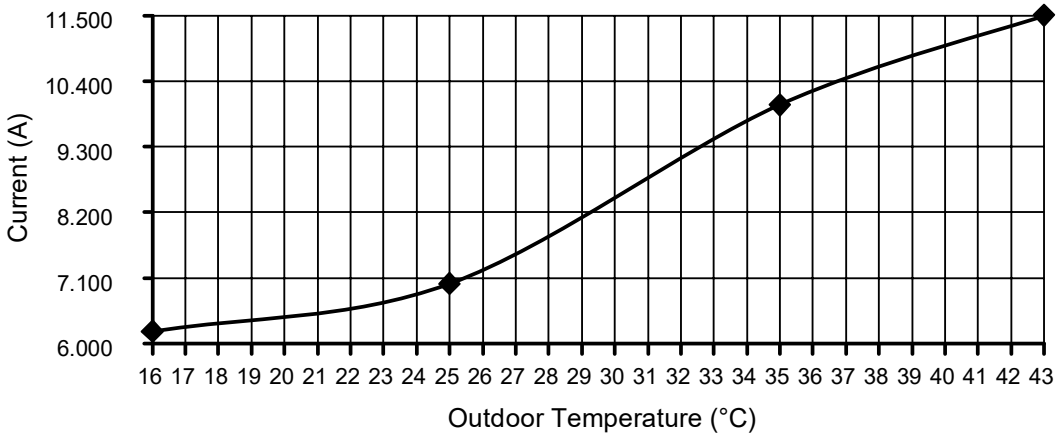

**Cooling Characteristics at Different Outdoor Air Temperature**

Condition
Outdoor air temperature : 35°C (DBT), -°C (WBT)
Indoor water inlet temperature : 23°C
Indoor water outlet temperature : 18°C
Piping length : 5m

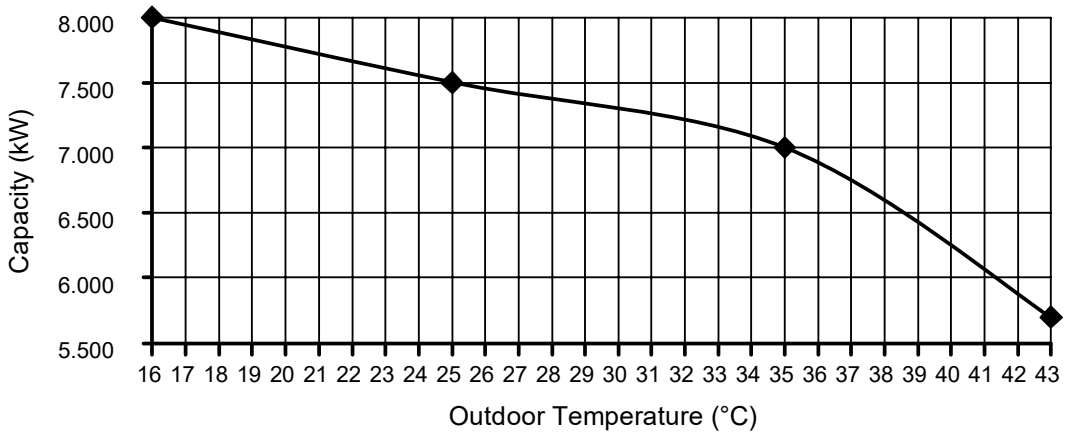


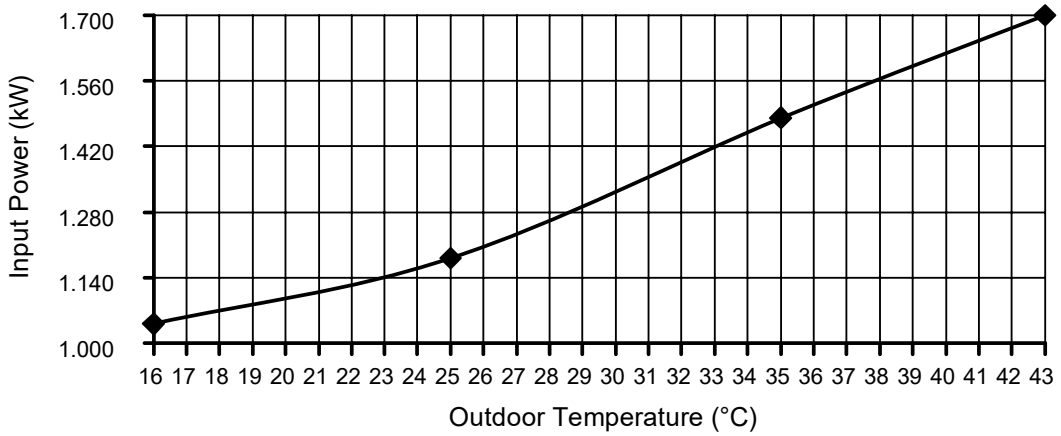


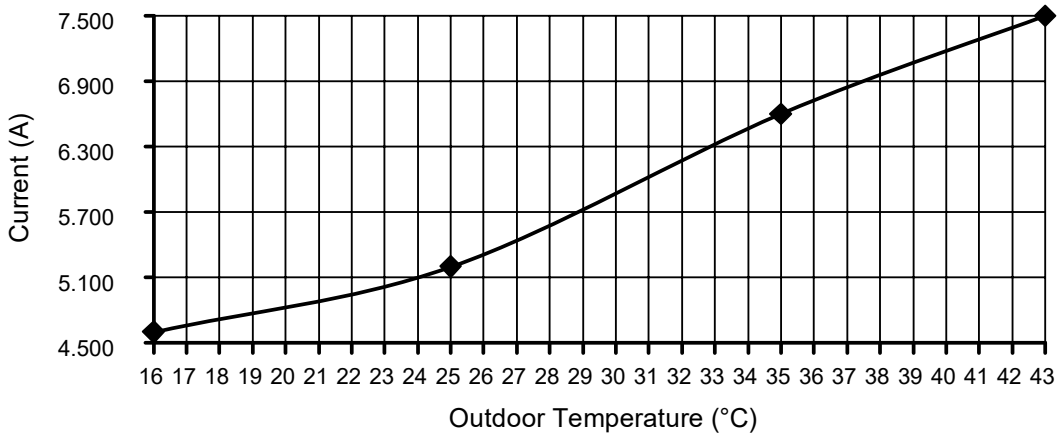

### 20.1.3 WH-WDG09LE5

**Heating Characteristics at Different Outdoor Air Temperature**

Condition
Outdoor air temperature : 7°C (DBT), 6°C (WBT)
Indoor water inlet temperature : 30°C
Indoor water outlet temperature : 25°C
Piping length : 5m

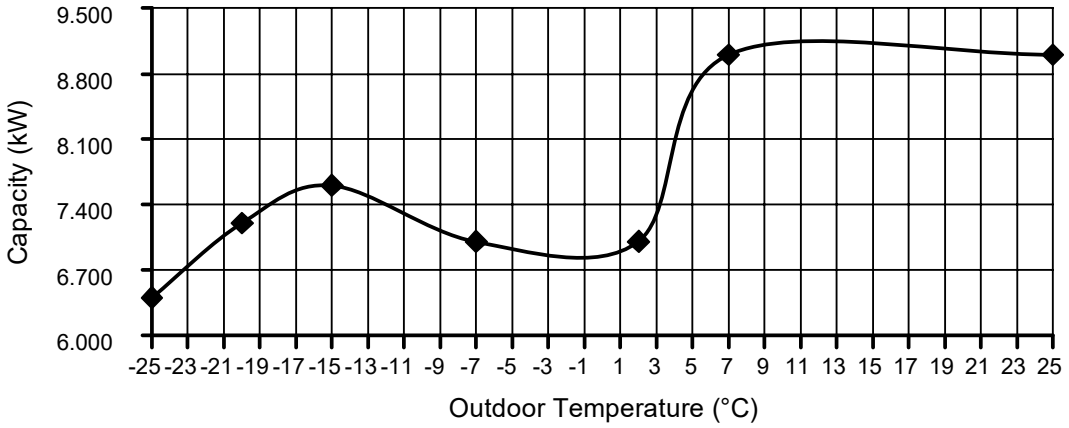


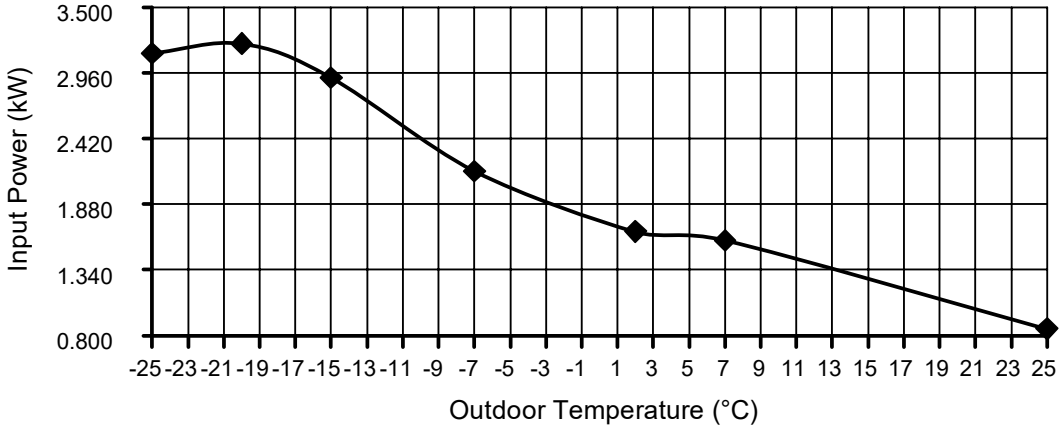


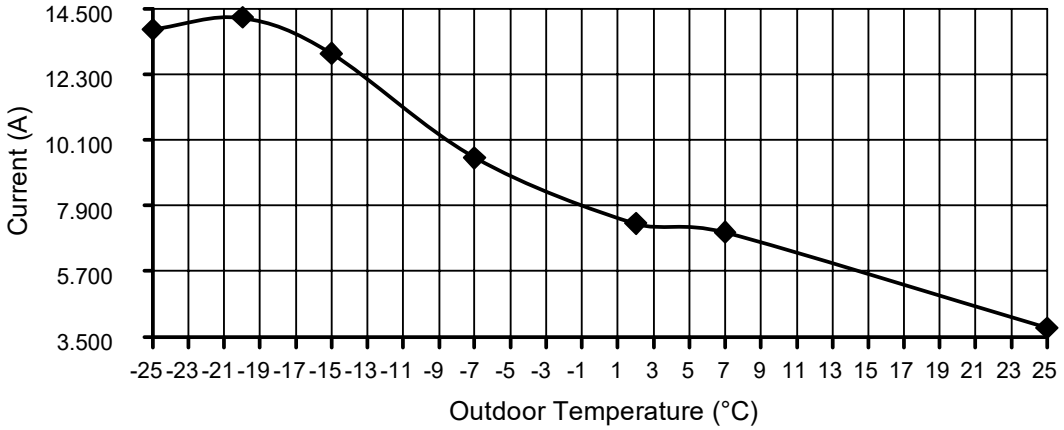

**Cooling Characteristics at Different Outdoor Air Temperature**

Condition
Outdoor air temperature : 35°C (DBT), -°C (WBT)
Indoor water inlet temperature : 12°C
Indoor water outlet temperature : 7°C
Piping length : 5m

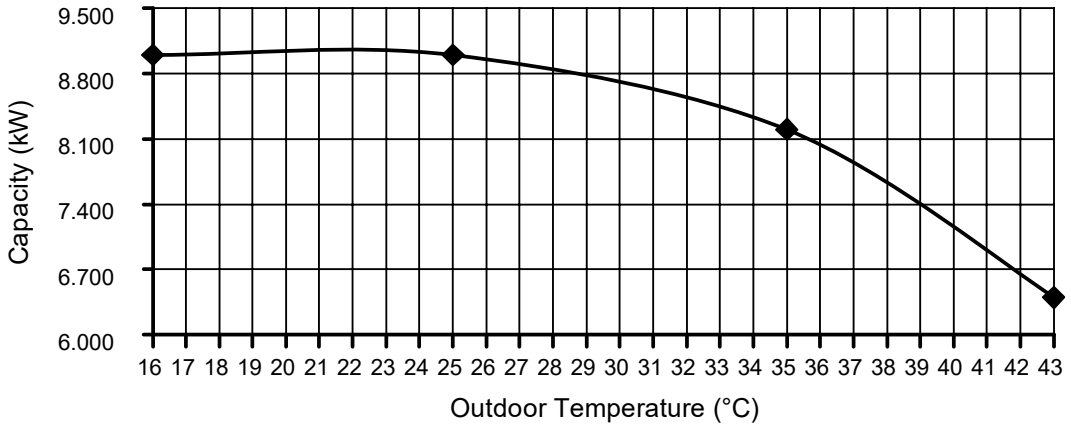


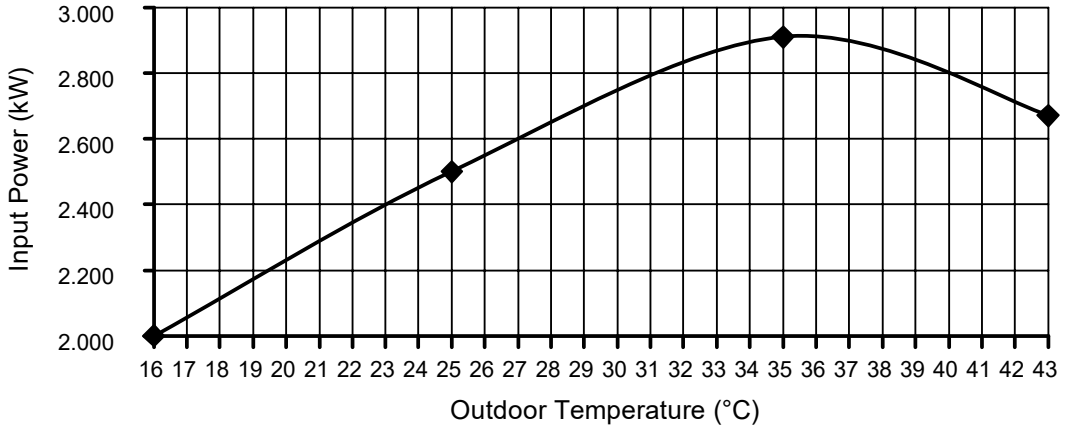


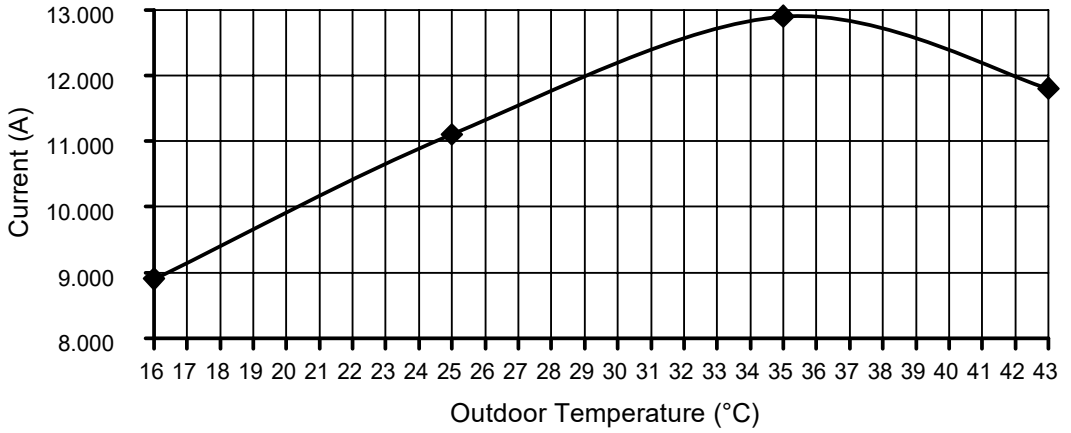

**Cooling Characteristics at Different Outdoor Air Temperature**

Condition
Outdoor air temperature : 35°C (DBT), -°C (WBT)
Indoor water inlet temperature : 19°C
Indoor water outlet temperature : 14°C
Piping length : 5m

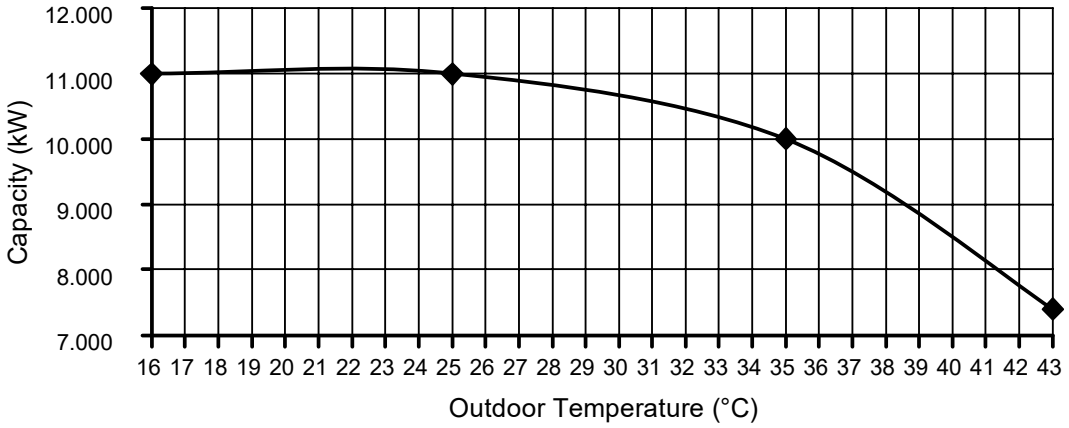


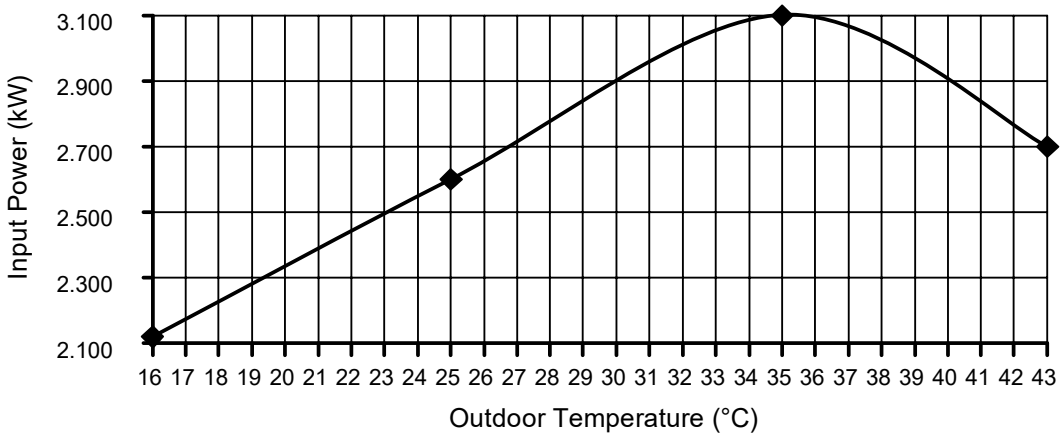


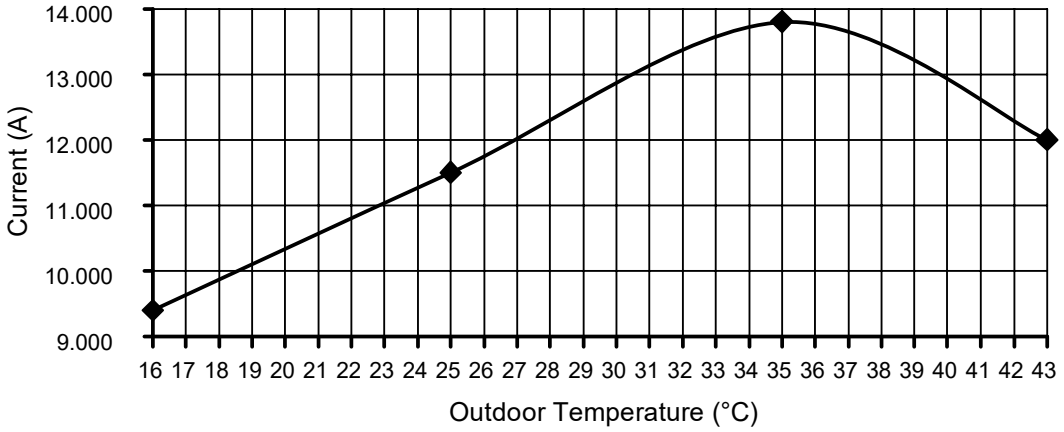

**Cooling Characteristics at Different Outdoor Air Temperature**

Condition
Outdoor air temperature : 35°C (DBT), -°C (WBT)
Indoor water inlet temperature : 23°C
Indoor water outlet temperature : 18°C
Piping length : 5m

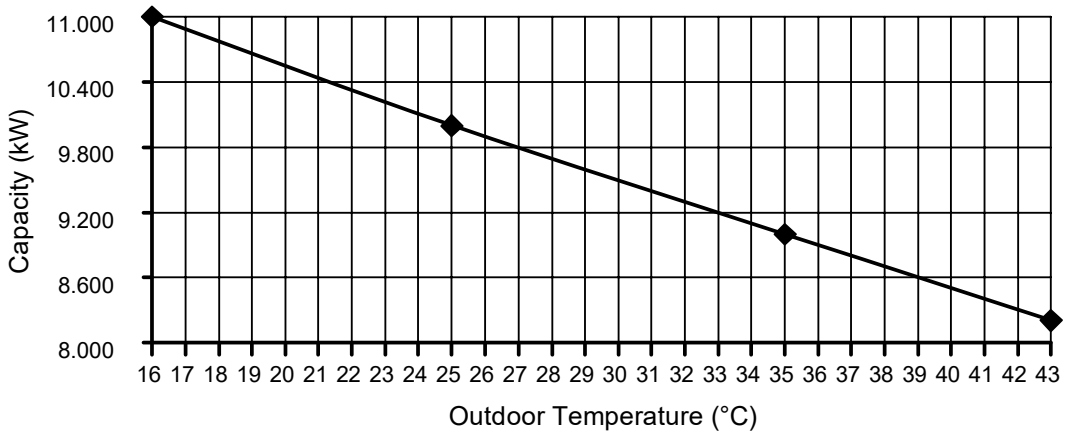


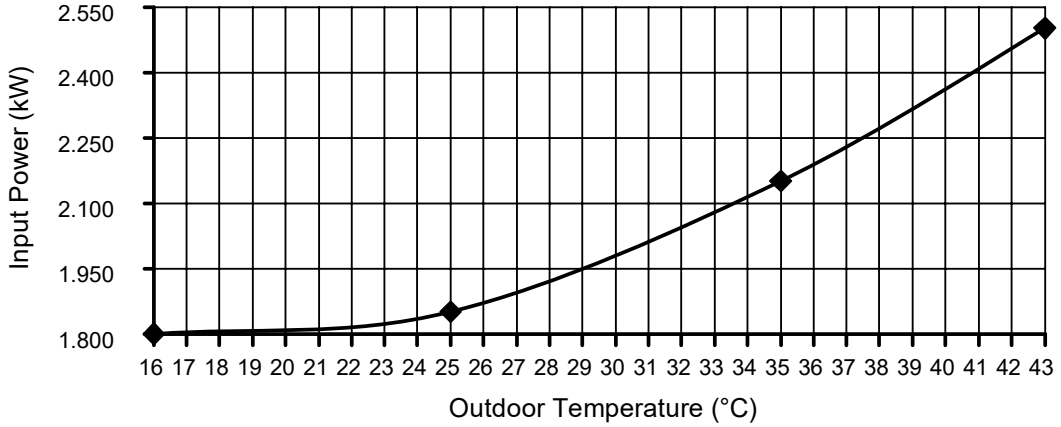


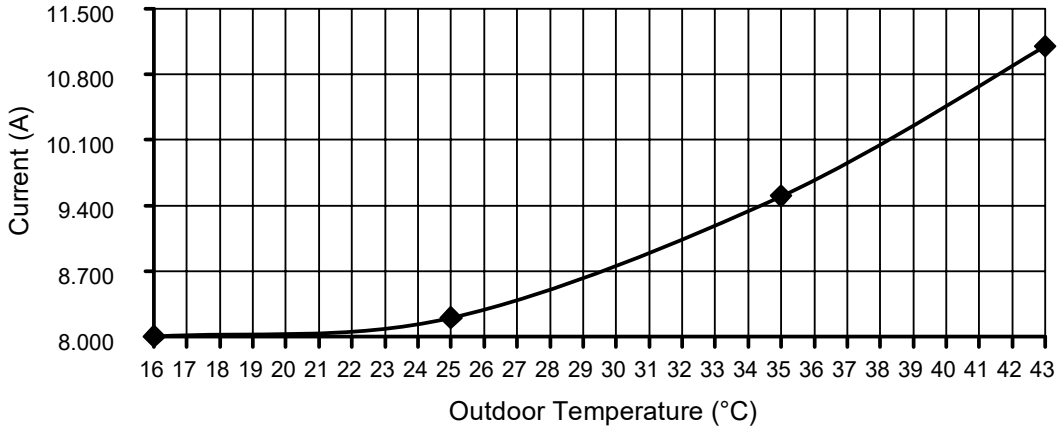

## 20.2 Heating Capacity Table

### 20.2.1 WH-WDG05LE5

| Water Out (°C) | 25 | | | 35 | | | 45 | | |
|---|---|---|---|---|---|---|---|---|---|
| Outdoor Air (°C) | Capacity (W) | Input Power (W) | Current (A) | Capacity (W) | Input Power (W) | Current (A) | Capacity (W) | Input Power (W) | Current (A) |
| -25 | 2600 | 1580 | 7.0 | 2450 | 1760 | 7.8 | 3800 | 2300 | 10.2 |
| -20 | 4900 | 2010 | 8.9 | 4700 | 2190 | 9.7 | 4500 | 2370 | 10.5 |
| -15 | 5000 | 1750 | 7.8 | 5000 | 1940 | 8.6 | 5000 | 2310 | 10.2 |
| -7 | 5000 | 1370 | 6.1 | 5000 | 1660 | 7.4 | 5000 | 1940 | 8.6 |
| 2 | 5000 | 1120 | 5.0 | 5000 | 1420 | 6.3 | 5000 | 1710 | 7.6 |
| 7 | 5000 | 760 | 3.4 | 5000 | 990 | 4.4 | 5000 | 1270 | 5.6 |
| 25 | 5000 | 370 | 1.8 | 5000 | 600 | 2.9 | 5000 | 860 | 3.8 |

| Water Out (°C) | 55 | | | 65 | | | 75 | | |
|---|---|---|---|---|---|---|---|---|---|
| Outdoor Air (°C) | Capacity (W) | Input Power (W) | Current (A) | Capacity (W) | Input Power (W) | Current (A) | Capacity (W) | Input Power (W) | Current (A) |
| -25 | 3600 | 2460 | 10.9 | - | - | - | - | - | - |
| -20 | 4250 | 2570 | 11.4 | - | - | - | - | - | - |
| -15 | 5000 | 2630 | 11.7 | 4600 | 2880 | 12.8 | - | - | - |
| -7 | 5000 | 2360 | 10.5 | 5000 | 2620 | 11.6 | 4300 | 2870 | 12.7 |
| 2 | 5000 | 2140 | 9.5 | 5000 | 2540 | 11.3 | 4600 | 2760 | 12.2 |
| 7 | 5000 | 1630 | 7.2 | 5000 | 2030 | 9.0 | 4700 | 2570 | 11.4 |
| 25 | 5000 | 1100 | 4.9 | 5000 | 1470 | 6.5 | 4700 | 1990 | 8.8 |

### 20.2.2 WH-WDG07LE5

| Water Out (°C) | 25 | | | 35 | | | 45 | | |
|---|---|---|---|---|---|---|---|---|---|
| Outdoor Air (°C) | Capacity (W) | Input Power (W) | Current (A) | Capacity (W) | Input Power (W) | Current (A) | Capacity (W) | Input Power (W) | Current (A) |
| -25 | 3150 | 2020 | 9.0 | 4750 | 2530 | 11.2 | 4300 | 2660 | 11.8 |
| -20 | 5500 | 2390 | 10.6 | 5500 | 2560 | 11.4 | 5100 | 2750 | 12.2 |
| -15 | 6000 | 2200 | 9.8 | 6000 | 2500 | 11.1 | 5500 | 2600 | 11.5 |
| -7 | 5600 | 1640 | 7.3 | 5800 | 1930 | 8.6 | 5800 | 2320 | 10.3 |
| 2 | 6850 | 1600 | 7.1 | 6850 | 2000 | 8.9 | 6600 | 2340 | 10.4 |
| 7 | 7000 | 1100 | 4.9 | 7000 | 1420 | 6.3 | 7000 | 1900 | 8.4 |
| 25 | 7000 | 500 | 2.4 | 7000 | 810 | 3.7 | 7000 | 1230 | 5.5 |

| Water Out (°C) | 55 | | | 65 | | | 75 | | |
|---|---|---|---|---|---|---|---|---|---|
| Outdoor Air (°C) | Capacity (W) | Input Power (W) | Current (A) | Capacity (W) | Input Power (W) | Current (A) | Capacity (W) | Input Power (W) | Current (A) |
| -25 | 3950 | 2780 | 12.3 | - | - | - | - | - | - |
| -20 | 4900 | 2970 | 13.2 | - | - | - | - | - | - |
| -15 | 5200 | 2890 | 12.8 | 4800 | 3000 | 13.3 | - | - | - |
| -7 | 5800 | 2740 | 12.2 | 5700 | 3160 | 14.0 | 4800 | 3560 | 15.8 |
| 2 | 6250 | 2670 | 11.8 | 5600 | 2800 | 12.4 | 5000 | 3130 | 13.9 |
| 7 | 7000 | 2350 | 10.4 | 6600 | 2850 | 12.6 | 6300 | 3400 | 15.1 |
| 25 | 7000 | 1650 | 7.3 | 7000 | 2060 | 9.1 | 7000 | 2800 | 12.4 |

## 20.2.3 WH-WDG09LE5

| Water Out (°C) | 25 | | | 35 | | | 45 | | |
|---|---|---|---|---|---|---|---|---|---|
| Outdoor Air (°C) | Capacity (W) | Input Power (W) | Current (A) | Capacity (W) | Input Power (W) | Current (A) | Capacity (W) | Input Power (W) | Current (A) |
| -25 | 6400 | 3120 | 13.8 | 6050 | 3430 | 15.2 | 5250 | 3280 | 14.6 |
| -20 | 7200 | 3200 | 14.2 | 7000 | 3560 | 15.8 | 6200 | 3500 | 15.5 |
| -15 | 7600 | 2920 | 13.0 | 7400 | 3200 | 14.2 | 6800 | 3400 | 15.1 |
| -7 | 7000 | 2150 | 9.5 | 7000 | 2500 | 11.1 | 7000 | 2980 | 13.2 |
| 2 | 7000 | 1650 | 7.3 | 7000 | 2050 | 9.1 | 7000 | 2500 | 11.1 |
| 7 | 9000 | 1580 | 7.0 | 9000 | 1980 | 8.8 | 9000 | 2580 | 11.4 |
| 25 | 9000 | 850 | 3.8 | 9000 | 1280 | 5.7 | 9000 | 1730 | 7.7 |

| Water Out (°C) | 55 | | | 65 | | | 75 | | |
|---|---|---|---|---|---|---|---|---|---|
| Outdoor Air (°C) | Capacity (W) | Input Power (W) | Current (A) | Capacity (W) | Input Power (W) | Current (A) | Capacity (W) | Input Power (W) | Current (A) |
| -25 | 4650 | 3150 | 14.0 | - | - | - | - | - | - |
| -20 | 5600 | 3430 | 15.2 | - | - | - | - | - | - |
| -15 | 6300 | 3550 | 15.7 | 5600 | 3550 | 15.7 | - | - | - |
| -7 | 7000 | 3290 | 14.6 | 6500 | 3530 | 15.7 | 5400 | 3560 | 15.8 |
| 2 | 7000 | 2900 | 12.9 | 6700 | 3350 | 14.9 | 5700 | 3400 | 15.1 |
| 7 | 8900 | 2940 | 13.0 | 8900 | 3560 | 15.8 | 7300 | 3560 | 15.8 |
| 25 | 9000 | 2200 | 9.8 | 9000 | 2700 | 12.0 | 8000 | 2900 | 12.9 |

## 20.3 Cooling Capacity Table

### 20.3.1 WH-WDG05LE5

| Water Out (°C) | 7 | | | 14 | | | 18 | | |
|---|---|---|---|---|---|---|---|---|---|
| Outdoor Air (°C) | Capacity (W) | Input Power (W) | Current (A) | Capacity (W) | Input Power (W) | Current (A) | Capacity (W) | Input Power (W) | Current (A) |
| 16 | 6000 | 1010 | 4.5 | 7500 | 1050 | 4.7 | 6000 | 670 | 3.0 |
| 25 | 5700 | 1200 | 5.3 | 7000 | 1200 | 5.3 | 5700 | 780 | 3.5 |
| 35 | 5000 | 1550 | 6.9 | 6300 | 1440 | 6.4 | 5000 | 1000 | 4.4 |
| 43 | 4500 | 1600 | 7.1 | 5600 | 1640 | 7.3 | 4500 | 1120 | 5.0 |

### 20.3.2 WH-WDG07LE5

| Water Out (°C) | 7 | | | 14 | | | 18 | | |
|---|---|---|---|---|---|---|---|---|---|
| Outdoor Air (°C) | Capacity (W) | Input Power (W) | Current (A) | Capacity (W) | Input Power (W) | Current (A) | Capacity (W) | Input Power (W) | Current (A) |
| 16 | 7000 | 1360 | 6.0 | 8500 | 1390 | 6.2 | 8000 | 1040 | 4.6 |
| 25 | 7000 | 1650 | 7.3 | 8000 | 1570 | 7.0 | 7500 | 1180 | 5.2 |
| 35 | 7000 | 2310 | 10.2 | 8000 | 2260 | 10.0 | 7000 | 1480 | 6.6 |
| 43 | 6000 | 2500 | 11.1 | 7000 | 2600 | 11.5 | 5700 | 1700 | 7.5 |

### 20.3.3 WH-WDG09LE5

| Water Out (°C) | 7 | | | 14 | | | 18 | | |
|---|---|---|---|---|---|---|---|---|---|
| Outdoor Air (°C) | Capacity (W) | Input Power (W) | Current (A) | Capacity (W) | Input Power (W) | Current (A) | Capacity (W) | Input Power (W) | Current (A) |
| 16 | 9000 | 2000 | 8.9 | 11000 | 2120 | 9.4 | 11000 | 1800 | 8.0 |
| 25 | 9000 | 2500 | 11.1 | 11000 | 2600 | 11.5 | 10000 | 1850 | 8.2 |
| 35 | 8200 | 2910 | 12.9 | 10000 | 3100 | 13.8 | 9000 | 2150 | 9.5 |
| 43 | 6400 | 2670 | 11.8 | 7400 | 2700 | 12.0 | 8200 | 2500 | 11.1 |

# 21. Exploded View and Replacement Parts List

## *21.1 Indoor Unit*

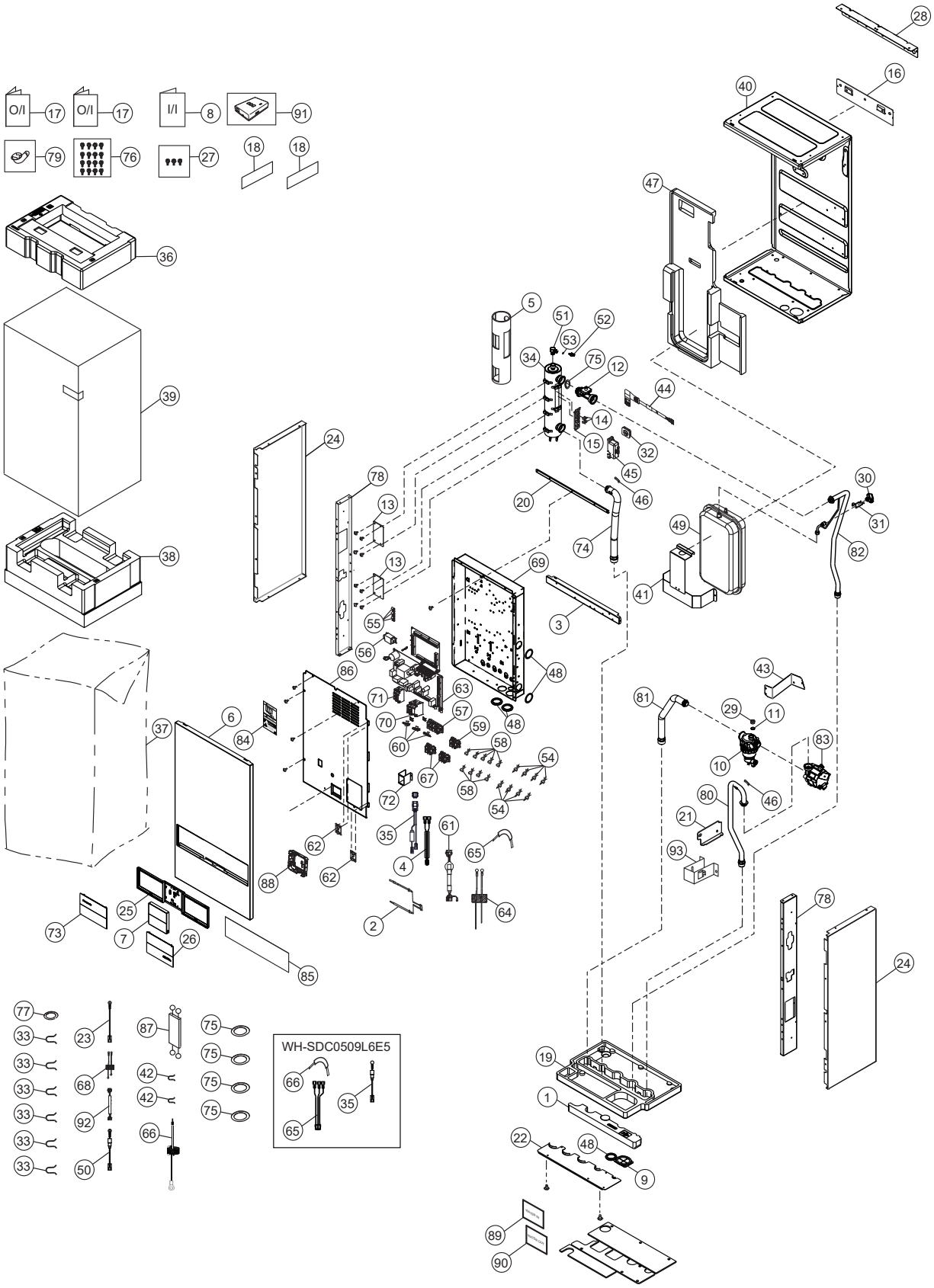


**Note:**
The above exploded view is for the purpose of parts disassembly and replacement.
The non-numbered parts are not kept as standard service parts.

| SAFETY | REF. NO. | DESCRIPTION & NAME | QTY. | WH-SDC0509L3E5 | WH-SDC0509L6E5 | REMARK |
|---|---|---|---|---|---|---|
| | 1 | FOAMED POLYSTYRENE | 1 | ACXG07-08060 | ← | |
| ⚠ | 2 | SENSOR - COMPLETE | 1 | ACXA50C19310 | ← | |
| | 3 | PARTICULAR PLATE | 1 | D912685 | ← | |
| ⚠ | 4 | LEAD WIRE - COMPLETE | 1 | ACXA60C96920 | ← | |
| | 5 | SOUND PROOF MATERIAL | 1 | ACXG30-10230 | ← | |
| | 6 | CABINET FRONT PLATE | 1 | ACXE06-05290A | ← | |
| ⚠ | 7 | REMOTE CONTROL SWITCH - COMPLETE | 1 | ACXA75C23211 | ← | |
| | 8 | INSTALLATION INSTRUCTION COMPLETE | 1 | ACXF60C20020 | ← | |
| | 9 | PACKING | 1 | ACXB81-00040 | ← | O |
| | 10 | FILTER COMPLETE | 1 | ACXB51C00110 | ← | |
| | 11 | PACKING | 1 | ACXB81-06810 | ← | |
| | 12 | FLOW SENSOR | 1 | ACXB62-00912 | ← | O |
| | 13 | Z-SHAPED PLATE | 2 | D631059 | ← | |
| ⚠ | 14 | THERMOSTAT | 2 | ACXA15-00260 | ← | |
| | 15 | U-SHAPED PIECE | 1 | D721031 | ← | |
| | 16 | INSTALLING HOLDER A | 1 | H361103CZ | ← | |
| | 17 | OPERATING INSTRUCTION - COMPLETE | 1 | ACXF55C27960 | ACXF55C27970 | |
| | 18 | MODEL LABEL | 1 | ACXF87-04880 | ACXF87-04890 | |
| | 19 | FOAMED POLYSTYRENE | 1 | G071795 | ← | |
| | 20 | PARTICULAR PLATE | 1 | D912684 | ← | |
| | 21 | L-PIECE | 1 | ACXD70-02350 | ← | |
| | 22 | FLAT PLATE | 1 | ACXD64-01690 | ← | |
| | 23 | LEAD WIRE - COMPLETE | 1 | ACXA60C96930 | ← | |
| | 24 | CABINET SIDE PLATE | 2 | ACXE04-13580A | ← | |
| | 25 | BOX SHAPED PLATE | 1 | ACXD66-03970 | ← | |
| | 26 | DECORATION BASE ASSY (AQUAREA) | 1 | ACXE35K03640 | ← | |
| | 27 | ACCESSORY - COMPLETE (SCREWS) | 1 | ACXH82C03490 | ← | |
| | 28 | INSTALLING HOLDER B | 1 | H361119 | ← | |
| | 29 | PLUG | 1 | ACXB82-00840 | ← | |
| | 30 | PRESSURE SENSOR | 1 | ACXB62-01110 | ← | |
| | 31 | WIRE SPRING | 1 | ACXH72-00341 | ← | |
| | 32 | PACKING | 1 | B811177 | ← | |
| | 33 | RETAINING RING (25.4) | 6 | ACXH58-00370 | ← | |
| ⚠ | 34 | HEATER ASSY | 1 | ACXA34K00070 | ACXA34K00430 | |
| | 35 | LEAD WIRE - COMPLETE | 1 | ACXA60C96900 | A68C1437 | |
| | 36 | SHOCK ABSORBER | 1 | ACXG70-15470 | ← | |
| | 37 | BAG (UNIT) | 1 | ACXG86-04152 | ← | |
| | 38 | BASE BOARD - COMPLETE | 1 | ACXG62C02920 | ← | |
| | 39 | C.C. CASE | 1 | ACXG50-47955 | ← | |
| | 40 | BASE PAN COMPLETE | 1 | D521450CZ | ← | |
| | 41 | PARTICULAR PLATE - ASSY | 1 | ACXD90K02450 | ← | |
| | 42 | RETAINING RING (14-23) | 2 | H581038 | ← | |
| | 43 | Z-SHAPED PLATE | 1 | ACXD63-01460 | ← | |

| SAFETY | REF. NO. | DESCRIPTION & NAME | QTY. | WH-SDC0509L3E5 | WH-SDC0509L6E5 | REMARK |
|---|---|---|---|---|---|---|
| | 44 | LEAD WIRE - COMPLETE | 1 | A68C2281 | ← | |
| | 45 | TERMINAL COVER | 1 | H171051 | ← | |
| | 46 | PLATE SPRING | 2 | H711019 | ← | |
| | 47 | FOAMED POLYSTYRENE | 1 | ACXG07-06070 | ← | |
| | 48 | PACKING | 5 | ACXB81-00030 | ← | |
| | 49 | RECEIVER | 1 | ACXB14-00720 | ← | |
| ⚠ | 50 | LEAD WIRE - COMPLETE | 1 | ACXA60C96910 | ← | |
| | 51 | VALVE BODY - COMPLETE | 1 | ACXB62C01130 | ← | |
| | 52 | PLUG | 1 | ACXB82-00860 | ← | |
| | 53 | PACKING | 1 | ACXB81-00020 | ← | |
| | 54 | SPACER | 8 | H54294 | ← | |
| | 55 | A-PIECE | 3 | D77001 | ← | |
| ⚠ | 56 | PEAKING COILS | 1 | G0C103Z00003 | ← | |
| ⚠ | 57 | TERMINAL BOARD ASSY | 1 | A28K1217 | ← | |
| | 58 | SPACER | 9 | H54295 | ← | |
| ⚠ | 59 | TERMINAL BOARD ASSY | 1 | A28K1238 | ← | |
| | 60 | HOLDER - P.S. CORD | 3 | H31103 | ← | |
| ⚠ | 61 | LEAD WIRE - COMPLETE | 1 | ACXA60C77950 | ← | |
| | 62 | HINGE | 2 | H611006 | ← | |
| ⚠ | 63 | ELECTRONIC CONTROLLER | 1 | ACXA73C95310 | ACXA73C95320 | |
| ⚠ | 64 | LEAD WIRE - COMPLETE | 1 | ACXA60C98890 | ← | |
| ⚠ | 65 | LEAD WIRE - COMPLETE | 1 | ACXA60C98860 | ACXA60C97520 | |
| ⚠ | 66 | LEAD WIRE - COMPLETE | 1 | ACXA60C98870 | ACXA60C98880 | |
| ⚠ | 67 | TERMINAL BOARD ASSY | 2 | A28K1200 | ← | |
| ⚠ | 68 | LEAD WIRE - COMPLETE | 1 | ACXA60C98850 | ← | |
| | 69 | CONTROL BOARD ASSY | 1 | ACXH10-10011 | ← | |
| | 70 | CIRCUIT BREAKER | 1 | ACXA18-00011 | ← | |
| ⚠ | 71 | RESIDUAL CURRENT OPR. CIRCUIT - BREAKERS | 1 | K5KYYAY00003 | ← | |
| | 72 | U-SHAPED PIECE | 1 | D721014 | ← | |
| | 73 | DECORATION BASE ASSY (PANASONIC) | 1 | ACXE35K03630 | ← | |
| | 74 | TUBE ASSY - COMPLETE | 1 | ACXT00C45000 | ← | |
| | 75 | PACKING | 5 | ACXB81-06910 | ← | |
| | 76 | SCREW - COMPLETE | 16 | H551198 | ← | |
| | 77 | PACKING | 1 | B811179 | ← | |
| | 78 | CONNECTING BAR | 2 | ACXE26-03080 | ← | |
| | 79 | BAG - COMPLETE | 1 | G87C900 | ← | |
| | 80 | TUBE ASSY - COMPLETE | 1 | ACXT00C45131 | ← | |
| | 81 | TUBE ASSY - COMPLETE | 1 | ACXT00C45150 | ← | |
| | 82 | TUBE ASSY - COMPLETE | 1 | ACXT00C45170 | ← | |
| ⚠ | 83 | PUMP | 1 | ACXB53-00850 | ← | |
| | 84 | CAUTION LABEL | 1 | ACXF75-15160 | ← | |
| | 85 | RUBBER (DECO) | 1 | ACXB81-07400 | ← | |

| SAFETY | REF. NO. | DESCRIPTION & NAME | QTY. | WH-SDC0509L3E5 | WH-SDC0509L6E5 | REMARK |
|---|---|---|---|---|---|---|
| | 86 | CONTROL BOARD COVER | 1 | ACXH13-09380 | ← | |
| ⚠ | 87 | LEAD WIRE - COMPLETE | 1 | ACXA60C96950 | ← | |
| | 88 | BOX SHAPED PLATE | 1 | ACXD66-03961 | ← | |
| | 89 | WATER IN | 1 | ACXF71-22770 | ← | |
| | 90 | WATER OUT | 1 | ACXF71-22780 | ← | |
| ⚠ | 91 | NETWORK ADAPTOR - COMPLETE | 1 | ACXA75C23080-1 | ← | |
| | 92 | LEAD WIRE - COMPLETE | 1 | ACXA60C99130 | ← | |
| | 93 | CONVEY PIECE | 1 | ACXD75-00650 | ← | |

**Note:**

- All parts are supplied from PHVACCZ, Czech (Vendor Code: 00029407).
- “O” marked parts are recommended to be kept in stock.

## 21.2 Outdoor Unit

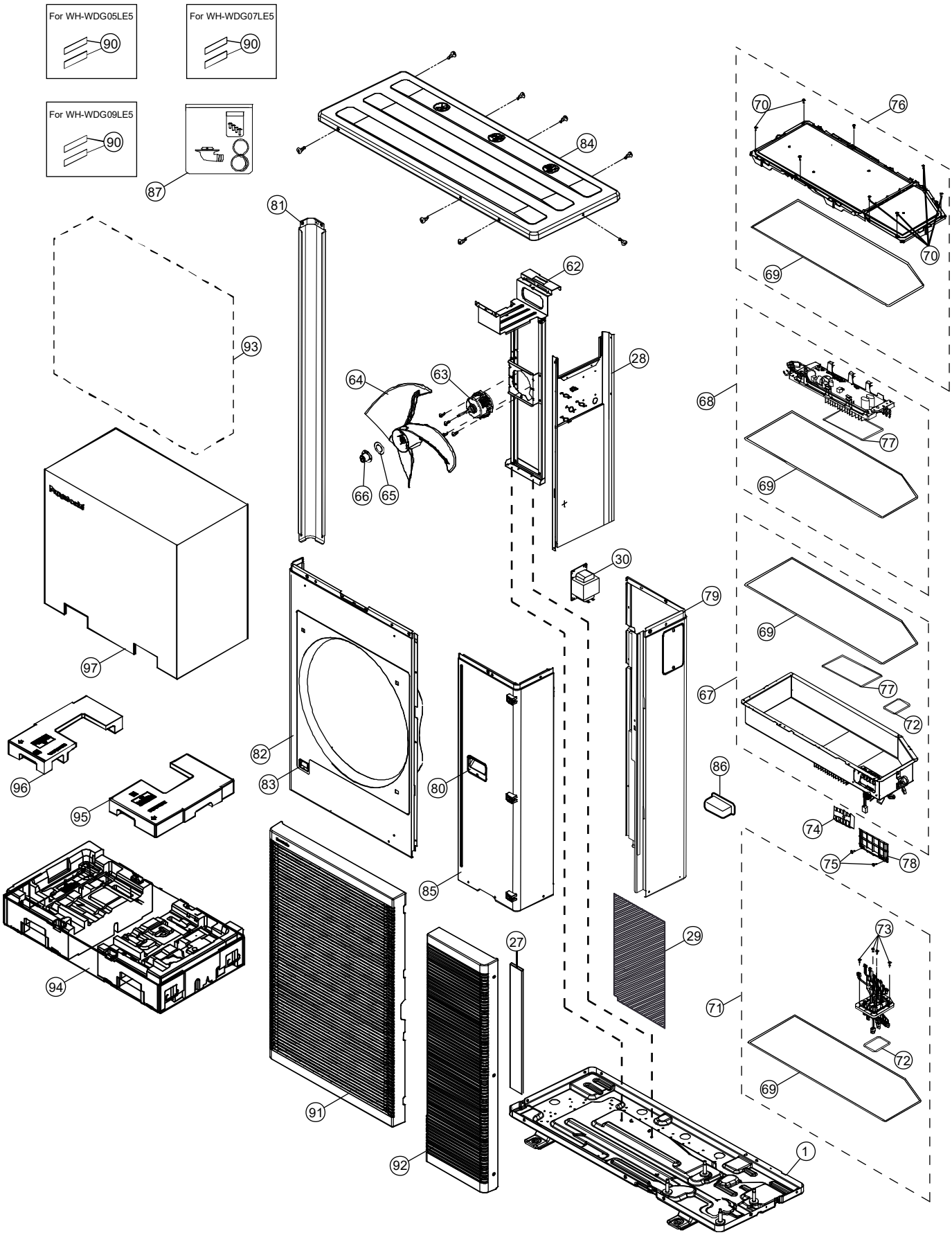


**Note:**
The above exploded view is for the purpose of parts disassembly and replacement.
The non-numbered parts are not kept as standard service parts.

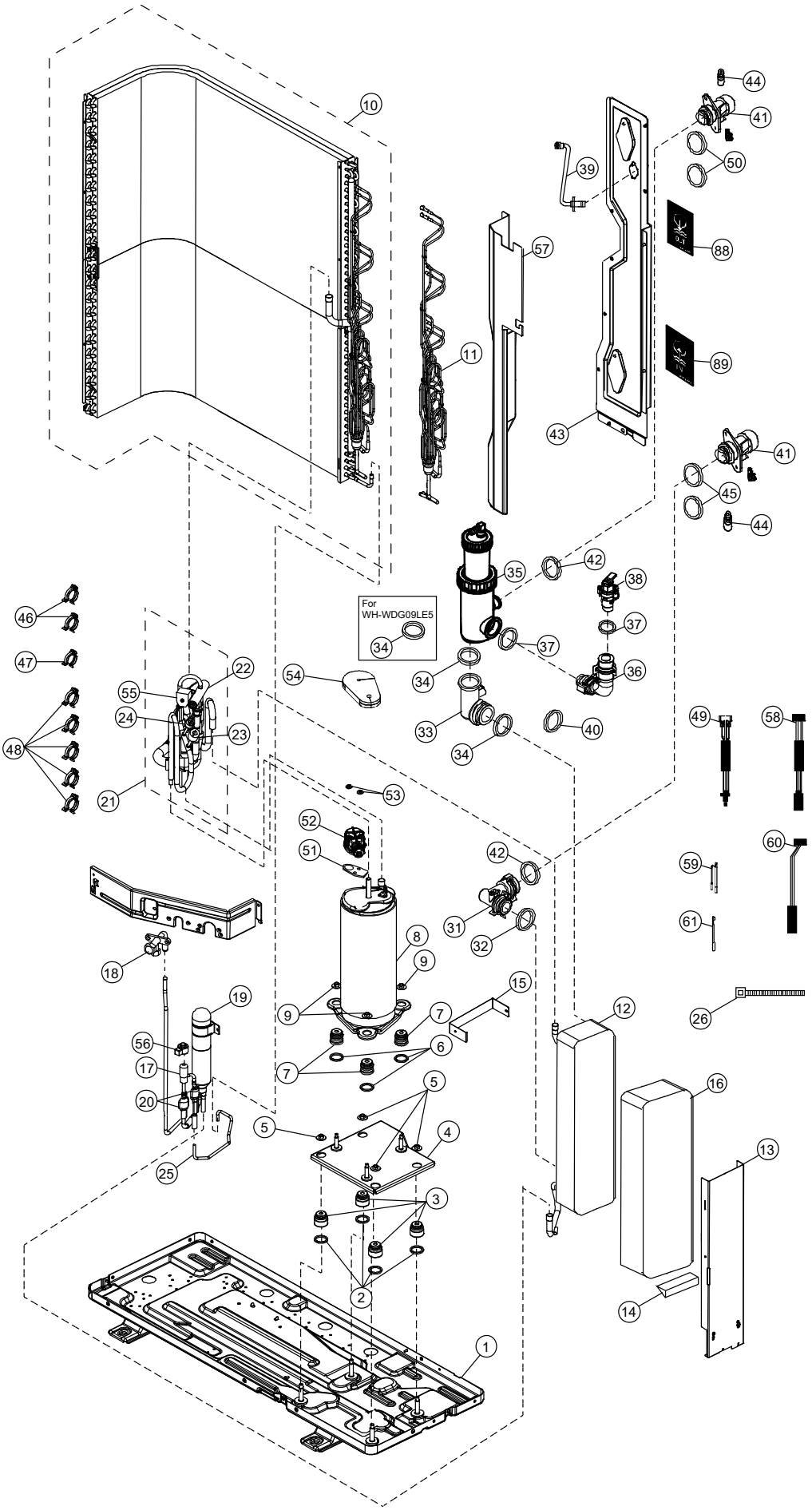


**Note:**
The above exploded view is for the purpose of parts disassembly and replacement.
The non-numbered parts are not kept as standard service parts.

| SAFETY | REF. NO. | DESCRIPTION & NAME | QTY. | WH-WDG05LE5 | WH-WDG07LE5 | REMARK |
|---|---|---|---|---|---|---|
| | 1 | BASE PAN ASSY | 1 | ACXD52K05240 | ← | O |
| | 2 | O-RING (COMPRESSOR) | 4 | CWB811017 | ← | |
| | 3 | ANTI - VIBRATION BUSHING | 4 | ACXH50-00480 | ← | |
| | 4 | FLAT PLATE ASSY | 1 | ACXD64K00030 | ← | O |
| | 5 | NUT | 4 | CWH561049 | ← | |
| | 6 | O-RING (COMPRESSOR) | 3 | CWB811017 | ← | |
| | 7 | ANTI - VIBRATION BUSHING | 3 | CWH50055 | ← | |
| ⚠ | 8 | COMPRESSOR | 1 | 7JD420XAA62 | ← | O |
| | 9 | NUT | 3 | CWH561049 | ← | |
| | 10 | CONDENSER COMPLETE | 1 | ACXB32C26600 | ← | O |
| | 11 | MANIFOLD TUBE ASSY | 1 | ACXT07K10070 | ← | O |
| | 12 | HOT WATER COIL - COMPLETE | 1 | ACXB90C01770 | ← | O |
| | 13 | PARTICULAR PLATE | 1 | ACXD90-28980 | ← | O |
| | 14 | PARTICULAR PLATE | 1 | ACXD90-28990 | ← | O |
| | 15 | PARTICULAR PLATE | 1 | ACXD90-29010 | ← | O |
| | 16 | FOAMED POLYSTYRENE | 1 | ACXG07-08030 | ← | O |
| | 17 | EXPANTION VALVE | 1 | CWB051029 | ← | |
| | 18 | 2-WAYS VALVE | 1 | ACXB02-03960 | ← | O |
| | 19 | RECEIVER | 1 | ACXB14-00760 | ← | O |
| | 20 | STRAINER | 2 | CWB111024 | ← | |
| | 21 | 4-WAYS VALVE COMPLETE | 1 | ACXB00C03121 | ← | O |
| | 22 | 4-WAYS VALVE | 1 | ACXB00-01520 | ← | O |
| ⚠ | 23 | HIGH PRESSURE SENSOR | 1 | ACXA50-06450 | ← | O |
| ⚠ | 24 | HIGH PRESSURE SWITCH | 1 | ACXA10-00710 | ← | O |
| | 25 | MULTIBENT TUBE | 1 | ACXT31-23920 | ← | O |
| | 26 | HOSE BAND | 1 | CWH4090023 | ← | |
| | 27 | SOUND PROOF MATERIAL | 1 | ACXG30-13340 | ← | O |
| | 28 | SOUND - PROOF BOARD | 1 | ACXH15-03930 | ← | O |
| | 29 | SOUND PROOF MATERIAL | 1 | ACXG30-13380 | ← | O |
| ⚠ | 30 | FIXED INDUCTORS | 1 | G0C392J00060 | ← | O |
| | 31 | L-SHAPED TUBE | 1 | ACXT20-14160 | ← | O |
| | 32 | O-RING (TUBE) | 1 | ACXB81-06910 | ← | O |
| | 33 | L-SHAPED TUBE | 1 | ACXT20-14150 | ← | O |
| | 34 | O-RING (TUBE) | 2 | ACXB81-06910 | ← | O |
| | 35 | FILTER COMPLETE | 1 | ACXB51C00130 | ← | O |
| | 36 | TUBE ASSY | 1 | ACXT00-78420 | ← | O |
| | 37 | O-RING (PRESSURE RELIEF VALVE) | 2 | ACXB81-06820 | ← | O |
| ⚠ | 38 | RELIEF VALVE | 1 | ACXB62-00740 | ← | |
| | 39 | TUBE ASSY | 1 | ACXT00-78430 | ← | O |
| | 40 | O-RING (PRESSURE RELIEF VALVE) | 1 | ACXB81-06820 | ← | O |
| | 41 | TUBE CONNECTER | 2 | ACXT29-02620 | ← | O |
| | 42 | O-RING (TUBE) | 2 | ACXB81-06910 | ← | O |

| SAFETY | REF. NO. | DESCRIPTION & NAME | QTY. | WH-WDG05LE5 | WH-WDG07LE5 | REMARK |
|---|---|---|---|---|---|---|
| | 43 | HOLDER - COUPLING | 1 | ACXH35-02220G | ← | O |
| | 44 | PLUG | 2 | CWB821027 | ← | |
| | 45 | O-RING (PLUG) | 2 | ACXB81-06770 | ← | |
| | 46 | RETAINING RING | 2 | CWH581007 | ← | |
| | 47 | RETAINING RING | 1 | CWH581038 | ← | |
| | 48 | RETAINING RING | 5 | ACXH58-00370 | ← | |
| ⚠ | 49 | SENSOR - CO. WATER IN OUT (CN-TH4) | 1 | ACXA50C18860 | ← | O |
| | 50 | O-RING (SENSOR) | 2 | ACXB81-06780 | ← | O |
| | 51 | O-RING (TERMINAL COVER) | 1 | ACXB81-07090 | ← | O |
| | 52 | TERMINAL COVER COMPLETE | 1 | ACXH17C00090 | ← | O |
| | 53 | NUT | 2 | CWH7080300J | ← | |
| | 54 | SOUND PROOF MATERIAL | 1 | ACXG30-13360 | ← | O |
| ⚠ | 55 | V-COIL CO. (4 WAY VALVE) | 1 | ACXA43C07580 | ← | O |
| ⚠ | 56 | V-COIL CO. (EXPENSION VALVE) | 1 | ACXA43C07590 | ← | O |
| | 57 | PARTICULAR PLATE | 1 | ACXD90-29000 | ← | O |
| ⚠ | 58 | SENSOR - CO. OUTDOOR DISCHARGE (CN-DIS) | 1 | ACXA50C18870 | ← | O |
| ⚠ | 59 | SENSOR - CO. OUTDOOR HEAT & AMBIENT (CN-TH1) | 1 | ACXA50C18880 | ← | O |
| ⚠ | 60 | SENSOR - CO. EVA OUTLET (CN-TH3) | 1 | ACXA50C18900 | ← | O |
| ⚠ | 61 | SENSOR - CO. REF TEMP (CN-TH4) | 1 | ACXA50C18910 | ← | O |
| | 62 | FAN MOTOR BRACKET | 1 | ACXD54-04100 | ← | O |
| ⚠ | 63 | FAN MOTOR DC 120W 3PH | 1 | L6CAYYYL0195 | ← | O |
| | 64 | FAN ASSY | 1 | CWH03K1103 | ← | |
| | 65 | WASHER | 1 | CWH571075A | ← | |
| | 66 | NUT | 1 | CWH561112A | ← | |
| | 67 | CONTROL BOARD ASSY | 1 | ACXH10K03170 | ← | O |
| ⚠ | 68 | ELECTRONIC CONTROLLER - MAIN | 1 | ACXA70C00100 | ACXA70C00110 | O |
| | 69 | O-RING (ELECTRONIC CO. - MAIN) | 1 | ACXB81-07210 | ← | O |
| | 70 | SCREW | 6 | CWH551198 | ← | |
| ⚠ | 71 | BOX SHAPED PLATE - CO. (LEADWIRE) | 1 | ACXD66C00710 | ← | O |
| | 72 | O-RING (BOX SHAPE PLATE) | 1 | ACXB81-07140 | ← | O |
| | 73 | SCREW | 4 | CWH551198 | ← | |
| ⚠ | 74 | TERMINAL BOARD ASS'Y | 1 | CWA28K1213 | ← | |
| | 75 | SCREW | 2 | CWH551198 | ← | |
| | 76 | CONTROL BOARD COVER | 1 | ACXH13K00910 | ← | O |
| | 77 | O-RING (CONTROL BOARD COVER) | 1 | ACXB81-07230 | ← | O |
| | 78 | CONTROL BOARD COVER - COMPLETE | 1 | ACXH13C06430 | ← | O |
| | 79 | CABINET SIDE PLATE - COMPLETE | 1 | ACXE04C08560 | ← | O |
| | 80 | HANDLE | 1 | ACXE16-00230G | ← | O |
| | 81 | CABINET SIDE PLATE | 1 | ACXE04-13350G | ← | O |
| | 82 | CABINET FRONT PLATE - COMPLETE | 1 | ACXE06C04680 | ← | O |
| | 83 | HANDLE | 1 | ACXE16-00230G | ← | O |

| SAFETY | REF. NO. | DESCRIPTION & NAME | QTY. | WH-WDG05LE5 | WH-WDG07LE5 | REMARK |
|---|---|---|---|---|---|---|
| | 84 | CABINET TOP PLATE - COMPLETE | 1 | ACXE03C02340 | ← | O |
| | 85 | CABINET FRONT PLATE - COMPLETE | 1 | ACXE06C04660 | ← | O |
| | 86 | HANDLE | 1 | ACXE16-00230G | ← | O |
| | 87 | ACCESSORY - COMPLETE | 1 | ACXH82C24920 | ← | O |
| | 88 | INDICATION LABEL | 1 | ACXF71-17600 | ← | O |
| | 89 | INDICATION LABEL | 1 | ACXF71-17610 | ← | O |
| | 90 | MODEL LABEL | 2 | ACXF87-03500 | ACXF87-03510 | O |
| | 91 | DISCHARGE GRILLE - COMPLETE | 1 | ACXE20C08790 | ← | O |
| | 92 | DISCHARGE GRILLE - COMPLETE | 1 | ACXE20C08800 | ← | O |
| | 93 | BAG | 1 | ACXG86-04431 | ← | |
| | 94 | BASE BOARD - COMPLETE | 1 | ACXG62C02820 | ← | O |
| | 95 | SHOCK ABSORBER | 1 | ACXG70-15320 | ← | O |
| | 96 | SHOCK ABSORBER | 1 | ACXG70-15330 | ← | O |
| | 97 | C.C. CASE | 1 | ACXG50-62250 | ← | O |

**Note:**

- All parts are supplied from PAPAMY, Malaysia (Vendor Code: 00029488).
- “O” marked parts are recommended to be kept in stock.

| SAFETY | REF. NO. | DESCRIPTION & NAME | QTY. | WH-WDG09LE5 | REMARK |
|---|---|---|---|---|---|
| | 1 | BASE PAN ASSY | 1 | ACXD52K05240 | O |
| | 2 | O-RING (COMPRESSOR) | 4 | CWB811017 | |
| | 3 | ANTI - VIBRATION BUSHING | 4 | ACXH50-00480 | |
| | 4 | FLAT PLATE ASSY | 1 | ACXD64K00030 | O |
| | 5 | NUT | 4 | CWH561049 | |
| | 6 | O-RING (COMPRESSOR) | 3 | CWB811017 | |
| | 7 | ANTI - VIBRATION BUSHING | 3 | CWH50055 | |
| ⚠ | 8 | COMPRESSOR | 1 | 7JD420XAA62 | O |
| | 9 | NUT | 3 | CWH561049 | |
| | 10 | CONDENSER COMPLETE | 1 | ACXB32C26600 | O |
| | 11 | MANIFOLD TUBE ASSY | 1 | ACXT07K10070 | O |
| | 12 | HOT WATER COIL - COMPLETE | 1 | ACXB90C01630 | O |
| | 13 | PARTICULAR PLATE | 1 | ACXD90-28980 | O |
| | 14 | PARTICULAR PLATE | 1 | ACXD90-28990 | O |
| | 15 | PARTICULAR PLATE | 1 | ACXD90-29010 | O |
| | 16 | FOAMED POLYSTYRENE | 1 | ACXG07-07800 | O |
| | 17 | EXPANTION VALVE | 1 | CWB051029 | |
| | 18 | 2-WAYS VALVE | 1 | ACXB02-03960 | O |
| | 19 | RECEIVER | 1 | ACXB14-00760 | O |
| | 20 | STRAINER | 2 | CWB111024 | |
| | 21 | 4-WAYS VALVE COMPLETE | 1 | ACXB00C03121 | O |
| | 22 | 4-WAYS VALVE | 1 | ACXB00-01520 | O |
| ⚠ | 23 | HIGH PRESSURE SENSOR | 1 | ACXA50-06450 | O |
| ⚠ | 24 | HIGH PRESSURE SWITCH | 1 | ACXA10-00710 | O |
| | 25 | MULTIBENT TUBE | 1 | ACXT31-23920 | O |
| | 26 | HOSE BAND | 1 | CWH4090023 | |
| | 27 | SOUND PROOF MATERIAL | 1 | ACXG30-13340 | O |
| | 28 | SOUND - PROOF BOARD | 1 | ACXH15-03930 | O |
| | 29 | SOUND PROOF MATERIAL | 1 | ACXG30-13380 | O |
| ⚠ | 30 | FIXED INDUCTORS | 1 | G0C392J00060 | O |
| | 31 | L-SHAPED TUBE | 1 | ACXT20-14160 | O |
| | 32 | O-RING (TUBE) | 1 | ACXB81-06910 | O |
| | 33 | L-SHAPED TUBE | 1 | ACXT20-14150 | O |
| | 34 | O-RING (TUBE) | 1 | ACXB81-06910 | O |
| | 35 | FILTER COMPLETE | 1 | ACXB51C00130 | O |
| | 36 | TUBE ASSY | 1 | ACXT00-78420 | O |
| | 37 | O-RING (PRESSURE RELIEF VALVE) | 2 | ACXB81-06820 | O |
| ⚠ | 38 | RELIEF VALVE | 1 | ACXB62-00740 | |
| | 39 | TUBE ASSY | 1 | ACXT00-78430 | O |
| | 40 | O-RING (PRESSURE RELIEF VALVE) | 1 | ACXB81-06820 | O |
| | 41 | TUBE CONNECTER | 2 | ACXT29-02620 | O |
| | 42 | O-RING (TUBE) | 2 | ACXB81-06910 | O |
| | 43 | HOLDER - COUPLING | 1 | ACXH35-02220G | O |

| SAFETY | REF. NO. | DESCRIPTION & NAME | QTY. | WH-WDG09LE5 | REMARK |
|---|---|---|---|---|---|
| | 44 | PLUG | 2 | CWB821027 | |
| | 45 | O-RING (PLUG) | 2 | ACXB81-06770 | |
| | 46 | RETAINING RING | 2 | CWH581007 | |
| | 47 | RETAINING RING | 1 | CWH581038 | |
| | 48 | RETAINING RING | 5 | ACXH58-00370 | |
| ⚠ | 49 | SENSOR - CO. WATER IN OUT (CN-TH4) | 1 | ACXA50C18860 | O |
| | 50 | O-RING (SENSOR) | 2 | ACXB81-06780 | O |
| | 51 | O-RING (TERMINAL COVER) | 1 | ACXB81-07090 | O |
| | 52 | TERMINAL COVER COMPLETE | 1 | ACXH17C00090 | O |
| | 53 | NUT | 2 | CWH7080300J | |
| | 54 | SOUND PROOF MATERIAL | 1 | ACXG30-13360 | O |
| ⚠ | 55 | V-COIL CO. (4 WAY VALVE) | 1 | ACXA43C07580 | O |
| ⚠ | 56 | V-COIL CO. (EXPENSION VALVE) | 1 | ACXA43C07590 | O |
| | 57 | PARTICULAR PLATE | 1 | ACXD90-29000 | O |
| ⚠ | 58 | SENSOR - CO. OUTDOOR DISCHARGE (CN-DIS) | 1 | ACXA50C18870 | O |
| ⚠ | 59 | SENSOR - CO. OUTDOOR HEAT & AMBIENT (CN-TH1) | 1 | ACXA50C18880 | O |
| ⚠ | 60 | SENSOR - CO. EVA OUTLET (CN-TH3) | 1 | ACXA50C18900 | O |
| ⚠ | 61 | SENSOR - CO. REF TEMP (CN-TH4) | 1 | ACXA50C18910 | O |
| | 62 | FAN MOTOR BRACKET | 1 | ACXD54-04100 | O |
| ⚠ | 63 | FAN MOTOR DC 120W 3PH | 1 | L6CAYYYL0195 | O |
| | 64 | FAN ASSY | 1 | CWH03K1103 | |
| | 65 | WASHER | 1 | CWH571075A | |
| | 66 | NUT | 1 | CWH561112A | |
| | 67 | CONTROL BOARD ASSY | 1 | ACXH10K03170 | O |
| ⚠ | 68 | ELECTRONIC CONTROLLER - MAIN | 1 | ACXA70C00120 | O |
| | 69 | O-RING (ELECTRONIC CO. - MAIN) | 1 | ACXB81-07210 | O |
| | 70 | SCREW | 6 | CWH551198 | |
| ⚠ | 71 | BOX SHAPED PLATE - CO. (LEADWIRE) | 1 | ACXD66C00710 | O |
| | 72 | O-RING (BOX SHAPE PLATE) | 1 | ACXB81-07140 | O |
| | 73 | SCREW | 6 | CWH551198 | |
| ⚠ | 74 | TERMINAL BOARD ASS'Y | 1 | CWA28K1213 | |
| | 75 | SCREW | 6 | CWH551198 | |
| | 76 | CONTROL BOARD COVER | 1 | ACXH13K00910 | O |
| | 77 | O-RING (CONTROL BOARD COVER) | 1 | ACXB81-07230 | O |
| | 78 | CONTROL BOARD COVER - COMPLETE | 1 | ACXH13C06430 | O |
| | 79 | CABINET SIDE PLATE - COMPLETE | 1 | ACXE04C08560 | O |
| | 80 | HANDLE | 1 | ACXE16-00230G | O |
| | 81 | CABINET SIDE PLATE | 1 | ACXE04-13350G | O |
| | 82 | CABINET FRONT PLATE - COMPLETE | 1 | ACXE06C04680 | O |
| | 83 | HANDLE | 1 | ACXE16-00230G | O |
| | 84 | CABINET TOP PLATE - COMPLETE | 1 | ACXE03C02340 | O |
| | 85 | CABINET FRONT PLATE - COMPLETE | 1 | ACXE06C04660 | O |
| | 86 | HANDLE | 1 | ACXE16-00230G | O |

| SAFETY | REF. NO. | DESCRIPTION & NAME | QTY. | WH-WDG09LE5 | REMARK |
|---|---|---|---|---|---|
| | 87 | ACCESSORY - COMPLETE | 1 | ACXH82C24920 | O |
| | 88 | INDICATION LABEL | 1 | ACXF71-17600 | O |
| | 89 | INDICATION LABEL | 1 | ACXF71-17610 | O |
| | 90 | MODEL LABEL | 2 | ACXF87-03520 | O |
| | 91 | DISCHARGE GRILLE - COMPLETE | 1 | ACXE20C08790 | O |
| | 92 | DISCHARGE GRILLE - COMPLETE | 1 | ACXE20C08800 | O |
| | 93 | BAG | 1 | ACXG86-04431 | |
| | 94 | BASE BOARD - COMPLETE | 1 | ACXG62C02820 | O |
| | 95 | SHOCK ABSORBER | 1 | ACXG70-15320 | O |
| | 96 | SHOCK ABSORBER | 1 | ACXG70-15330 | O |
| | 97 | C.C. CASE | 1 | ACXG50-62250 | O |

**Note:**

- All parts are supplied from PAPAMY, Malaysia (Vendor Code: 00029488).
- “O” marked parts are recommended to be kept in stock.

[PAPAMY] Printed in Malaysia
SN0425-4