Order No: PAPAMY2306063CE

Service Manual

Air-to-Water Heatpump

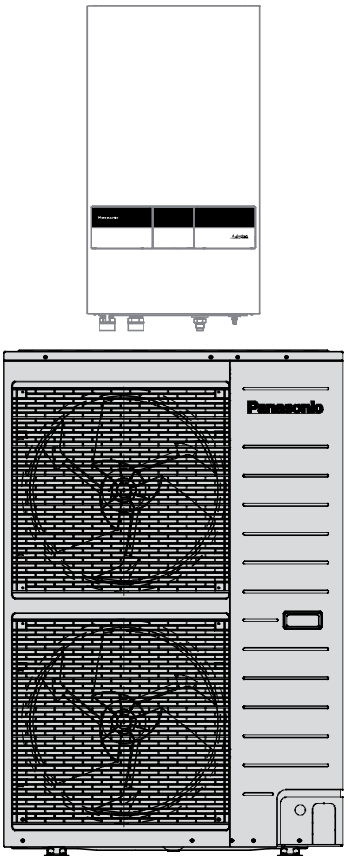

Indoor Unit	Outdoor Unit
WH-SXC09K3E5	WH-UXZ09KE5
WH-SXC09K6E5	WH-UXZ12KE5
WH-SXC12K6E5	

Destination
Europe

⚠ WARNING

This service information is designed for experienced repair technicians only and is not designed for use by the general public. It does not contain warnings or cautions to advise non-technical individuals of potential dangers in attempting to service a product. Products powered by electricity should be serviced or repaired only by experienced professional technicians. Any attempt to service or repair the products dealt with in this service information by anyone else could result in serious injury or death.

IMPORTANT SAFETY NOTICE

There are special components used in this equipment which are important for safety. These parts are marked by ⚠ in the Schematic Diagrams, Circuit Board Diagrams, Exploded Views and Replacement Parts List. It is essential that these critical parts should be replaced with manufacturer's specified parts to prevent shock, fire or other hazards. Do not modify the original design without permission of manufacturer.

⚠ PRECAUTION OF LOW TEMPERATURE

In order to avoid frostbite, be assured of no refrigerant leakage during the installation or repairing of refrigerant circuit.

⚠ CAUTION

R32 REFRIGERANT – This Air-to-Water Hydromodule + Tank contains and operates with refrigerant R32.
THIS PRODUCT MUST ONLY BE INSTALLED OR SERVICED BY QUALIFIED PERSONNEL.
Refer to National, State, Territory and local legislation, regulations, codes, installation & operation manuals, before the installation, maintenance and/or service of this product.

Panasonic®

© Panasonic Corporation 2023.

TABLE OF CONTENTS

1. Safety Precautions 4

2. Precaution For Using R32 Refrigerant 7

3. Specifications 12

3.1 WH-SXC09K3E5 WH-UXZ09KE5 12
3.2 WH-SXC09K6E5 WH-UXZ09KE5 15
3.3 WH-SXC12K6E5 WH-UXZ12KE5 18

4. Features.....21

5. Location of Controls and Components.....22

5.1 Indoor Unit 22
5.2 Outdoor Unit.....54

6. Dimensions 55

6.1 Indoor Unit 55
6.2 Outdoor Unit.....56

7. Refrigeration and Water Cycle Diagram 57

8. Block Diagram 58

8.1 WH-SXC09H3E5 WH-UX09HE5 58
8.2 WH-SXC12H6E5 WH-UX12HE5 59

9. Wiring Connection Diagram 60

9.1 Indoor Unit 60
9.2 Outdoor Unit.....62

10. Electronic Circuit Diagram 63

10.1 Indoor Unit 63
10.2 Outdoor Unit.....65

11. Printed Circuit Board 66

11.1 Indoor Unit 66
11.2 Outdoor Unit.....68

12. Installation Instruction.....70

12.1 Indoor Floor Area Requirement 70
12.2 Indoor Unit 74
12.3 Outdoor Unit.....85
12.4 Appendix 90
12.5 Service and Maintenance 119

13. Installation and Servicing Heat Pump using R32 121

13.1 About R32 Refrigerant 121
13.2 Characteristics of R32 Refrigerant.....121
13.3 Refrigerant piping installation • Tools used in services.....123
13.4 New installation, Relocation, Repairing of Refrigerant Cycle System The Procedures 127
13.5 Piping installation of R32 128
13.6 Installation and Service.....129
13.7 Repairing of refrigerant cycle / Brazing point... 132

14. Operation and Control 138

14.1 Basic Function 138
14.2 Water Pump 149
14.3 Water Pressure Control 152
14.4 Indoor Unit Safety 153
14.5 Auto Restart Control 153
14.6 Indication Panel 153
14.7 Indoor Back-Up Heater Control 154
14.8 Tank Heater Control..... 156
14.9 Base Pan Heater Control (Optional)..... 157
14.10 Force Heater Mode 157
14.11 Powerful Operation 159
14.12 Quiet Operation..... 159
14.13 Sterilization Mode 160
14.14 Outdoor Ambient Thermo OFF Control 161
14.15 Alternative Outdoor Ambient Sensor Control 161
14.16 Force DHW mode 161
14.17 SMART DHW mode..... 162
14.18 DHW Capacity Setting 162
14.19 Anti Freeze Control 163
14.20 Solar Operation (Optional)..... 164
14.21 Boiler Bivalent Control 165
14.22 External Room Thermostat Control (Optional) 167
14.23 Three Ways Valve Control..... 168
14.24 Two Ways Valve Control..... 169
14.25 External OFF/ON Control 169
14.26 External Compressor Switch (Optional PCB) 170
14.27 Heat/Cool Switch (Optional PCB)..... 171
14.28 SG Ready Control (Optional PCB) 172
14.29 Demand Control (Optional PCB) 174
14.30 Holiday Mode 174
14.31 Dry Concrete..... 175
14.32 Flow Sensor 175

15. Protection Control 176

15.1 Protection Control for All Operations 176
15.2 Protection Control for Heating Operation..... 178
15.3 Protection Control for Cooling Operation..... 179

16. Servicing Mode 180

16.1 How to Take Out Front Plate 180
16.2 Test Run 180
16.3 Expansion Vessel ⑫ Pre Pressure Checking. 180
16.4 Pump Down Procedures 181
16.5 How To Adjust Pump Speed..... 182
16.6 How To Unlock Cool Mode 183
16.7 EEPROM Factory Default Data Setup Procedure 184
16.8 Dry Concrete Setup 185

17. Maintenance Guide..... 187

17.1 Maintenance for Magnetic Water Filter Set 189

18. Troubleshooting Guide 192

18.1 Refrigeration Cycle System 192
18.2 Relationship between the Condition of the Air-to-Water Heatpump Indoor and Outdoor Units and Pressure and Electric Current..... 193
18.3 Breakdown Self Diagnosis Function 194
18.4 Error Codes Table..... 196

18.5 Self-diagnosis Method 198

19. Disassembly and Assembly Instructions 250

19.1 To Remove Front Plate 250
19.2 To Open Control Board Cover.....250
19.3 To Remove Control Panel 251
19.4 To Remove RCCB.....251
19.5 To Remove Transformer and Electronic Controller Board.....252
19.6 To Open Control Board 252
19.7 To Remove Pressure Relief Valve, Air Purge Valve and Flow Sensor.....253
19.8 To Remove Water Pump and Bottle Complete 254
19.9 To Remove Water Filter 255

20. Technical Data 256

20.1 Operation Characteristics 256
20.2 Heating Capacity Table 268
20.3 Cooling Capacity Table 268

21. Exploded View and Replacement Parts List 269

21.1 Indoor Unit 269
21.2 Outdoor Unit 277

- Specifications, designs and contents in this Service Manual are subject to change without notice.

1. Safety Precautions

- Read the following “SAFETY PRECAUTIONS” carefully before installation.
- Electrical works and water installation works must be done by licensed electrician and licensed water system installer respectively. Be sure to use the correct rating and main circuit for the model to be installed.
- The caution items stated here must be followed because these important contents are related to safety. The meaning of each indication used is as below. Incorrect installation due to ignoring of the instruction will cause harm or damage, and the seriousness is classified by the following indications.
- Please leave this installation manual with the unit after installation.

⚠ **WARNING**	This indication shows the possibility of causing death or serious injury.
⚠ **CAUTION**	This indication shows the possibility of causing injury or damage to properties only.

The items to be followed are classified by the symbols:

⃠	Symbol with white background denotes item that is PROHIBITED from doing.
❗ ⏚	Symbol with dark background denotes item that must be carried out.

- Carry out test run to confirm that no abnormality occurs after the installation. Then, explain to user the operation, care and maintenance as stated in instructions. Please remind the customer to keep the operating instructions for future reference.
- If there is any doubt about the installation procedure or operation, always contact the authorized dealer for advice and information.

⚠ **WARNING**	
1. Do not use means to accelerate the defrosting process or to clean, other than those recommended by the manufacturer. Any unfit method or using incompatible material may cause product damage, burst and serious injury.	⃠
2. Do not install outdoor unit near handrail of veranda. When installing outdoor unit at veranda of high rise building, child may climb up to outdoor unit and cross over the handrail and causing accident.	⃠
3. Do not use unspecified cord, modified cord, joint cord or extension cord for power supply cord. Do not share the single outlet with other electrical appliances. Poor contact, poor insulation or over current will cause electrical shock or fire.	⃠
4. Do not tie up the power supply cord into a bundle by band. Abnormal temperature rise on power supply cord may happen.	⃠
5. Do not insert your fingers or other objects into the unit, high speed rotating fan may cause injury.	⃠
6. Do not sit or step on the unit, you may fall down accidentally.	⃠
7. Keep plastic bag (packaging material) away from small children, it may cling to nose and mouth and prevent breathing.	⃠
8. When install or relocate outdoor unit, do not let any substance other than the specified refrigerant, e.g. air etc. mix into refrigerant cycle (piping). Mixing of air etc. will cause abnormal high pressure in refrigeration cycle and result in explosion, injury etc.	⃠
9. Do not use pipe wrench to install refrigerant piping. It might deform the piping and cause the unit to malfunction.	⃠
10. Do not purchase unauthorized electrical parts for installation, service, maintenance and etc.. They might cause electrical shock or fire.	⃠
11. Do not modify the wiring of Indoor Unit / Outdoor Unit for installation of other components (i.e. heater, etc). Overloaded wiring or wire connection points may cause electrical shock or fire.	⃠
12. Do not pierce or burn as the appliance is pressurized. Do not expose the appliance to heat, flame, sparks, or other sources of ignition. Else, it may explode and cause injury or death.	⃠
13. Do not add or replace refrigerant other than specified type. It may cause product damage, burst and injury etc.	⃠
14. Do not use joint cable for Indoor / Outdoor Unit connection cable. Use specified Indoor / Outdoor Unit connection cable, refer to instruction 5 **CONNECT THE CABLE TO THE INDOOR UNIT** and connect tightly for Indoor / Outdoor Unit connection. Clamp the cable so that no external force will be acted on the terminal. If connection or fixing is not perfect, it will cause heat up or fire at the connection.	⃠
15. For electrical work, follow the national regulation, legislation and this installation instructions. An independent circuit and single outlet must be used. If electrical circuit capacity is not enough or defect found in the electrical work, it will cause electrical shock or fire.	❗
16. For electrical work, follow local wiring standard, regulation and this installation instruction. An independent circuit and single outlet must be used. If electrical circuit capacity is not enough or defect found in electrical work, it will cause electrical shock or fire.	❗
17. For water circuit installation work, follow to relevant European and national regulations (including EN61770) and local plumbing and building regulation codes.	❗
18. Engage authorized dealer or specialist for installation. If installation done by the user is incorrect, it will cause water leakage, electrical shock or fire.	❗
19. Engage dealer or specialist for installation. If installation done by the user is defective, it will cause water leakage, electrical shock or fire.	❗

⚠ WARNING	
20. • This is a R32 model, use piping, flare nut and tools which is specified for R32 refrigerant. Using of existing (R22) piping, flare nut and tools may cause abnormally high pressure in the refrigerant cycle (piping), and possibly result in explosion and injury. • Thickness for copper pipes used with R32 must be more than 0.8 mm. Never use copper pipes thinner than 0.8 mm. • It is desirable that the amount of residual oil is less than 40mg/10m.	
21. When install or relocate Indoor Unit, do not let any substance other than the specified refrigerant, e.g. air etc. mix into refrigerant cycle (piping). Mixing of air etc. will cause abnormal high pressure in refrigeration cycle and result in explosion, injury etc.	
22. For refrigeration system work, install according to this installation instructions strictly. If installation is defective, it will cause water leakage, electrical shock or fire.	
23. Install at a strong and firm location which is able to withstand weight of the set. If the strength is not enough or installation is not properly done, the set will drop and cause injury.	
24. Do not use joint cable for outdoor connection cable. Use specified outdoor connection cable, refer to instruction ⑤ **CONNECT THE CABLE TO THE OUTDOOR UNIT** and connect tightly for outdoor connection. Clamp the cable so that no external force will be acted on the terminal. If connection or fixing is not perfect, it will cause heat up or fire at the connection.	
25. Wire routing must be properly arranged so that control board cover is fixed properly. If control board cover is not fixed perfectly, it will cause fire or electrical shock.	
26. This equipment is strongly recommended to be installed with Residual Current Device (RCD) on-site according to the respective national wiring rules or country–specific safety measures in terms of residual current.	
27. During installation, install the refrigerant piping properly before running the compressor. Operation of compressor without fixing refrigeration piping and valves at opened condition will cause suck-in of air, abnormal high pressure in refrigeration cycle and result in explosion, injury etc.	
28. During pump down operation, stop the compressor before removing the refrigeration piping. Removal of refrigeration piping while compressor is operating and valves are opened will cause suck-in of air, abnormal high pressure in refrigeration cycle and result in explosion, injury etc.	
29. Tighten the flare nut with torque wrench according to specified method. If the flare nut is over tightened, after a long period, the flare may break and cause refrigerant gas leakage.	
30. After completion of installation, confirm there is no leakage of refrigerant gas. It may generate toxic gas when the refrigerant contacts with fire.	
31. Ventilate if there is refrigerant gas leakage during operation. It may cause toxic gas when the refrigerant contacts with fire.	
32. Ventilate the room if there is refrigerant gas leakage during operation. Extinguish all fire sources if present. It may cause toxic gas when the refrigerant contacts with fire.	
33. Use the attached accessories parts and specified parts for installation. Otherwise, it will cause the set to fall, water leakage, fire or electrical shock.	
34. Only use the supplied or specified installation parts. Else, it may cause unit vibrate loose, water leakage, electrical shock or fire.	
35. The unit is only for use in closed water system. Utilization in an open water circuit may lead to excessive corrosion of water piping and risk of incubating bacteria colonies, particularly Legionella, in water.	
36. Select a location where in case of water leakage, the leakage will not cause damage to other properties.	
37. If there is any doubt about the installation procedure or operation, always contact the authorized dealer for advice and information.	
38. When installing electrical equipment at wooden building of metal lath or wire lath, in accordance with electrical facility standard, no electrical contact between equipment and building is allowed. Insulator must be installed in between.	
39. Any work carried out on the Indoor Unit / Outdoor Unit after removing any panels which is secured by screws, must be carried out under the supervision of authorized dealer and licensed installation contractor.	
40. This system is multi supply appliance. All circuits must be disconnected before accessing the unit terminals.	
41. The piping installation work must be flushed before Indoor Unit is connected to remove contaminants. Contaminants may damage the Indoor Unit components.	
42. This installation may be subjected to building regulation approval applicable to respective country that may require to notify the local authority before installation.	
43. Be aware that refrigerants may not contain an odour.	
44. This equipment must be properly earthed. Earth line must not be connected to gas pipe, water pipe, earth of lightning rod and telephone. Otherwise, it may cause electrical shock in case of equipment breakdown or insulation breakdown.	
45. This unit must be properly earthed. The electrical earth must not be connected to a gas pipe, water pipe, the earth of lightening rod or a telephone. Otherwise there is a danger of electrical shock in the event of an insulation breakdown or electrical earth fault in the outdoor unit.	

⚠ CAUTION	
1. Do not install the Indoor Unit / Outdoor Unit at place where leakage of flammable gas may occur. In case gas leaks and accumulates at surrounding of the unit, it may cause fire.	⊘
2. Prevent liquid or vapor from entering sumps or sewers since vapor is heavier than air and may form suffocating atmospheres.	⊘
3. Do not release refrigerant during piping work for installation, re-installation and during repairing a refrigeration parts. Take care of the liquid refrigerant, it may cause frostbite.	⊘
4. Do not install this appliance in a laundry room or other high humidity location. This condition will cause rust and damage to the unit.	⊘
5. Make sure the insulation of power supply cord does not contact hot part (i.e. refrigerant piping) to prevent from insulation failure (melt).	⊘
6. Do not apply excessive force to water pipes that may damage the pipes. If water leakage occurs, it will cause flooding and damage to other properties.	⊘
7. Do not touch the sharp aluminium fin, sharp parts may cause injury.	!
8. Select an installation location which is easy for maintenance. Incorrect installation, service or repair of this Indoor Unit / Outdoor Unit may increase the risk of rupture and this may result in loss or damage of property or injury.	!
9. Carry out drainage piping as mentioned in installation instructions. If drainage is not perfect, water may enter the room and damage the furniture.	!
10. Power supply connection to Indoor Unit. • Power supply point should be in easily accessible place for power disconnection in case of emergency. • Must follow local national wiring standard, regulation and this installation instruction. • Strongly recommended to make permanent connection to a circuit breaker. For Unit WH-SDC0309K3E5: - Power Supply 1: For WH-UDZ03KE5* and WH-UDZ05KE5*, use approved 15/16A 2-poles circuit breaker with a minimum contact gap of 3.0mm. For WH-UDZ07KE5* and WH-UDZ09KE5*, use approved 25A 2-poles circuit breaker with a minimum contact gap of 3.0mm. - Power Supply 2: Use approved 16A 2-poles circuit breaker with a minimum contact gap of 3.0mm. For Unit WH-SDC0309K6E5: - Power Supply 1: For WH-UDZ03KE5* and WH-UDZ05KE5*, use approved 15/16A 2-poles circuit breaker with a minimum contact gap of 3.0mm. For WH-UDZ07KE5* and WH-UDZ09KE5*, use approved 25A 2-poles circuit breaker with a minimum contact gap of 3.0mm. - Power Supply 2: Use approved 30A 2-poles circuit breaker with a minimum contact gap of 3.0mm. For WH-SXC09K3E5: - Power Supply 1: Use approved 30A 2-poles circuit breaker with a minimum contact gap of 3.0mm. - Power Supply 2: Use approved 16A 2-poles circuit breaker with a minimum contact gap of 3.0mm. For WH-SXC09K6E5 & WH-SXC12K6E5: - Power Supply 1: Use approved 30A 2-poles circuit breaker with a minimum contact gap of 3.0mm. - Power Supply 2: Use approved 30A 2-poles circuit breaker with a minimum contact gap of 3.0mm.	!
11. Ensure the correct polarity is maintained throughout all wiring. Otherwise, it will cause electrical shock or fire.	!
12. After installation, check the water leakage condition in connection area during test run. If leakage occurs, it will cause damage to other properties.	!
13. Installation work. It may need two or more people to carry out the installation work. The weight of Indoor Unit / Outdoor Unit might cause injury if carried by one person.	!
14. Keep any required ventilation openings clear of obstruction.	!

2. Precaution For Using R32 Refrigerant

- The basic installation work procedures are the same as conventional refrigerant (R410A, R22) models. However, pay careful attention to the following points:

	⚠ WARNING	
1.	Since the working pressure is higher than that of refrigerant R22 models, some of the piping and installation and service tools are special. Especially, when replacing a refrigerant R22 model with a new refrigerant R32 model, always replace the conventional piping and flare nuts with the R32 and R410A piping and flare nuts on the outdoor unit side. For R32 and R410A, the same flare nut on the outdoor unit side and pipe can be used.	❗
2.	The mixing of different refrigerants within a system is prohibited. Models that use refrigerant R32 and R410A have a different charging port thread diameter to prevent erroneous charging with refrigerant R22 and for safety. Therefore, check beforehand. [The charging port thread diameter for R32 and R410A is 12.7 mm (1/2 inch).]	❗
3.	Ensure that foreign matter (oil, water, etc.) does not enter the piping. Also, when storing the piping, securely seal the opening by pinching, taping, etc. (Handling of R32 is similar to R410A.)	❗
4.	Operation, maintenance, repairing and refrigerant recovery should be carried out by trained and certified personnel in the use of flammable refrigerants and as recommended by the manufacturer. Any personnel conducting an operation, servicing or maintenance on a system or associated parts of the equipment should be trained and certified.	❗
5.	Any part of refrigerating circuit (evaporators, air coolers, AHU, condensers or liquid receivers) or piping should not be located in the proximity of heat sources, open flames, operating gas appliance or an operating electric heater.	❗
6.	The user/owner or their authorized representative shall regularly check the alarms, mechanical ventilation and detectors, at least once a year, where as required by national regulations, to ensure their correct functioning.	❗
7.	A logbook shall be maintained. The results of these checks shall be recorded in the logbook.	❗
8.	In case of ventilations in occupied spaces shall be checked to confirm no obstruction.	❗
9.	Before a new refrigerating system is put into service, the person responsible for placing the system in operation should ensure that trained and certified operating personnel are instructed on the basis of the instruction manual about the construction, supervision, operation and maintenance of the refrigerating system, as well as the safety measures to be observed, and the properties and handling of the refrigerant used.	❗
10.	The general requirement of trained and certified personnel are indicated as below: a) Knowledge of legislation, regulations and standards relating to flammable refrigerants; and, b) Detailed knowledge of and skills in handling flammable refrigerants, personal protective equipment, refrigerant leakage prevention, handling of cylinders, charging, leak detection, recovery and disposal; and, c) Able to understand and to apply in practice the requirements in the national legislation, regulations and Standards; and, d) Continuously undergo regular and further training to maintain this expertise.	❗
11.	Air-to-Water Heatpump piping in the occupied space shall be installed in such a way to protect against accidental damage in operation and service.	❗
12.	Precautions shall be taken to avoid excessive vibration or pulsation to refrigerating piping.	❗
13.	Ensure protection devices, refrigerating piping and fittings are well protected against adverse environmental effects (such as the danger of water collecting and freezing in relief pipes or the accumulation of dirt and debris).	❗
14.	Expansion and contraction of long runs piping in refrigerating systems shall be designed and installed securely (mounted and guarded) to minimize the likelihood hydraulic shock damaging the system.	❗
15.	Protect the refrigerating system from accidental rupture due to moving furniture or reconstruction activities.	❗
16.	To ensure no leaking, field-made refrigerant joints indoors shall be tightness tested. The test method shall have a sensitivity of 5 grams per year of refrigerant or better under a pressure of at least 0,25 times the maximum allowable pressure (>1.04MPa, max 4.15MPa). No leak shall be detected.	❗

CAUTION

1. Installation (Space)
   - Must ensure the installation of pipe-work shall be kept to a minimum. Avoid use dented pipe and do not allow acute bending.
   - Must ensure that pipe-work shall be protected from physical damage.
   - Must comply with national gas regulations, state municipal rules and legislation. Notify relevant authorities in accordance with all applicable regulations.
   - Must ensure mechanical connections be accessible for maintenance purposes.
   - In cases that require mechanical ventilation, ventilation openings shall be kept clear of obstruction.
   - When disposal of the product, do follow to the precautions in #12 and comply with national regulations.
   - In case of field charge, the effect on refrigerant charge caused by the different pipe length has to be quantified, measured and labelled.
   - Always contact to local municipal offices for proper handling.

2. Servicing

   2-1. Service personnel
   - Any qualified person who is involved with working on or breaking into a refrigerant circuit should hold a current valid certificate from an industry-accredited assessment authority, which authorizes their competence to handle refrigerants safely in accordance with an industry recognized assessment specification.
   - Servicing shall only be performed as recommended by the equipment manufacturer. Maintenance and repair requiring the assistance of other skilled personnel shall be carried out under the supervision of the person competent in the use of flammable refrigerants.
   - Servicing shall be performed only as recommended by the manufacturer.
   - The system is inspected, regularly supervised and maintained by a trained and certified service personnel who is employed by the person user or party responsible.
   - Ensure the actual refrigerant charge is in accordance with the room size within which the refrigerant containing parts are installed.
   - Ensure refrigerant charge not to leak.

   2-2. Work
   - Prior to beginning work on systems containing flammable refrigerants, safety checks are necessary to ensure that the risk of ignition is minimised.
     For repair to the refrigerating system, the precautions in #2-2 to #2-8 must be followed before conducting work on the system.
   - Work shall be undertaken under a controlled procedure so as to minimize the risk of a flammable gas or vapour being present while the work is being performed.
   - All maintenance staff and others working in the local area shall be instructed and supervised on the nature of work being carried out.
   - Avoid working in confined spaces. Always ensure away from source, at least 2 meter of safety distance, or zoning of free space area of at least 2 meter in radius.
   - Wear appropriate protective equipment, including respiratory protection, as conditions warrant.
   - Keep all sources of ignition and hot metal surfaces away.

   2-3. Checking for presence of refrigerant
   - The area shall be checked with an appropriate refrigerant detector prior to and during work, to ensure the technician is aware of potentially flammable atmospheres.
   - Ensure that the leak detection equipment being used is suitable for use with flammable refrigerants, i.e. non sparking, adequately sealed or intrinsically safe.
   - In case of leakage/spillage happened, immediately ventilate area and stay upwind and away from spill/release.
   - In case of leakage/spillage happened, do notify persons down wind of the leaking/spill, isolate immediate hazard area and keep unauthorized personnel out.

   2-4. Presence of fire extinguisher
   - If any hot work is to be conducted on the refrigerating equipment or any associated parts, appropriate fire extinguishing equipment shall be available at hand.
   - Have a dry powder or CO_2 fire extinguisher adjacent to the charging area.

   2-5. No ignition sources
   - No person carrying out work in relation to a refrigerating system which involves exposing any pipe work that contains or has contained flammable refrigerant shall use any sources of ignition in such a manner that it may lead to the risk of fire or explosion. He/She must not be smoking when carrying out such work.
   - All possible ignition sources, including cigarette smoking, should be kept sufficiently far away from the site of installation, repairing, removing and disposal, during which flammable refrigerant can possibly be released to the surrounding space.
   - Prior to work taking place, the area around the equipment is to be surveyed to make sure that there are no flammable hazards or ignition risks.
   - “No Smoking” signs shall be displayed.

   2-6. Ventilated area
   - Ensure that the area is in the open or that it is adequately ventilated before breaking into the system or conducting any hot work.
   - A degree of ventilation shall continue during the period that the work is carried out.
   - The ventilation should safely disperse any released refrigerant and preferably expel it externally into the atmosphere.

⚠ CAUTION	
2.	2-7. Checks to the refrigerating equipment • Where electrical components are being changed, they shall be fit for the purpose and to the correct specification. • At all times the manufacturer's maintenance and service guidelines shall be followed. • If in doubt consult the manufacturer's technical department for assistance. • The following checks shall be applied to installations using flammable refrigerants. - The actual refrigerant charge is in accordance with the room size within which the refrigerant containing parts are installed. - The ventilation machinery and outlets are operating adequately and are not obstructed. - If an indirect refrigerating circuit is being used, the secondary circuit shall be checked for the presence of refrigerant. - Marking to the equipment continues to be visible and legible. Markings and signs that are illegible shall be corrected. - Refrigerating pipe or components are installed in a position where they are unlikely to be exposed to any substance which may corrode refrigerant containing components, unless the components are constructed of materials which are inherently resistant to being corroded or are properly protected against being so corroded. 2-8. Checks to electrical devices • Repair and maintenance to electrical components shall include initial safety checks and component inspection procedures. • Initial safety checks shall include but not limit to:- - That capacitors are discharged: this shall be done in a safe manner to avoid possibility of sparking. - That there is no live electrical components and wiring are exposed while charging, recovering or purging the system. - That there is continuity of earth bonding. • At all times the manufacturer's maintenance and service guidelines shall be followed. • If in doubt consult the manufacturer's technical department for assistance. • If a fault exists that could compromise safety, then no electrical supply shall be connected to the circuit until it is satisfactorily dealt with. • If the fault cannot be corrected immediately but it is necessary to continue operation, an adequate temporary solution shall be used. • The owner of the equipment must be informed or reported so all parties are advised thereinafter.
3.	Repairs to sealed components • During repairs to sealed components, all electrical supplies shall be disconnected from the equipment being worked upon prior to any removal of sealed covers, etc. • If it is absolutely necessary to have an electrical supply to equipment during servicing, then a permanently operating form of leak detection shall be located at the most critical point to warn of a potentially hazardous situation. • Particular attention shall be paid to the following to ensure that by working on electrical components, the casing is not altered in such a way that the level of protection is affected. This shall include damage to cables, excessive number of connections, terminals not made to original specification, damage to seals, incorrect fitting of glands, etc. • Ensure that apparatus is mounted securely. • Ensure that seals or sealing materials have not degraded such that they no longer serve the purpose of preventing the ingress of flammable atmospheres. • Replacement parts shall be in accordance with the manufacturer's specifications. NOTE: The use of silicon sealant may inhibit the effectiveness of some types of leak detection equipment. Intrinsically safe components do not have to be isolated prior to working on them.
4.	Repair to intrinsically safe components • Do not apply any permanent inductive or capacitance loads to the circuit without ensuring that this will not exceed the permissible voltage and current permitted for the equipment in use. • Intrinsically safe components are the only types that can be worked on while live in the presence of a flammable atmosphere. • The test apparatus shall be at the correct rating. • Replace components only with parts specified by the manufacturer. Unspecified parts by manufacturer may result ignition of refrigerant in the atmosphere from a leak.
5.	Cabling • Check that cabling will not be subject to wear, corrosion, excessive pressure, vibration, sharp edges or any other adverse environmental effects. • The check shall also take into account the effects of aging or continual vibration from sources such as compressors or fans.
6.	Detection of flammable refrigerants • Under no circumstances shall potential sources of ignition be used in the searching or detection of refrigerant leaks. • A halide torch (or any other detector using a naked flame) shall not be used.

CAUTION

7.

The following leak detection methods are deemed acceptable for all refrigerant systems.

- No leaks shall be detected when using detection equipment with a sensitivity of 5 grams per year of refrigerant or better under a pressure of at least 0,25 times the maximum allowable pressure (>1.04MPa, max 4.15MPa). For example, a universal sniffer.
- Electronic leak detectors may be used to detect flammable refrigerants, but the sensitivity may not be adequate, or may need re-calibration.
  (Detection equipment shall be calibrated in a refrigerant-free area.)
- Ensure that the detector is not a potential source of ignition and is suitable for the refrigerant used.
- Leak detection equipment shall be set at a percentage of the LFL of the refrigerant and shall be calibrated to the refrigerant employed and the appropriate percentage of gas (25 % maximum) is confirmed.
- Leak detection fluids are also suitable for use with most refrigerants, for example, bubble method and fluorescent method agents. The use of detergents containing chlorine shall be avoided as the chlorine may react with the refrigerant and corrode the copper pipe-work.
- If a leak is suspected, all naked flames shall be removed/extinguished.
- If a leakage of refrigerant is found which requires brazing, all of the refrigerant shall be recovered from the system, or isolated (by means of shut off valves) in a part of the system remote from the leak.
  The precautions in #8 must be followed to remove the refrigerant.

8.

Removal and evacuation

- When breaking into the refrigerant circuit to make repairs – or for any other purpose – conventional procedures shall be used. However, it is important that best practice is followed since flammability is a consideration.
  The following procedure shall be adhered to:

  • remove refrigerant -> • purge the circuit with inert gas -> • evacuate -> • purge with inert gas ->
  • open the circuit by cutting or brazing

- The refrigerant charge shall be recovered into the correct recovery cylinders.
- The system shall be purged with OFN to render the appliance safe. (remark: OFN = oxygen free nitrogen, type of inert gas)
- This process may need to be repeated several times.
- Compressed air or oxygen shall not be used for this task.
- Purging shall be achieved by breaking the vacuum in the system with OFN and continuing to fill until the working pressure is achieved, then venting to atmosphere, and finally pulling down to a vacuum.
- This process shall be repeated until no refrigerant is within the system.
- When the final OFN charge is used, the system shall be vented down to atmospheric pressure to enable work to take place.
- This operation is absolutely vital if brazing operations on the pipe work are to take place.
- Ensure that the outlet for the vacuum pump is not close to any potential ignition sources and there is ventilation available.

9.

Charging procedures

- In addition to conventional charging procedures, the following requirements shall be followed.
  - Ensure that contamination of different refrigerants does not occur when using charging equipment.
  - Hoses or lines shall be as short as possible to minimize the amount of refrigerant contained in them.
  - Cylinders shall be kept in an appropriate position according to the instructions.
  - Ensure that the refrigerating system is earthed prior to charging the system with refrigerant.
  - Label the system when charging is complete (if not already).
  - Extreme care shall be taken not to over fill the refrigerating system.
- Prior to recharging the system it shall be pressure tested with OFN (refer to #7).
- The system shall be leak tested on completion of charging but prior to commissioning.
- A follow up leak test shall be carried out prior to leaving the site.
- Electrostatic charge may accumulate and create a hazardous condition when charging and discharging the refrigerant. To avoid fire or explosion, dissipate static electricity during transfer by grounding and bonding containers and equipment before charging/discharging.

CAUTION

10.

Decommissioning

- Before carrying out this procedure, it is essential that the technician is completely familiar with the equipment and all its details.
- It is recommended good practice that all refrigerants are recovered safely.
- Prior to the task being carried out, an oil and refrigerant sample shall be taken in case analysis is required prior to re-use of recovered refrigerant.
- It is essential that electrical power is available before the task is commenced.
  a) Become familiar with the equipment and its operation.
  b) Isolate system electrically.
  c) Before attempting the procedure ensure that:

  • mechanical handling equipment is available, if required, for handling refrigerant cylinders;
  • all personal protective equipment is available and being used correctly;
  • the recovery process is supervised at all times by a competent person;
  • recovery equipment and cylinders conform to the appropriate standards.

  d) Pump down refrigerant system, if possible.
  e) If a vacuum is not possible, make a manifold so that refrigerant can be removed from various parts of the system.
  f) Make sure that cylinder is situated on the scales before recovery takes place.
  g) Start the recovery machine and operate in accordance with instructions.
  h) Do not over fill cylinders. (No more than 80 % volume liquid charge).
  i) Do not exceed the maximum working pressure of the cylinder, even temporarily.
  j) When the cylinders have been filled correctly and the process completed, make sure that the cylinders and the equipment are removed from site promptly and all isolation valves on the equipment are closed off.
  k) Recovered refrigerant shall not be charged into another refrigerating system unless it has been cleaned and checked.
- Electrostatic charge may accumulate and create a hazardous condition when charging or discharging the refrigerant.
  To avoid fire or explosion, dissipate static electricity during transfer by grounding and bonding containers and equipment before charging/discharging.

11.

Labelling

- Equipment shall be labelled stating that it has been de-commissioned and emptied of refrigerant.
- The label shall be dated and signed.
- Ensure that there are labels on the equipment stating the equipment contains flammable refrigerant.

12.

Recovery

- When removing refrigerant from a system, either for servicing or decommissioning, it is recommended good practice that all refrigerants are removed safely.
- When transferring refrigerant into cylinders, ensure that only appropriate refrigerant recovery cylinders are employed.
- Ensure that the correct number of cylinders for holding the total system charge are available.
- All cylinders to be used are designated for the recovered refrigerant and labelled for that refrigerant (i.e. special cylinders for the recovery of refrigerant).
- Cylinders shall be complete with pressure relief valve and associated shut-off valves in good working order.
- Recovery cylinders are evacuated and, if possible, cooled before recovery occurs.
- The recovery equipment shall be in good working order with a set of instructions concerning the equipment that is at hand and shall be suitable for the recovery of flammable refrigerants.
- In addition, a set of calibrated weighing scales shall be available and in good working order.
- Hoses shall be complete with leak-free disconnect couplings and in good condition.
- Before using the recovery machine, check that it is in satisfactory working order, has been properly maintained and that any associated electrical components are sealed to prevent ignition in the event of a refrigerant release.
  Consult manufacturer if in doubt.
- The recovered refrigerant shall be returned to the refrigerant supplier in the correct recovery cylinder, and the relevant Waste Transfer Note arranged.
- Do not mix refrigerants in recovery units and especially not in cylinders.
- If compressors or compressor oils are to be removed, ensure that they have been evacuated to an acceptable level to make certain that flammable refrigerant does not remain within the lubricant.
- The evacuation process shall be carried out prior to returning the compressor to the suppliers.
- Only electric heating to the compressor body shall be employed to accelerate this process.
- When oil is drained from a system, it shall be carried out safely.

3. Specifications

3.1 WH-SXC09K3E5 WH-UXZ09KE5

Item		Unit	Outdoor Unit		
Performance Test Condition			EN 14511 / EN14825		
Cooling Capacity		Condition (Ambient/Water)	A35W7		
		kW	8.80		
		BTU/h	30000		
		kcal/h	7570		
Cooling EER		W/W	3.11		
		kcal/hW	2.67		
Heating Capacity		Condition (Ambient/Water)	A7W35	A2W35	
		kW	9.00	9.00	
		BTU/h	30700	30700	
		kcal/h	7740	7740	
Heating COP		W/W	5.03	3.69	
		kcal/hW	4.32	3.17	
Heating ErP	Low Temperature Application (W35)		Warmer	Average	Colder
	Application	Climate			
	Pdesign	kW	9.0	9.0	11.0
	Tbivalent / TOL	°C	2 / 2	-10 / -10	-15 / -22
	SCOP / ns	(W/W) / %	6.47 / 256	4.96 / 195	4.31 / 169
	Annual Consumption	kWh	1859	3747	6289
	Class		A+++	A+++	A++
	Medium Temperature Application (W55)		Warmer	Average	Colder
	Application	Climate			
	Pdesign	kW	9.0	9.0	11.0
	Tbivalent / TOL	°C	2 / 2	-10 / -10	-15 / -22
	SCOP / ns	(W/W) / %	4.34 / 171	3.57 / 140	3.26 / 127
	Annual Consumption	kWh	2772	5208	8327
	Class		A+++	A++	A++
Noise Level		Condition (Ambient/Water)	A35W7	A7W35	A2W35
		dB (A)	Cooling: 49	Heating: 51	-
		Power Level dB	Cooling: 67	Heating: 68 / 65	-
Air Flow		m^3/min (ft^3/min)	Cooling: 85.3 (3010) Heating: 64.9 (2290)		
Refrigeration Control Device			Expansion Valve		
Refrigeration Oil		cm^3	FV50S (1300)		
Refrigerant (R32)		kg (oz)	1.60 (56.5) Precharge amount 2.20 (77.7) Maximum amount		
F-GAS	GWP		675		
	CO_2eq (ton) (Precharged / Maximum)		1.080 / 1.485		
Dimension	Height	mm (inch)	1340 (52-25/32)		
	Width	mm (inch)	900 (35-14/32)		
	Depth	mm (inch)	320 (11-24/32)		
Net Weight		kg (lbs)	88 (194)		
Pipe Diameter	Liquid	mm (inch)	6.35 (1/4)		
	Gas	mm (inch)	12.70 (1/2)		

Item		Unit	Outdoor Unit		
Standard Length		m (ft)	7 (23.0)		
Pipe Length Range		m (ft)	3 (9.8) ~ 30 (98.4)		
I/D & O/D Height Difference		m (ft)	20 (65.6)		
Additional Gas Amount		g/m (oz/ft)	30 (0.3)		
Refrigeration Charge Less		m (ft)	10 (32.8)		
Compressor	Type		Hermetic Motor		
	Motor Type		Brushless (6-poles)		
	Rated Output	kW	3.00		
Fan	Type		Propeller Fan		
	Material		PP		
	Motor Type		DC (8-poles)		
	Input Power	W	-		
	Output Power	W	60		
	Fan Speed	rpm	Cooling: 550 (Top), 590 (Bottom) Heating: 440 (Top), 480 (Bottom)		
Heat Exchanger	Fin material		Aluminium (Pre Coat)		
	Fin Type		Corrugated Fin		
	Row × Stage × FPI		2 × 62 × 19		
	Size (W × H × L)	mm	903.7 × 1302 × 36.38		
Power Source (Phase, Voltage, Cycle)		ø	Single		
		V	230		
		Hz	50		
Input Power		Condition (Ambient/Water)	A35W7	A7W35	A2W35
		kW	Cooling: 2.83	Heating: 1.79	Heating: 2.44
Maximum Input Power For Heatpump System		kW	6.40		
Power Supply 1 : Phase (Ø) / Max. Current (A) / Max. Input Power (W)			1Ø / 29.0 / 6.40k		
Power Supply 2 : Phase (Ø) / Max. Current (A) / Max. Input Power (W)			1Ø / 13.0 / 3.00k		
Power Supply 3 : Phase (Ø) / Max. Current (A) / Max. Input Power (W)			- / - / -		
Starting Current		A	8.5		
Running Current		Condition (Ambient/Water)	A35W7	A7W35	A2W35
		A	Cooling: 13.2	Heating: 8.5	Heating: 11.4
Maximum Current For Heatpump System		A	29.0		
Power Factor Power factor means total figure of compressor and outdoor fan motor.		%	Cooling: 93	Heating: 92	Heating: 93
Power Cord	Number of core		-		
	Length	m (ft)	-		
Thermostat			Electronic Control		
Protection Device			Electronic Control		

Item		Unit	Indoor Unit		
Performance Test Condition			EN 14511 / EN14825		
Operation Range	Outdoor Ambient	°C	Cooling: 10 ~ 43 Heating: -28 ~ 35		
	Water Outlet	°C	Cooling: 5 ~ 20 Heating: 20 ~ 55 (Below Ambient -15°C) 20 ~ 60 (Below Ambient -10°C)		
Internal Pressure Differential		kPa	Cooling: 27.0 Heating: 28.0		
Noise Level		Condition (Ambient/Water)	A35W7	A7W35	A2W35
		dB (A)	Cooling: 33	Heating: 33	-
		Power Level dB	Cooling: 46	Heating: 46	-
Dimension	Height	mm (inch)	892 (35-1/8)		
	Width	mm (inch)	500 (19-11/16)		
	Depth	mm (inch)	348 (13-23/32)		
Net Weight		kg (lbs)	40 (88)		
Refrigerant Pipe Diameter	Liquid	mm (inch)	6.35 (1/4)		
	Gas	mm (inch)	12.70 (1/2)		
Water Pipe Diameter	Inlet	mm (inch)	(1-1/4)		
	Outlet	mm (inch)	(1-1/4)		
Water Drain Hose Inner Diameter		mm (inch)	12 (17/36)		
Pump	Motor Type		DC Motor		
	No. of Speed		7 (Software Selection)		
	Input Power	W	145		
Hot Water Coil	Type		Brazed Plate		
	No. of Plates		36		
	Size (W × H × L)	mm	68 × 333 × 121		
	Water Flow Rate	l/min (m^3/h)	Cooling: 25.2 (1.5) Heating: 25.8 (1.5)		
Pressure Relief Valve Water Circuit		kPa	Open: 300, Close: 210 and below		
Flow Switch			Electronic Sensor		
Protection Device		A	Residual Current Circuit Breaker (40)		
Expansion Vessel	Volume	l	10		
	MWP	bar	3		
Capacity of Integrated Electric Heater		kW	3.00		

Note:

- In case it is necessary to indicate the air flow volume in (l/s), the value in (m^3/min.) shall be multiplied by 16.7 and rounded down the decimal point.
- If the EUROVENT Certified models can be operated under the “extra-low” temperature condition, -7°C DB and -8°C WB temperature with rated voltage 230V shall be used.
- Capacity is measured at outdoor temperature 7°C DB and 6°C WB with controlled water inlet 30°C and water outlet 35°C (EN 14511-2)
- Flowrate indicated are based on nominal capacity adjustment of leaving water temperature (LWT) 35°C and ΔT=5°C.
- EER and COP classification is at 230V only in occordance with EU directive 2003/32/EC.
- ** Between outdoor ambient -10°C and -15°C, the water outlet temperature gradually decreases from 60°C to 55°C.
- *** The sound pressure level is measured with distance 1.0m from the unit and height at 1.5m.
  (Test carry out for cooling at ambient 35°C DB and Water Out 7°C, heating at ambient 7°C DB / 6°C WB and water out 55°C)
- **** The sound power level is measured with accordance to EN12102 under conditions of the EN14825.

3.2 WH-SXC09K6E5 WH-UXZ09KE5

Item		Unit	Outdoor Unit		
Performance Test Condition			EN 14511 / EN14825		
Cooling Capacity		Condition (Ambient/Water)	A35W7		
		kW	8.80		
		BTU/h	30000		
		kcal/h	7570		
Cooling EER		W/W	3.11		
		kcal/hW	2.67		
Heating Capacity		Condition (Ambient/Water)	A7W35	A2W35	
		kW	9.00	9.00	
		BTU/h	30700	30700	
		kcal/h	7740	7740	
Heating COP		W/W	5.03	3.69	
		kcal/hW	4.32	3.17	
Heating ErP	Low Temperature Application (W35)		Warmer	Average	Colder
	Application	Climate			
	Pdesign	kW	9.0	9.0	11.0
	Tbivalent / TOL	°C	2 / 2	-10 / -10	-15 / -22
	SCOP / ns	(W/W) / %	6.47 / 256	4.96 / 195	4.31 / 169
	Annual Consumption	kWh	1859	3747	6289
	Class		A+++	A+++	A++
	Medium Temperature Application (W55)		Warmer	Average	Colder
	Application	Climate			
	Pdesign	kW	9.0	9.0	11.0
	Tbivalent / TOL	°C	2 / 2	-10 / -10	-15 / -22
	SCOP / ns	(W/W) / %	4.34 / 171	3.57 / 140	3.26 / 127
	Annual Consumption	kWh	2772	5208	8327
	Class		A+++	A++	A++
Noise Level		Condition (Ambient/Water)	A35W7	A7W35	A2W35
		dB (A)	Cooling: 49	Heating: 51	-
		Power Level dB	Cooling: 67	Heating: 68 / 65	-
Air Flow		m^3/min (ft^3/min)	Cooling: 85.3 (3010) Heating: 64.9 (2290)		
Refrigeration Control Device			Expansion Valve		
Refrigeration Oil		cm^3	FV50S (1300)		
Refrigerant (R32)		kg (oz)	1.60 (56.5) Precharge 2.20 (77.7) Maximum charge		
F-GAS	GWP		675		
	CO_2eq (ton) (Precharged / Maximum)		1.080 / 1.485		
Dimension	Height	mm (inch)	1340 (52-25/32)		
	Width	mm (inch)	900 (35-14/32)		
	Depth	mm (inch)	320 (11-24/32)		
Net Weight		kg (lbs)	88 (194)		
Pipe Diameter	Liquid	mm (inch)	6.35 (1/4)		
	Gas	mm (inch)	12.70 (1/2)		

Item		Unit	Outdoor Unit		
Standard Length		m (ft)	7 (23.0)		
Pipe Length Range		m (ft)	3 (9.8) ~ 30 (98.4)		
I/D & O/D Height Difference		m (ft)	20 (65.6)		
Additional Gas Amount		g/m (oz/ft)	30 (0.3)		
Refrigeration Charge Less		m (ft)	10 (32.8)		
Compressor	Type		Hermetic Motor		
	Motor Type		Brushless (6-poles)		
	Rated Output	kW	3.00		
Fan	Type		Propeller Fan		
	Material		PP		
	Motor Type		DC (8-poles)		
	Input Power	W	-		
	Output Power	W	60		
	Fan Speed	rpm	Cooling: 550 (Top), 590 (Bottom) Heating: 440 (Top), 480 (Bottom)		
Heat Exchanger	Fin material		Aluminium (Pre Coat)		
	Fin Type		Corrugated Fin		
	Row × Stage × FPI		2 × 62 × 19		
	Size (W × H × L)	mm	903.7 × 1302 × 36.38		
Power Source (Phase, Voltage, Cycle)		ø	Single		
		V	230		
		Hz	50		
Input Power		Condition (Ambient/Water)	A35W7	A7W35	A2W35
		kW	Cooling: 2.83	Heating: 1.79	Heating: 2.44
Maximum Input Power For Heatpump System		kW	6.40		
Power Supply 1 : Phase (Ø) / Max. Current (A) / Max. Input Power (W)			1Ø / 29.0 / 6.40k		
Power Supply 2 : Phase (Ø) / Max. Current (A) / Max. Input Power (W)			1Ø / 26.0 / 6.00k		
Power Supply 3 : Phase (Ø) / Max. Current (A) / Max. Input Power (W)			- / - / -		
Starting Current		A	8.5		
Running Current		Condition (Ambient/Water)	A35W7	A7W35	A2W35
		A	Cooling: 13.2	Heating: 8.5	Heating: 11.4
Maximum Current For Heatpump System		A	29.0		
Power Factor Power factor means total figure of compressor and outdoor fan motor.		%	Cooling: 93	Heating: 92	Heating: 93
Power Cord	Number of core		-		
	Length	m (ft)	-		
Thermostat			Electronic Control		
Protection Device			Electronic Control		

Item		Unit	Indoor Unit		
Performance Test Condition			EN 14511 / 14825		
Operation Range	Outdoor Ambient	°C	Cooling: 10 ~ 43 Heating: -28 ~ 35		
	Water Outlet	°C	Cooling: 5 ~ 20 Heating: 20 ~ 55 (Below Ambient -15°C) 20 ~ 60 (Below Ambient -10°C)		
Internal Pressure Differential		kPa	Cooling: 27.0 Heating: 28.0		
Noise Level		Condition (Ambient/Water)	A35W7	A7W35	A2W35
		dB (A)	Cooling: 33	Heating: 33	-
		Power Level dB	Cooling: 46	Heating: 46	-
Dimension	Height	mm (inch)	892 (35-1/8)		
	Width	mm (inch)	500 (19-11/16)		
	Depth	mm (inch)	348 (13-23/32)		
Net Weight		kg (lbs)	41 (90)		
Refrigerant Pipe Diameter	Liquid	mm (inch)	6.35 (1/4)		
	Gas	mm (inch)	12.70 (1/2)		
Water Pipe Diameter	Inlet	mm (inch)	(1-1/4)		
	Outlet	mm (inch)	(1-1/4)		
Water Drain Hose Inner Diameter		mm (inch)	12 (17/36)		
Pump	Motor Type		DC Motor		
	No. of Speed		7 (Software Selection)		
	Input Power	W	145		
Hot Water Coil	Type		Brazed Plate		
	No. of Plates		36		
	Size (W × H × L)	mm	68 × 333 × 121		
	Water Flow Rate	l/min (m^3/h)	Cooling: 25.2 (1.5) Heating: 25.8 (1.5)		
Pressure Relief Valve Water Circuit		kPa	Open: 300, Close: 210 and below		
Flow Switch			Electronic Sensor		
Protection Device		A	Residual Current Circuit Breaker (40)		
Expansion Vessel	Volume	l	10		
	MWP	bar	3		
Capacity of Integrated Electric Heater		kW	6.00		

Note:

- In case it is necessary to indicate the air flow volume in (l/s), the value in (m^3/min.) shall be multiplied by 16.7 and rounded down the decimal point.
- If the EUROVENT Certified models can be operated under the “extra-low” temperature condition, -7°C DB and -8°C WB temperature with rated voltage 230V shall be used.
- Capacity is measured at outdoor temperature 7°C DB and 6°C WB with controlled water inlet 30°C and water outlet 35°C (EN 14511-2)
- Flowrate indicated are based on nominal capacity adjustment of leaving water temperature (LWT) 35°C and ΔT=5°C.
- EER and COP classification is at 230V only in occordance with EU directive 2003/32/EC.
- ** Between outdoor ambient -10°C and -15°C, the water outlet temperature gradually decreases from 60°C to 55°C.
- *** The sound pressure level is measured with distance 1.0m from the unit and height at 1.5m.
  (Test carry out for cooling at ambient 35°C DB and Water Out 7°C, heating at ambient 7°C DB / 6°C WB and water out 55°C)
- **** The sound power level is measured with accordance to EN12102 under conditions of the EN14825.

3.3 WH-SXC12K6E5 WH-UXZ12KE5

Item		Unit	Outdoor Unit		
Performance Test Condition			EN 14511 / EN14825		
Cooling Capacity		Condition (Ambient/Water)	A35W7		
		kW	10.70		
		BTU/h	36500		
		kcal/h	9200		
Cooling EER		W/W	2.68		
		kcal/hW	2.30		
Heating Capacity		Condition (Ambient/Water)	A7W35	A2W35	
		kW	12.10	12.00	
		BTU/h	41300	41000	
		kcal/h	10410	10320	
Heating COP		W/W	4.84	3.44	
		kcal/hW	4.16	2.96	
Heating ErP	Low Temperature Application (W35)		Warmer	Average	Colder
	Application	Climate			
	Pdesign	kW	9.0	9.0	11.0
	Tbivalent / TOL	°C	2 / 2	-10 / -10	-15 / -22
	SCOP / ns	(W/W) / %	6.47 / 256	4.96 / 195	4.31 / 169
	Annual Consumption	kWh	1859	3747	6289
	Class		A+++	A+++	A++
	Medium Temperature Application (W55)		Warmer	Average	Colder
	Application	Climate			
	Pdesign	kW	9.0	9.0	11.0
	Tbivalent / TOL	°C	2 / 2	-10 / -10	-15 / -22
	SCOP / ns	(W/W) / %	4.34 / 171	3.57 / 140	3.26 / 127
	Annual Consumption	kWh	2772	5208	8327
	Class		A+++	A++	A++
Noise Level		Condition (Ambient/Water)	A35W7	A7W35	A2W35
		dB (A)	Cooling: 50	Heating: 52	-
		Power Level dB	Cooling: 68	Heating: 69 / 65	-
Air Flow		m^3/min (ft^3/min)	Cooling: 94.6 (3340) Heating: 76.0 (2680)		
Refrigeration Control Device			Expansion Valve		
Refrigeration Oil		cm^3	FV50S (1300)		
Refrigerant (R32)		kg (oz)	1.60 (56.5) Precharge 2.20 (77.7) Maximum charge		
F-GAS	GWP		675		
	CO_2eq (ton) (Precharged / Maximum)		1.080 / 1.485		
Dimension	Height	mm (inch)	1340 (52-25/32)		
	Width	mm (inch)	900 (35-14/32)		
	Depth	mm (inch)	320 (11-24/32)		
Net Weight		kg (lbs)	88 (194)		
Pipe Diameter	Liquid	mm (inch)	6.35 (1/4)		
	Gas	mm (inch)	12.70 (1/2)		

Item		Unit	Outdoor Unit		
Standard Length		m (ft)	7 (23.0)		
Pipe Length Range		m (ft)	3 (9.8) ~ 30 (98.4)		
I/D & O/D Height Difference		m (ft)	20 (65.6)		
Additional Gas Amount		g/m (oz/ft)	30 (0.3)		
Refrigeration Charge Less		m (ft)	10 (32.8)		
Compressor	Type		Hermetic Motor		
	Motor Type		Brushless (6-poles)		
	Rated Output	kW	3.00		
Fan	Type		Propeller Fan		
	Material		PP		
	Motor Type		DC (8-poles)		
	Input Power	W	-		
	Output Power	W	60		
	Fan Speed	rpm	Cooling: 600 (Top), 640 (Bottom) Heating: 500 (Top), 540 (Bottom)		
Heat Exchanger	Fin material		Aluminium (Pre Coat)		
	Fin Type		Corrugated Fin		
	Row × Stage × FPI		2 × 62 × 19		
	Size (W × H × L)	mm	903.7 × 1302 × 36.38		
Power Source (Phase, Voltage, Cycle)		ø	Single		
		V	230		
		Hz	50		
Input Power		Condition (Ambient/Water)	A35W7	A7W35	A2W35
		kW	Cooling: 4.00	Heating: 2.50	Heating: 3.49
Maximum Input Power For Heatpump System		kW	6.40		
Power Supply 1 : Phase (Ø) / Max. Current (A) / Max. Input Power (W)			1Ø / 29.0 / 6.40k		
Power Supply 2 : Phase (Ø) / Max. Current (A) / Max. Input Power (W)			1Ø / 26.0 / 6.00k		
Power Supply 3 : Phase (Ø) / Max. Current (A) / Max. Input Power (W)			- / - / -		
Starting Current		A	11.7		
Running Current		Condition (Ambient/Water)	A35W7	A7W35	A2W35
		A	Cooling: 18.3	Heating: 11.7	Heating: 16.2
Maximum Current For Heatpump System		A	29.0		
Power Factor Power factor means total figure of compressor and outdoor fan motor.		%	Cooling: 95	Heating: 93	Heating: 94
Power Cord	Number of core		-		
	Length	m (ft)	-		
Thermostat			Electronic Control		
Protection Device			Electronic Control		

Item		Unit	Indoor Unit		
Performance Test Condition			EN 14511 / EN14825		
Operation Range	Outdoor Ambient	°C	Cooling: 10 ~ 43 Heating: -28 ~ 35		
	Water Outlet	°C	Cooling: 5 ~ 20 Heating: 20 ~ 55 (Below Ambient -15°C) 20 ~ 60 (Below Ambient -10°C)		
Internal Pressure Differential		kPa	Cooling: 42.0 Heating: 52.0		
Noise Level		Condition (Ambient/Water)	A35W7	A7W35	A2W35
		dB (A)	Cooling: 33	Heating: 33	-
		Power Level dB	Cooling: 46	Heating: 46	-
Dimension	Height	mm (inch)	892 (35-1/8)		
	Width	mm (inch)	500 (19-11/16)		
	Depth	mm (inch)	348 (13-23/32)		
Net Weight		kg (lbs)	41 (90)		
Refrigerant Pipe Diameter	Liquid	mm (inch)	6.35 (1/4)		
	Gas	mm (inch)	12.70 (1/2)		
Water Pipe Diameter	Inlet	mm (inch)	(1-1/4)		
	Outlet	mm (inch)	(1-1/4)		
Water Drain Hose Inner Diameter		mm (inch)	12 (17/36)		
Pump	Motor Type		DC Motor		
	No. of Speed		7 (Software Selection)		
	Input Power	W	145		
Hot Water Coil	Type		Brazed Plate		
	No. of Plates		36		
	Size (W × H × L)	mm	68 × 333 × 121		
	Water Flow Rate	l/min (m^3/h)	Cooling: 30.7 (1.8) Heating: 34.4 (2.1)		
Pressure Relief Valve Water Circuit		kPa	Open: 300, Close: 210 and below		
Flow Switch			Electronic Sensor		
Protection Device		A	Residual Current Circuit Breaker (40)		
Expansion Vessel	Volume	l	10		
	MWP	bar	3		
Capacity of Integrated Electric Heater		kW	6.00		

Note:

- In case it is necessary to indicate the air flow volume in (l/s), the value in (m^3/min.) shall be multiplied by 16.7 and rounded down the decimal point.
- If the EUROVENT Certified models can be operated under the “extra-low” temperature condition, -7°C DB and -8°C WB temperature with rated voltage 230V shall be used.
- Capacity is measured at outdoor temperature 7°C DB and 6°C WB with controlled water inlet 30°C and water outlet 35°C (EN 14511-2)
- Flowrate indicated are based on nominal capacity adjustment of leaving water temperature (LWT) 35°C and ΔT=5°C.
- EER and COP classification is at 230V only in occordance with EU directive 2003/32/EC.
- ** Between outdoor ambient -10°C and -15°C, the water outlet temperature gradually decreases from 60°C to 55°C.
- *** The sound pressure level is measured with distance 1.0m from the unit and height at 1.5m.
  (Test carry out for cooling at ambient 35°C DB and Water Out 7°C, heating at ambient 7°C DB / 6°C WB and water out 55°C)
- **** The sound power level is measured with accordance to EN12102 under conditions of the EN14825.

4. Features

- **Inverter Technology**
  - Energy saving

- **High Efficiency**

- **Environment Protection**
  - Non-ozone depletion substances refrigerant (R32)

- **Long Installation Piping**
  - Long piping up to 30 meter with height difference 20 meter
  - Flexible 4-way piping for outdoor unit

- **Easy to use control panel**
  - Auto mode
  - Holiday mode
  - Dry concrete function
  - Weekly timer setting

- **A-class energy efficiency pump**
  - Water pump speed can be set by selection at control panel

- **Improved deice cycle**

- **Protection Feature**
  - Random auto restart after power failure for safety restart operation
  - Gas leakage protection
  - Prevent compressor reverse cycle
  - Inner protector to protect compressor

- **Serviceability Feature**
  - Breakdown Self Diagnosis function
  - System Status Check Buttons for servicing purpose
  - System Pumpdown Button for servicing purpose
  - Front maintenance design for outdoor unit

- **Operation Condition**

	HEATING (CIRCUIT)	*1, *2 COOLING (CIRCUIT)
Water outlet temperature (°C) (Min. / Max.)	20 / 55 (Below Ambient -15 °C) *3 20 / 60 (Above Ambient -10 °C) *3	5 / 20
Outdoor ambient temperature (°C) (Min. / Max.)	-28 / 35 (WH-UXZ series)	10 /43

5. Location of Controls and Components

5.1 Indoor Unit

5.1.1 Remote Controller buttons and display

The LCD display as shown in this manual are for instructional purpose only, and may differ from the actual unit.

Buttons / Indicator	
①	**Quick Menu button**
②	**Back button** Returns to the previous screen
③	**LCD Display** (Actual - Dark background with white icons)
④	**Main Menu button** For function setup
⑤	**ON/OFF button** Starts/Stops operation
⑥	**Operation indicator** Illuminates during operation, blinks during alarm.

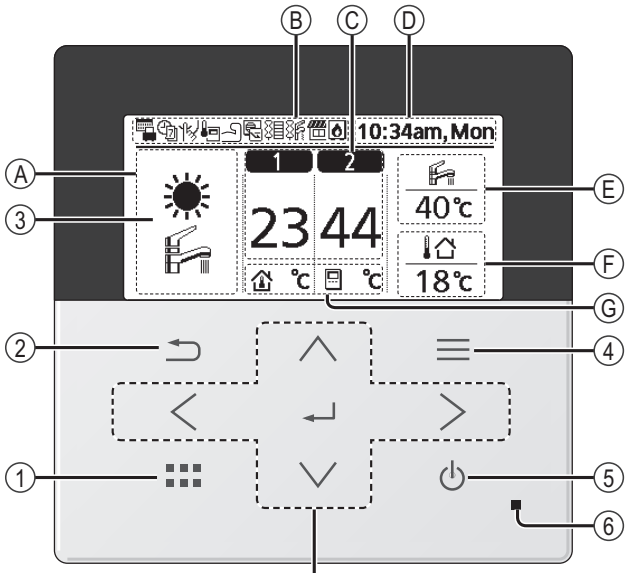

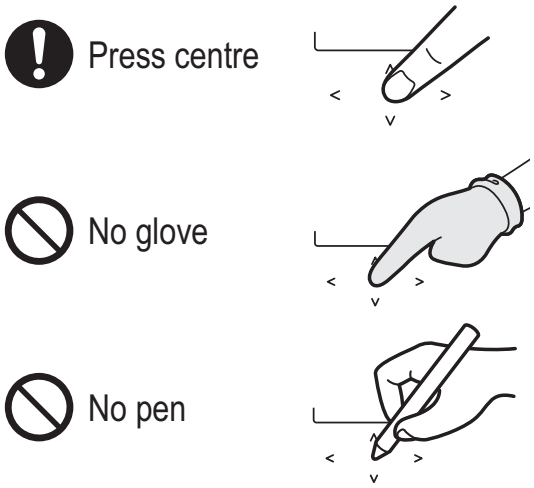

Cross key buttons
Selects an item.

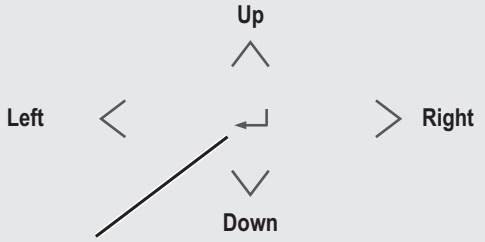

Enter button
Fixes the selected content.

Display

Ⓐ **Mode selection**

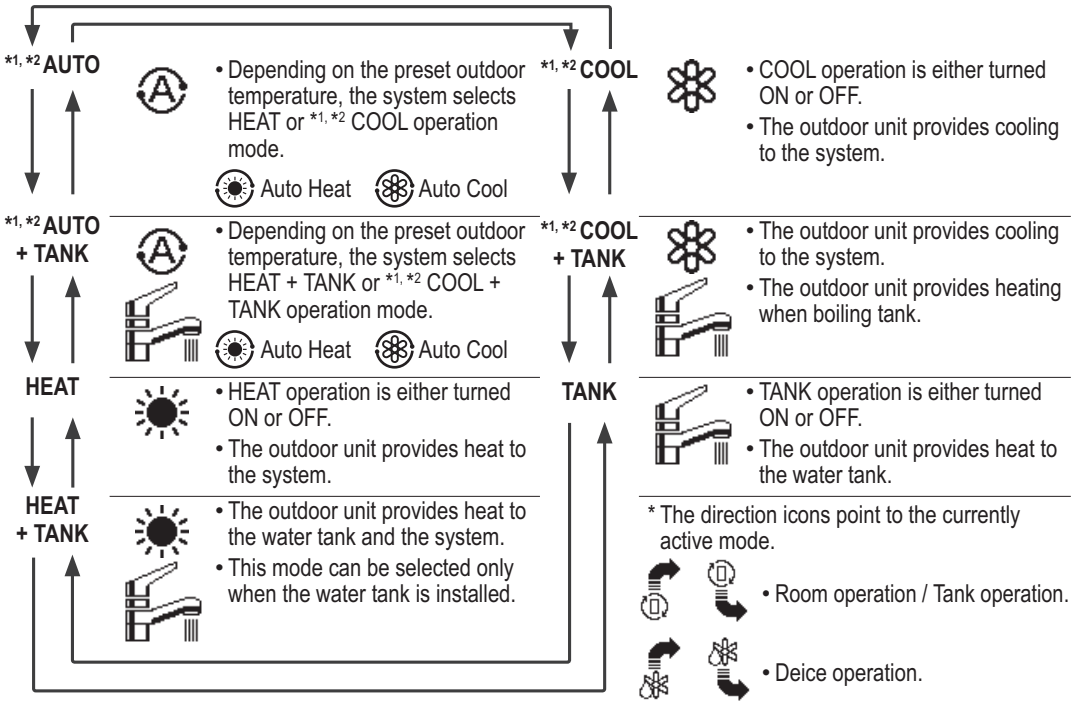

Ⓑ **Operation icons**

The status of operation is displayed.
Icon will not display (under operation OFF screen) whenever operation is OFF except weekly timer.

Holiday operation status	Weekly Timer operation status	Quiet operation status
Zone:Room Thermostat →Internal sensor status	Powerful operation status	Demand Control or SG ready or SHP status
Room Heater status	Tank Heater status	Solar status
Bivalent status (Boiler)		

Ⓒ **Temperature of each zone**

Ⓓ **Time and day**

Ⓔ **Water Tank temperature**

Ⓕ **Outdoor temperature**

Ⓖ **Sensor type/Set temperature type icons**

Water Temperature →Compensation curve	Water Temperature →Direct	Pool only
Room Thermostat →External	Room Thermostat →Internal	Room Thermistor

*1 The system is locked to operate without COOL mode. It can be unlocked only by authorised installers or our authorised service partners.
*2 Only displayed when COOL mode is unlocked (This means when COOL mode is available).

5.1.2 Initialization

Before starting to install the various menu settings, please initiate the Remote Controller by selecting the language of operation and installing the date and time correctly.
When power is turned on for the first time, it becomes the setting screen automatically. It can also be set from personal setting of the menu.

Selecting the language

Wait while the display is initializing.
When initializing screen ends, it turns to normal screen.
When any button is pressed, language setting screen appears.

① **Scroll with ∨ and ∧ to select the language.**

② **Press ↵ to confirm the selection.**

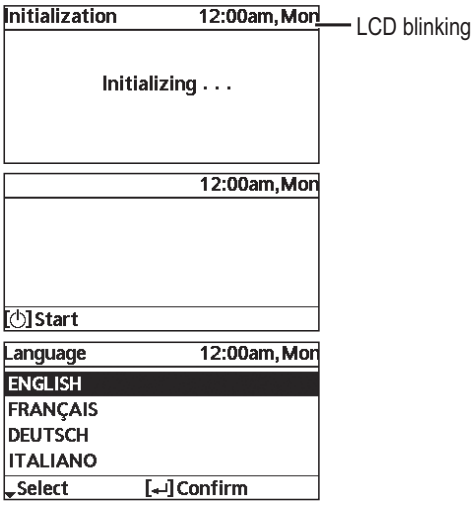

Setting the clock

① **Select with ∨ or ∧ how to display the time, either 24h or am/pm format (for example, 15:00 or 3:00 pm).**

② **Press ↵ to confirm the selection.**

③ **Use ∨ and ∧ to select year, month, day, hour and minutes. (Select and move with > and press ↵ to confirm.)**

④ **Once the time is set, time and day will appear on the display even if the Remote Controller is turned OFF.**

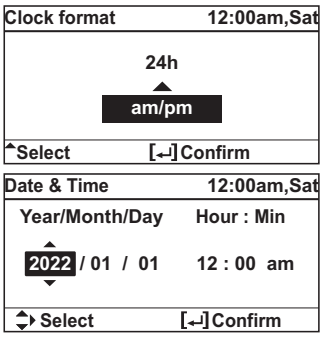

⑤ **Final precaution step to check and confirm whether outdoor front grille is fixed before operating the unit for safety purpose.**
Select Yes if outdoor front grille is already fixed. Then it will proceed to main screen.
Select No if outdoor front grille is not yet fixed. A caution message will pop up to remind on the installation.
***NOTE : Only applicable for indoor SDC models.**

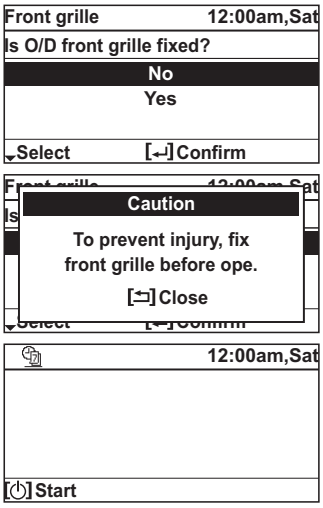

5.1.3 Quick Menu

After the initial settings have been completed, you can select a quick menu from the following options and edit the setting.

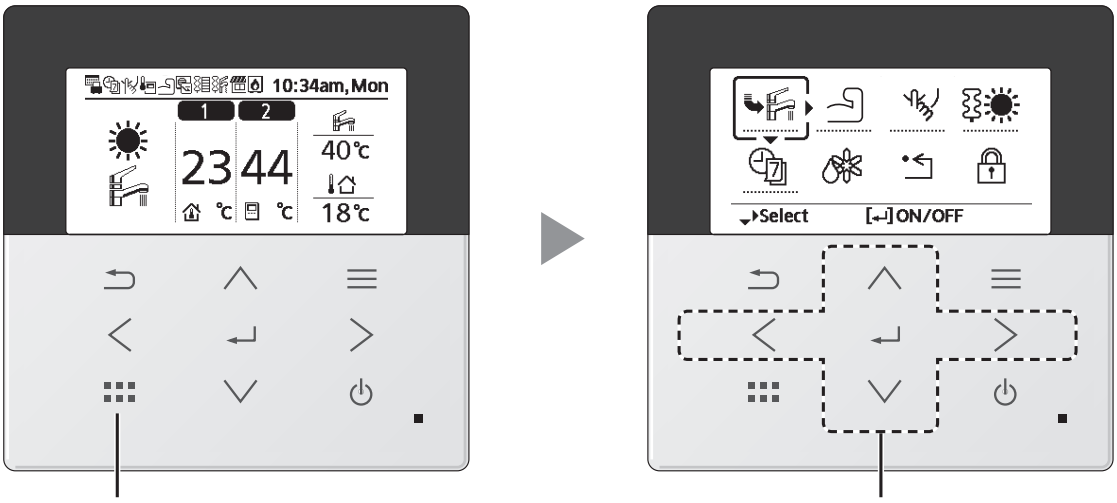

① Press ⠿ to display the quick menu.

② Use ∧ ∨ < > to select menu.

③ Press ↵ to turn on/off the select menu.

Quick Menu

Force DHW	Powerful	Quiet	Force Heater
Weekly Timer	Force Defrost	Error Reset	R/C Lock

Select [↵] ON/OFF

Select each setting and confirm the setting according to the instructions displayed at the bottom of the screen. (The icons refer to each selection key.)

To return to the Main Screen,

Press ⠿ or ↩ .

5.1.4 How to use the Quick Menu

Force DHW

Select this icon to turn the Tank DHW on or off.

Press ↵ to confirm your selection.

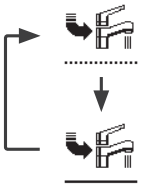

• Force DHW is turned off.

• Force DHW is turned on.

Note:

• Force DHW is disabled when Force Heater is turned on.

• When Force DHW is turned off, operation & mode should change back to the previous memorized status.

Powerful

Select this icon to operate the heating/cooling system powerfully.

Press ↵ to confirm your selection.

(The powerful operation starts approximately 1 minute after ↵ is pressed.)

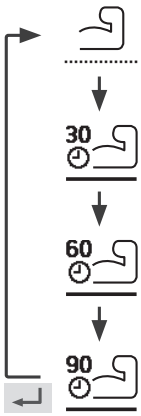

• Powerful mode is set off.

• The Powerful mode operates for 30 minutes.

• The Powerful mode operates for 60 minutes.

• The Powerful mode operates for 90 minutes.

Note:

• Powerful is disabled when operation is turned OFF.

Quiet

Select this icon to operate quietly.

Press ↵ to confirm your selection.

(The quiet operation starts approximately 1 minute after ↵ is pressed.)

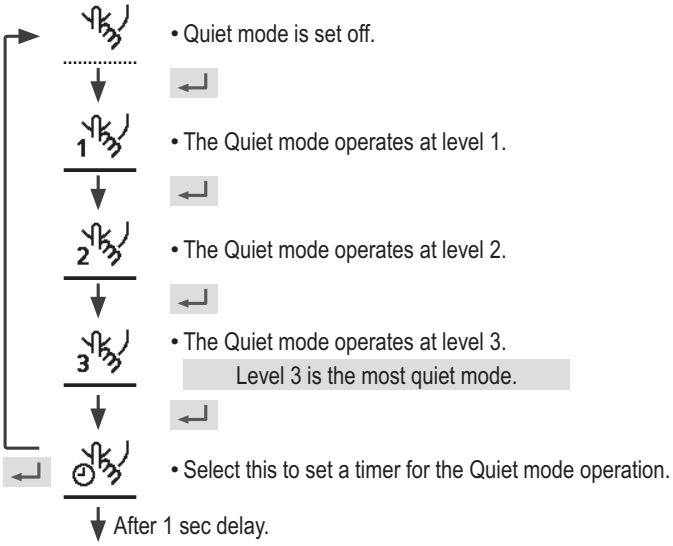

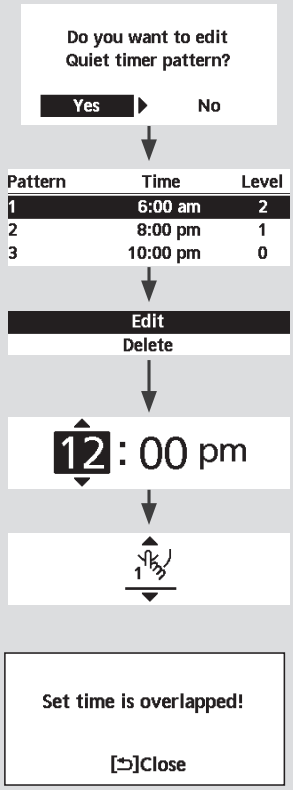

Select "Yes".

• Select "Yes" using < > buttons.

Select pattern "1" ~ "6".

Select "Edit".

• If you select "Delete", the timer setting of the selected pattern will be deleted.

Set the hour and minutes.

Select the level of Quiet.

Note:

• If the time overlaps with another pattern, "Set time is overlapped!" will appear on the screen.

Force Heater

Select to force the Heater on.

Press ↵ to confirm your selection.

(The Force Heater mode starts approximately 1 minute after ↵ is pressed.)

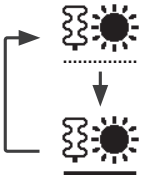

- Force Heater is turned off.
- Force Heater is turned on.

Note:

- Force Heater is disabled whenever operation is already on and “Disabled due to operation ON!” will be displayed.

Disabled due to operation ON!

[⮌]Close

Weekly Timer

Select this icon to delete (cancel) or change the pre-set Weekly Timer.

Press ↵ to confirm your selection.

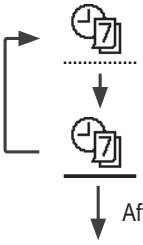

• Timer is not ON.

• Timer is set.

After 1 sec delay.

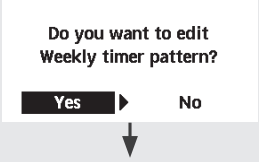

Select "Yes".

• If you select "No", the screen will return to the Main Screen.

• Timer setup: Select Timer setup to edit the Weekly Timer.

• Timer copy: Select to copy a timer setting.

[Example of a Timer setup]

Select the day(s) which you wish to edit using ∧ ∨ buttons.

If all 6 patterns are not preset, this screen will be displayed.

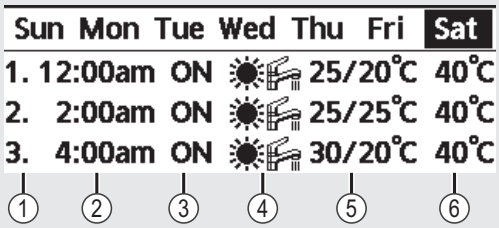

① **Select pattern "1" ~ "6".**

② **Set the hour and minutes of the Timer.**

③ **Select ON/OFF of the Timer.**

④ **Select the operation mode.**

Ⓐ / Ⓐ / ☀ / ☀ / / / ❄ /

• Select mode using ∧ ∨ buttons.

⑤ **Set the temperature for both Zone 1 and 2 (if your system has the 2-Zone setting).**

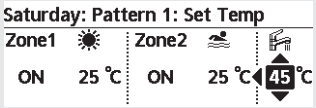

⑥ **Set the Tank temperature.**

Note:

• Timer is disabled when Force Heater is turned on or Heat-Cool SW is enabled.

• If you have preset the Weekly Timer on 2 zones, you must repeat the same procedure with Zone 2.

Force Defrost

Select to defrost the frozen pipes.

Press ↵ to confirm your selection.
(When the mode is accepted, below screen will be displayed.)

```
Request accepted!

[⮌]Close
```

Error Reset

Select to restore the previous settings when error has occurred.

Press ↵ to confirm your selection.
(When the mode has been accepted, below screen will be displayed.)

```
Request accepted!

[⮌]Close
```

- Make sure all units are turned off before selecting this mode which restores the whole system to the previous settings.

R/C Lock

Select to lock the Remote Controller.

Press ↵ to confirm your selection.
(When the mode has been accepted, below screen will be displayed.)

```
Do you want to
lock remote control?
Yes ▶ No
```

Select "Yes".
(The Main Screen will be locked.)
- If "No" is selected, the screen will return to the Main Screen.

To unlock the Remote Controller

Press any key.
(When the mode has been accepted, below screen will be displayed.)

```
0 * * *
```

Enter any 4 digits of number (if the number is correct, the screen will be unlocked).

To reset forgotten password (under operation OFF screen)

Press ⮌ , ↵ and > continuously for 5 seconds.
(When the mode has been accepted, below screen will be displayed.)

```
Reset password
Reset
```

Select "Reset".

```
1.Password is reset to 0000
2.Remote control is unlocked
```

(The screen will be off after 3 seconds.)

5.1.5 Menus (For user)

Select menus and determine settings according to the system available in the household. All initial settings must be done by an authorised dealer or a specialist. It is recommended that all alterations of the initial settings are also done by an authorised dealer or a specialist.

- After initial installation, you may manually adjust the settings.
- The initial setting remains active until the user changes it.
- The Remote Controller can be used for multiple installations.
- Ensure the operation indicator is OFF before setting.
- The system may not work properly if set wrongly.
  Please consult an authorised dealer.

To display <Main Menu>: ☰

To select menu: ∧ ∨ < >

To confirm the selected content: ↵

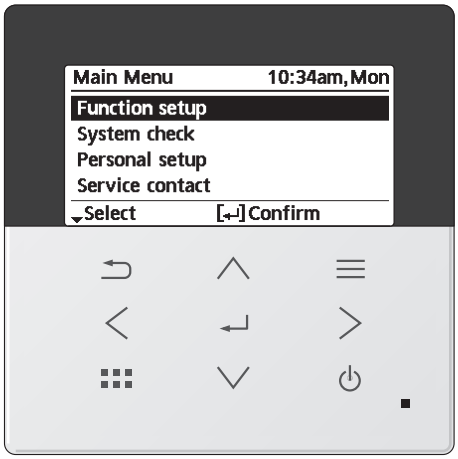

Menu	Default Setting	Setting Options / Display
1 Function setup		
1.1 > Weekly timer		
Once the weekly timer is set up, User can edit from Quick Menu. To set up to 6 patterns of operation on a daily basis. • Disabled if Heat-Cool SW is select "Yes" or if Force Heater is on.	**Timer setup** Select day of the week and set the patterns needed (Time / Operation ON/OFF / Mode)	Weekly timer 10:34am,Mon Sun Mon Tue Wed Thu Fri Sat 1. 8:00am ON 40℃ 2. 12:00pm ON 24/28℃ 40℃ 3. 1:00pm ON 12/10℃ Day Pattern Edit
	Timer copy Select day of the week	
1.2 > Holiday timer		
To save energy, a holiday period may be set to either turn OFF the system or lower the temperature during the period.	OFF	ON OFF
	> ON	
	Holiday start and end. Date and time	Holiday: End 10:34am,Mon Year/Month/Day Hour : Min 2022 / 01 / 01 10 : 00 am Select Confirm
	OFF or lowered temperature	
• Weekly timer setting may be temporarily disabled during Holiday timer setting but it will be restored once the Holiday timer is completed.		
1.3 > Quiet timer		
To operate quietly during the preset period. 6 patterns may be set. Level 0 means the mode is off.	Time to start Quiet : Date and time	Quiet 10:34am,Mon Pattern Time Level 1 8:00am 0 2 5:00pm 1 3 11:00pm 3 Select Edit
	Level of quietness: 0 ~ 3	

Menu	Default Setting	Setting Options / Display
1.4 > **Quiet priority**		
• To select priority during Quiet mode between Sound and Capacity. • If Sound priority is selected, unit will operate in quiet condition only. • If Capacity priority is selected, unit will operate in quiet condition but it will prioritize on providing required capacity at the same time.	Sound	Sound ▼ Capacity
1.5 > **Room heater**		
To set the room heater ON or OFF.	OFF	ON ▲ OFF
1.6 > **Tank heater**		
To set the tank heater ON or OFF.	OFF	ON ▲ OFF
1.7 > **Sterilization**		
To set the auto sterilization ON or OFF.	ON	ON ▼ OFF

• Do not use the system during sterilization in order to prevent scalding with hot water, or overheating of shower.
• Ask an authorised dealer to determine the level of sterilization function field settings according to the local laws and regulations.

Menu	Default Setting	Setting Options / Display
2 System check		
2.1 > Energy monitor		
Present or historical chart of energy consumption, generation or COP.	**Present** Select and retrieve **Historical chart** Select and retrieve	Total consumption (1year) 0.0 kWh 1year 1 2 3 4 5 6 7 8 9 10 11 12 Mth Jan, 2022: 0.0 kWh Approx. Month Mode
• COP= Coefficient of Performance. • For historical chart, the period is selected from 1 day/1 week/1year. • Energy consumption (kWh) of heating, *1, *2 cooling, tank and total may be retrieved. • The total power consumption is an estimated value based on AC 230 V and may differ from value measured by precise equipment.		
2.2 > System information		
Shows all system information in each area.	**Actual system information of 11 items: Inlet / Outlet / Zone 1 / Zone 2 / Tank / Buffer tank / Solar / Pool / COMP frequency / Pump flowrate / Water pressure** Select and retrieve	System information 10:34am,Mon 1. Inlet : 0℃ 2. Outlet : 0℃ 3. Zone 1 : 0℃ 4. Zone 2 : 0℃ Page
2.3 > Error history		
• Refer to Troubleshooting for error codes. • The most recent error code is displayed at the top.	Select and retrieve	Error history 10:34am,Mon 1. -- 2. -- 3. -- 4. -- Clear history
2.4 > Compressor		
Shows the compressor performance.	Select and retrieve	Compressor 10:34am,Mon 1. Current frequency : 0 Hz 2. (OFF-ON) counter : 0 3. Total ON time : 0 h Back
2.5 > Heater		
Total hours of ON time for Room heater/Tank heater.	Select and retrieve	Heater 10:34am,Mon Total ON time : 0h : 0h Back

*1 The system is locked to operate without COOL mode. It can be unlocked only by authorised installers or our authorised service partners.
*2 Only displayed when COOL mode is unlocked (This means when COOL mode is available).

Menu	Default Setting	Setting Options / Display
3 Personal setup		
3.1 > Remote control No.		
• To display remote control number of a particular remote controller so that installer and end user are well informed. • Main remote controller is displayed as RC-1. Second remote controller is displayed as RC-2.	Select and retrieve	RC No. 10:34am,Mon RC-1 [↵] Confirm
3.2 > Touch sound		
Turns the operation sound ON/ OFF.	ON	ON OFF
3.3 > LCD contrast		
Sets the screen contrast.	3	LCD contrast 10:34am,Mon Low High ◀▶Select [↵] Confirm
3.4 > Backlight		
Sets the duration of screen backlight.	1 min	Backlight 10:34am,Mon OFF 5 mins 15 secs 10 mins 1 min ▲Select [↵]Confirm
3.5 > Backlight intensity		
Sets screen backlight brightness.	4	Backlight intensity 10:34am,Mon Dark Bright ◀ Select [↵] Confirm
3.6 > Clock format		
Sets the type of clock display.	am/pm	Clock format 10:34am,Mon 24h am/pm ▲Select [↵] Confirm
3.7 > Date & Time		
Sets the present date and time.	Year / Month / Day / Hour / Min	Date & Time 10:34am,Mon Year/Month/Day Hour : Min 2022 / 01 / 01 10 : 00 am Select [↵] Confirm

Menu	Default Setting	Setting Options / Display
3.8 > Language		
Sets the display language for the top screen.	ENGLISH / FRANÇAIS / DEUTSCH / ITALIANO / ESPAÑOL / DANISH / SWEDISH / NORWEGIAN / POLISH / CZECH / NEDERLANDS / TÜRKÇE / SUOMI / MAGYAR / SLOVENŠČINA / HRVATSKI / LIETUVIŲ / PORTUGUÊS / БЪЛГАРСКИ / EESTI / LATVIEŠU / ROMÂNĂ / SHQIP / SLOVENČINA / МАКЕДОНСКИ / УКРАЇНСЬКА / ΕΛΛΗΝΙΚΑ	Language 10:34am, Mon ENGLISH FRANÇAIS DEUTSCH ITALIANO Select [↵] Confirm
3.9 > Unlock password		
4 digit password for all the settings.	0000	Unlock password 10:34am, Mon 0000 Select [↵] Confirm

4 Service contact		
4.1 > Contact 1 / Contact 2		
Preset contact number for installer.	Select and retrieve	Service setup 10:34am, Mon Contact 1 Name : Bryan Adams : 08812345678 Select

5.1.6 Menus (For installer)

Menu	Default Setting	Setting Options / Display
5 Installer setup > System setup		
5.1 > Optional PCB connectivity		
To connect to the external PCB required for servicing.	No	Yes No

• If the external PCB is connected (optional), the system will have following additional functions:

① Control over 2 zones (including the swimming pool and the function to heat water in it).
② Solar function (the solar thermal panels connected to either the DHW (Domestic Hot Water) Tank or the Buffer Tank.
  • DHW is not applicable for WH-ADC models.
③ External compressor switch.
④ External error signal.
⑤ SG ready control.
⑥ Demand control.
⑦ Heat-Cool SW

5.2 > Zone & Sensor		
To select the sensors and to select either 1 zone or 2 zone system.	**Zone** • After selecting 1 or 2 zone system, proceed to the selection of room or swimming pool. • If the swimming pool is selected, the temperature must be selected for △T temperature between 0°C ~ 10 °C.	Zone & Sensor 10:34am,Mon Zone 1 Zone system 2 Zones system Select [↵] Confirm
	Sensor For room thermostat, there is a further selection of external or internal. • If select internal, there is a further selection of RC-1 or RC-2 (only available when Zone selection is 1 zone system). Select RC-1 if main remote controller's thermistor is to be used for room temperature control and vice versa.	Zone & Sensor 10:34am,Mon Sensor Water temperature Room thermostat Room thermistor Select [↵] Confirm
5.3 > Heater capacity		
To reduce the heater power if unnecessary.* 3 kW / 6 kW / 9 kW * Options of kW vary depending on the model.		Heater capacity 10:34am,Mon 3 kW [↵] Confirm
5.4 > Anti freezing		
To activate or deactivate the water freeze prevention when the system is OFF	Yes	Yes No

Menu	Default Setting	Setting Options / Display
5.5 > DHW capacity		
To select tank heating capacity to variable or standard. Variable capacity heat up tank with fast mode and keep the tank temperature with efficient mode. While standard capacity heat up tank with rated heating capacity.	Variable	Variable Standard
5.6 > Buffer tank connection		
To connect tank to the system and if selected YES, to set △T temperature.	No	Yes No
	> Yes	
	5 °C	Set △T for Buffer Tank Buffer tank 10:34am,Mon ΔT for Buffer tank Range: (0℃~10℃) Steps: ±1℃ 5 ℃ Select [↵] Confirm
5.7 > Base pan heater		
To select whether or not optional base pan heater is connected. * Type A - The base pan heater activates only during deice operation. * Type B - The base pan heater activates when outdoor ambient temperature is 5 °C or lower.	No	Yes No
	> Yes	
	A	Set base pan heater type*. Base pan heater type 10:34am,Mon A B Select [↵] Confirm
5.8 > Alternative outdoor sensor		
To select an alternative outdoor sensor.	No	Yes No
5.9 > Bivalent connection		
To select to enable or disable bivalent connection.	No	Yes No
> Yes		
To select either auto control pattern or SG ready input control pattern or smart control pattern. - This selection only display to select when optional pcb connection set to Yes.	Auto	Auto SG ready Smart

Menu	Default Setting	Setting Options / Display	
To select a bivalent connection to allow an additional heat source such as a boiler to heat-up the buffer tank and domestic hot water tank when heatpump capacity is insufficient at low outdoor temperature. The bivalent feature can be set-up either in alternative mode (heatpump and boiler operate alternately), or in parallel mode (both heatpump and boiler operate simultaneously), or in advance parallel mode (heatpump operates and boiler turns on for buffer-tank and/or domestic hot water depending on the control pattern setting options).	> Yes > Auto		
	-5 °C	Set outdoor temperature for turn ON Bivalent connection.	Bivalent connection 10:34am,Mon Turn ON: Outdoor temp Range: (-15℃~35℃) Steps: ±1℃ -5 ℃ Select [↵] Confirm
	Yes > After selecting the outdoor temperature		
	Control pattern Alternative / Parallel / Advanced parallel • Select advanced parallel for bivalent use of the tanks.		Bivalent connection 10:34am,Mon Control pattern Alternative Parallel Advanced parallel Select [↵] Confirm
	Control pattern > Alternative		
	OFF	Option to set external pump either ON or OFF during bivalent operation. Set to ON if system is simple bivalent connection.	Bivalent connection 10:34am,Mon External pump ON OFF Select [↵] Confirm
	Control pattern > Advanced parallel		
	Heat • "Heat" implies Buffer Tank and "DHW" implies Domestic Hot Water Tank.	Selection of the tank	Bivalent connection 10:34am,Mon Advanced parallel Heat DHW Select [↵] Confirm
	Control pattern > Advanced parallel > Heat > Yes		
	• Buffer Tank is activated only after selecting "Yes".		Bivalent connection 10:34am,Mon Advanced parallel: Heat Yes No Select [↵] Confirm
	-8 °C	Set the temperature threshold to start the bivalent heat source.	Bivalent connection 10:34am,Mon Heat start: Target temp. Range: (-10℃~0℃) Steps: ±1℃ -8 ℃ Select [↵] Confirm
	0:30	Delay timer to start the bivalent heat source (in hour and minutes).	Bivalent connection 10:34am,Mon Heat start: Delay time Range: (0:00~1:30) Steps: ±0:05 0:30 Select [↵] Confirm
	-2 °C	Set the temperature threshold to stop the bivalent heat source.	Bivalent connection 10:34am,Mon Heat stop: Target temp. Range: (-10℃~0℃) Steps: ±1℃ -2 ℃ Select [↵] Confirm

Menu	Default Setting	Setting Options / Display	
	0:30	Delay timer to stop the bivalent heat source (in hour and minutes).	Bivalent connection 10:34am,Mon Heat stop: Delay time Range: (0:00~1:30) Steps: ±0:05 0:30 Select [↵] Confirm
	Control pattern > Advanced parallel > DHW > Yes		
	• DHW Tank is activated only after selecting "Yes".		Bivalent connection 10:34am,Mon Advanced parallel: DHW Yes No Select [↵] Confirm
	0:30	Delay timer to start the bivalent heat source (in hour and minutes).	Bivalent connection 10:34am,Mon DHW: Delay time Range: (0:30~1:30) Steps: ±0:05 0:30 Select [↵] Confirm
SG ready input control for bivalent system follow below input condition.	**> Yes > SG ready**		
	OFF	Option to set external pump either ON or OFF during bivalent operation. Set to ON if system is simple bivalent connection.	Bivalent connection 10:34am,Mon External pump ON OFF Select [↵] Confirm
To do settings related to electricity and boiler so that unit is able to determine whether to operate heat pump or boiler at a particular period depends on operating cost of both heat sources. These settings are electricity price, boiler price, season, schedule etc.	**> Yes > Smart**		
	OFF	Option to set external pump either ON or OFF during bivalent operation. Set to ON if system is simple bivalent connection.	Bivalent connection 10:34am,Mon External pump ON OFF Select [↵] Confirm
	> Yes > Smart > After selecting for the external pump > Energy price		
	- Select **Electricity** to set on electricity price. - Select **Boiler** to set on boiler price and its efficiency.		Bivalent connection 10:34am,Mon Energy price Electricity Boiler Select [↵] Confirm

SG signal		Operation pattern
Vcc-bit1	Vcc-bit2	
Open	Open	Heat Pump OFF, Boiler OFF
Short	Open	Heat Pump ON, Boiler OFF
Open	Short	Heat Pump OFF, Boiler ON
Short	Short	Heat Pump ON, Boiler ON

Menu	Default Setting	Setting Options / Display
	> Yes > Smart > After selecting for the external pump > Energy price > Electricity	
	0.0 * / kWh - There are total 10 different prices can be set for Electricity: Electricity price 1 ~ Electricity price 10 - Range is 0 ~ 999.9 * / kWh - Press ∧ or ∨ to enter a setting screen as shown in Figure 1. Then start setting the value of electricity price. - After finish setting a particular electricity price (eg. Electricity price 1), press < or > to go and set for other electricity price. * Set the price according to value provided by electrical supply company.	Bivalent connection 10:34am,Mon Electricity price 1 Range: (0~999.9 ∗/kWh) Steps: ±0.1∗/kWh 0.0 Select Figure 1 0 0 0.0 Select [↵] Confirm
	> Yes > Smart > After selecting for the external pump > Energy price > Boiler	
	0.0 * / kWh - Refer to method of Electricity price setting above for setting of boiler price. - After finish setting of boiler price, set the boiler efficiency (Range : 0 ~ 99%).	Bivalent connection 10:34am,Mon Boiler price Range: (0~999.9 ∗/kWh) Steps: ±0.1∗/kWh 0.0 Select [↵] Confirm
	0% * Set the price according to value provided by boiler or gas supply company.	Bivalent connection 10:34am,Mon Boiler efficiency Range: (0~99%) Steps: ±1% 0 Select [↵] Confirm

Remark : * implies cents in most currency except Czech crown.

Menu	Default Setting	Setting Options / Display
	> Yes > Smart > After selecting for the external pump > Schedule > Season setting	
	Season 1 : Dec (Refers to Winter season) Season 2 : Mar (Refers to Spring season) Season 3 : Jun (Refers to Summer season) Season 4 : Oct (Refers to Autumn season) - There are total 4 seasons to be set - Set the starting month for each season. (Eg. when Season 1 is set to Dec and Season 2 is set to Mar, month of December to February will be treated as Season 1).	Bivalent connection 10:34am,Mon Schedule Season setting Schedule setting Select [↵] Confirm Bivalent connection 10:34am,Mon Season 1: Start month Range: (Jan~Dec) Steps: ±1month Dec Select [↵] Confirm
	> Yes > Smart > After selecting for the external pump > Schedule > Schedule setting	
	Start time (Pattern 1) : 3:00am Start time (Pattern 2) : 9:00am Start time (Pattern 3) : 4:00pm Start time (Pattern 4) : 9:00pm - For each season, there are total 4 patterns can be set.	Bivalent connection 10:34am,Mon Schedule setting Season 1 Season 2 Season 3 Select [↵] Confirm
	Price (Pattern 1/2/3/4) : 1 - Set the target start time and the appropriate electricity price for each pattern.	Season 1 10:34am,Mon Start time Price(∗/kWh) 1. 3:00am 0.0 2. 9:00am 0.0 3. 4:00pm 0.0 Select [↵] Edit
	- Select “1” to edit both start time and electricity price. Select “2” to edit electricity price only.	Select 1: To edit time & price 2: To edit price only 1 2

Menu	Default Setting	Setting Options / Display	
	- Range of start time displayed can be in “24h” or “am/pm” format depend on setting of “Clock format”.		Season 1 10:34am,Mon Pattern 1: Start time Range: (0.00~23.00) Steps: ±1hour 3.00 Select [↵] Confirm
	- Range of electricity price is 0 ~ 10 which refers back to the 10 different electricity price set previously (under “Energy price > Electricity”: Electricity price 1 ~ Electricity price 10). The price displayed on the upper right corner indicates the previous set value of Electricity price 1 to Electricity price 10. * When the price is set to “0”, the electricity price will be treated as 0.0 * / kWh. It is for the convenience of installer when 0.0 is the desired setting value for a particular time.		Season 1 10:34am,Mon Pattern 1: Price 0.0 ∗/kWh Range: (0~10) Steps: ±1 0 Select [↵] Confirm
5.10	**> External SW**		
	No		Yes No
5.11	**> Solar connection**		
• The optional PCB connectivity must be selected YES to enable the function. • If the optional PCB connectivity is not selected, the function will not appear on the display. • DHW is not applicable for WH-ADC models.	No		Yes No
	> Yes		
	Buffer tank	Selection of the tank	Solar connection 10:34am,Mon Buffer tank DHW tank Select [↵] Confirm
	> Yes > After selecting the tank		
	10 °C	Set △T ON temperature	Solar connection 10:34am,Mon ΔT Turn ON Range: (6℃~15℃) Steps: ±1℃ 10 ℃ Select [↵] Confirm

Menu	Default Setting	Setting Options / Display	
	> Yes > After selecting the tank > △T ON temperature		
	5 °C	Set △T OFF temperature	Solar connection 10:34am, Mon ΔT Turn OFF Range: (2℃~9℃) Steps: ±1℃ 5 ℃ Select [↵] Confirm
	> Yes > After selecting the tank > △T ON temperature > △T OFF temperature		
	5 °C	Set Antifreeze temperature	Solar connection 10:34am, Mon Anti freeze Range: (-20℃~10℃) Steps: ±1℃ 5 ℃ Select [↵] Confirm
	> Yes > After selecting the tank > △T ON temperature > △T OFF temperature > After setting the antifreeze temperature		
	80 °C	Set Hi limit	Solar connection 10:34am, Mon Hi limit Range: (70℃~90℃) Steps: ±5℃ 80 ℃ Select [↵] Confirm
5.12 > External error signal			
	No		Yes No
5.13 > Demand control			
	No		Yes No
5.14 > SG ready			
	No		Yes No
	> Yes		
	120 %	Capacity (1) & (2) of DHW (in %), Heat (in %) and Cool (in °C)	SG ready 10:34am, Mon Capacity [1-0]: DHW Range: (50%~150%) Steps: ±5% 120 % Select [↵] Confirm
5.15 > External compressor SW			
	No		Yes No
5.16 > Circulation liquid			
To select whether to circulate water or glycol in the system.	Water		Circulation liquid 10:34am, Mon Water Glycol Select [↵] Confirm

Menu	Default Setting	Setting Options / Display
5.17 > Heat-Cool SW		
	No	Yes ▲ No
5.18 > Force heater		
To turn on Force heater either manually (by default) or automatically.	Manual	Force heater 10:34am,Mon Auto ▲ Manual ▲Select [↵] Confirm
5.19 > Force defrost		
If auto selection is set, outdoor unit will start defrost operation if long heating hour operate during low outdoor temperature.	Manual	Auto ▲ Manual
5.20 > Defrost signal		
To turn on defrost signal to stop fan coil during defrost operation. (If defrost signal set to yes, bivalent function will not available to use)	No	Yes ▲ No
5.21 > Pump flowrate		
To set variable flow pump control or fix pump duty control.	△T	ΔT ▼ Max. Duty
5.22 > DHW Defrost		
Allow system to run defrost by using hot water instead of room unit for better room comfort.	Yes	Yes ▼ No
5.23 > Heating control		
To select unit operation condition whether to achieve set temperature faster or to save energy.	Comfort	Comfort ▼ Efficiency

Menu	Default Setting	Setting Options / Display
5.24 > External meter		
To set which external meter to be used depends on meter connection. There are generation meters and various types of electricity meters. For generation meters, there are two connection systems :- a) One generation meter system : Heat-cool meter only b) Two generation meter system : Heat-cool meter and Tank meter	Heat-cool meter : No * Tank meter : No Elec. meter HP : No Elec. meter 1 (PV) : No Elec. meter 2 (Building) : No Elec. meter 3 (Reserve) : No * Only available when Heat-cool meter select Yes	External meter 10:34am,Mon Heat-Cool meter Tank meter Elec. meter HP Elec. meter 1 (PV) Select [↵] Confirm External meter 10:34am,Mon Elec. meter HP Elec. meter 1 (PV) Elec. meter 2 (Building) Elec. meter 3 (Reserve) Select [↵] Confirm
	> Heat-cool meter	
	- Set Heat-cool meter to Yes when this generation meter is connected. - It is to measure energy generation of heat pump unit during heating, cooling and DHW operation (one generation meter system) or during heating and cooling only (two generation meter system).	Yes No
	> Tank meter	
	- Set Tank meter to Yes when this generation meter is connected. - It is to measure energy generation of heat pump unit during DHW operation*. * Only available to select when Heat-cool meter is set to Yes. Only set Tank meter to Yes when the connection is two generation meter system.	Yes No
	> Elec. meter HP	
	- Set Elec. meter HP to Yes when this electricity meter is connected. - It is to measure energy consumption of heat pump unit.	Yes No
	> Elec. meter 1 (PV)	
	- Set Elec. meter 1 (PV) to Yes when this electricity meter is connected. - It is to measure energy generation of solar system. This data will be displayed only on Cloud system.	Yes No
	> Elec. meter 2 (Building)	
	- Set Elec. meter 2 (Building) to Yes when this electricity meter is connected. - It is to measure energy consumption of the building. This data will be displayed only on Cloud system.	Yes No

Menu	Default Setting	Setting Options / Display
	> Elec. meter 3 (Reserve)	
	- Set Elec. meter 3 (Reserve) to Yes when this electricity meter is connected. - It is to measure energy consumption. This data will be displayed only on Cloud system.	Yes No

(NOTE) : If [Approx.] is shown on Energy Monitor display, data displayed on the remote controller is obtained through heat pump's internal calculation.
If [Approx.] is NOT shown on Energy Monitor display, data** displayed on the remote controller is obtained by External Meters.
Data stored on the Aquarea unit can be mixed between internal calculation and External Meters.
**In order to know the exact consumption or generation, please use as reference always the External Meters' data.

Remark : Elec. stands for "Electricity"
HP stands for "Heat pump"

Menu	Default Setting	Setting Options / Display

6 Installer setup > Operation setup

To access to the four major functions or modes.	4 main modes Heat / *1, *2 Cool / *1, *2 Auto / Tank	Operation setup 10:34am,Mon Heat Cool Auto Tank Select [↵] Confirm

6.1 > Heat

To set various water & ambient temperatures for heating.	Water temp. for heating ON / Outdoor temp. for heating OFF / △T for heating ON / Heater ON/OFF	Operation setup 10:34am,Mon Heat Water temp. for heating ON Outdoor temp. for heating OFF ΔT for heating ON Select [↵] Confirm

> Water temp. for heating ON

Compensation curve	Heating ON temperatures in compensation curve or direct input.	Operation setup 10:34am,Mon Heat ON: Water temp. Compensation curve Direct Select [↵] Confirm

> Water temp. for heating ON > Compensation curve

X axis: -5 °C, 15 °C Y axis: 55 °C, 35 °C	Input the 4 temperature points (2 on horizontal X axis, 2 on vertical Y axis).	Heat ON: Water temp.:Zone1 55℃ 60 35℃ 20 -20 -5℃ 15℃ 15 Select [↵] Confirm

- Temperature range: X axis: -20 °C ~ 15 °C, Y axis: See below
- Temperature range for the Y axis input:
  1. WH-UD model: 20 °C ~ 60 °C
  2. WH-UH model & Back up heater is enabled: 25 °C ~ 65 °C
  3. WH-UH model & Back up heater is disabled: 35 °C ~ 65 °C
  4. WH-UX model: 20 °C ~ 60 °C
- If 2 zone system is selected, the 4 temperature points must also be input for Zone 2.
- “Zone 1” and “Zone 2” will not appear on the display if only 1 zone system.

> Water temp. for heating ON > Direct

35 °C	Temperature for heating ON	Operation setup 10:34am,Mon Heat ON: Water temp.:Zone2 Range: (20℃~60℃) Steps: ±1℃ 35 ℃ Select [↵] Confirm

- Min. ~ Max. range is conditional as follows:
  1. WH-UD model: 20 °C ~ 60 °C
  2. WH-UH model & Back up heater is enabled: 25 °C ~ 65 °C
  3. WH-UH model & Back up heater is disabled: 35 °C ~ 65 °C
  4. WH-UX model: 20 °C ~ 60 °C
- If 2 zone system is selected, temperature set point must input for Zone 2.
- “Zone 1” and “Zone 2” will not appear on the display if only 1 zone system.

*1 The system is locked to operate without COOL mode. It can be unlocked only by authorised installers or our authorised service partners.
*2 Only displayed when COOL mode is unlocked (This means when COOL mode is available).

Menu	Default Setting	Setting Options / Display	
	> Outdoor temp. for heating OFF		
	24 °C	Temperature for heating OFF	Operation setup 10:34am,Mon Heat OFF: Outdoor temp. Range: (5℃~35℃) Steps: ±1℃ 24 ℃ Select [↵] Confirm
	> △T for heating ON		
	5 °C	Set △T for heating ON. * This setting will not available to set when pump flowrate set to Max. duty.	Operation setup 10:34am,Mon Heat ON: ΔT Range: (1℃~15℃) Steps: ±1℃ 5 ℃ Select [↵] Confirm
	> Heater ON/OFF		
	> Heater ON/OFF > Outdoor temp. for heater ON		
	0 °C	Temperature for heater ON	Operation setup 10:34am,Mon Heater ON: Outdoor temp. Range: (-20℃~15℃) Steps: ±1℃ 0 ℃ Select [↵] Confirm
	> Heater ON/OFF > Delay time for heater ON		
	0:30 min	Delay time for heater to turn on	Operation setup 10:34am,Mon Heater ON: Delay time Range: (0:10~1:00) Steps: ±0:10 0:30 Select [↵] Confirm
	> Heater ON/OFF > Water temperature for heater ON		
	-4 °C	Setting of water temperature to turn on from water set temperature.	Operation setup 10:34am,Mon Heater ON: ΔT of target Temp. Range: (-10℃~-2℃) Steps: ±1℃ -4 ℃ Select [↵] Confirm
	> Heater ON/OFF > Water temperature for heater OFF		
	-2 °C	Setting of water temperature to turn off from water set temperature.	Operation setup 10:34am,Mon Heater OFF: ΔT of target Temp. Range: (-8℃~0℃) Steps: ±1℃ -2 ℃ Select [↵] Confirm
6.2 > *1, *2 Cool			
To set various water & ambient temperatures for cooling.	Water temperatures for cooling ON and △T for cooling ON.		Operation setup 10:34am,Mon Cool Water temp. for cooling ON ΔT for cooling ON Select [↵] Confirm

*1 The system is locked to operate without COOL mode. It can be unlocked only by authorised installers or our authorised service partners.
*2 Only displayed when COOL mode is unlocked (This means when COOL mode is available).

Menu	Default Setting	Setting Options / Display	
	> Water temp. for cooling ON		
	Compensation curve	Cooling ON temperatures in compensation curve or direct input.	Operation setup 10:34am,Mon Cool ON: Water temp. Compensation curve Direct Select [↵] Confirm
	> Water temp. for cooling ON > Compensation curve		
	X axis: 20 °C, 30 °C Y axis: 15 °C, 10 °C	Input the 4 temperature points (2 on horizontal X axis, 2 on vertical Y axis)	Cool ON: Water temp: Zone1 15℃ 10℃ 20 5 15 20℃ 30℃ 30 Select [↵] Confirm
	• If 2 zone system is selected, the 4 temperature points must also be input for Zone 2. • "Zone 1" and "Zone 2" will not appear on the display if only 1 zone system.		
	> Water temp. for cooling ON > Direct		
	10 °C	Set temperature for Cooling ON	Operation setup 10:34am,Mon Cool ON: Water temp.: Zone2 Range: (5℃~20℃) Steps: ±1℃ 10 ℃ Select [↵] Confirm
	• If 2 zone system is selected, temperature set point must input for Zone 2. • "Zone 1" and "Zone 2" will not appear on the display if only 1 zone system.		
	> △T for cooling ON		
	5 °C	Set △T for cooling ON * This setting will not available to set when pump flowrate set to Max. duty.	Operation setup 10:34am,Mon Cool ON: ΔT Range: (1℃~15℃) Steps: ±1℃ 5 ℃ Select [↵] Confirm
6.3	**> *1, *2 Auto**		
Automatic switch from Heat to Cool or Cool to Heat.	Outdoor temperatures for switching from Heat to Cool or Cool to Heat. Outdoor temp. for (Heat to Cool) / Outdoor temp. for (Cool to Heat)		Operation setup 10:34am,Mon Auto Outdoor temp. for (Heat to Cool) Outdoor temp. for (Cool to Heat) Select [↵] Confirm
	> Outdoor temp. for (Heat to Cool)		
	15 °C	Set outdoor temperature for switching from Heat to Cool.	Operation setup 10:34am,Mon Auto: Outdoor temp.(Heat to Cool) Range: (11℃~25℃) Steps: ±1℃ 15 ℃ Select [↵] Confirm

*1 The system is locked to operate without COOL mode. It can be unlocked only by authorised installers or our authorised service partners.
*2 Only displayed when COOL mode is unlocked (This means when COOL mode is available).

Menu	Default Setting	Setting Options / Display	
	> Outdoor temp. for (Cool to Heat)		
	10 °C	Set outdoor temperature for switching from Cool to Heat.	Operation setup 10:34am,Mon Auto: Outdoor temp.(Cool to Heat) Range: (5℃~14℃) Steps: ±1℃ 10 ℃ Select [↵] Confirm
6.4 > Tank Setting functions for the tank.			
	Floor operation time (max) / Tank heat up time (max) / Tank re-heat temp. / Sterilization		Operation setup 10:34am,Mon Tank Floor operation time (max) Tank heat up time (max) Tank re-heat temp. Select [↵] Confirm
	• The display will show 3 functions at a time.		
	> Floor operation time (max)		
	8:00	Maximum time for floor operation (in hours and minutes)	Operation setup 10:34am,Mon Tank: Floor ope. time (max) Range: (0:30~10:00) Steps: ±0:30 8:00 Select [↵] Confirm
	> Tank heat up time (max)		
	1:00	Maximum time for heating the tank (in hours and minutes)	Operation setup 10:34am,Mon Tank: Heat up time (max) Range: (0:05~4:00) Steps: ±0:05 1:00 Select [↵] Confirm
	> Tank re-heat temp.		
	-8 °C	Set temperature to perform reboil of tank water.	Operation setup 10:34am,Mon Tank: Re-heat temp. Range: (-12℃~-2℃) Steps: ±1℃ -8 ℃ Select [↵] Confirm
	> Sterilization		
	Monday	Sterilization may be set for 1 or more days of the week. Sun / Mon / Tue / Wed / Thu / Fri / Sat	Operation setup 10:34am,Mon Sterilization: Day Sun Mon Tue Wed Thu Fri Sat — ✓ — — — — — Day ☑/⊟ [↵] Confirm
	> Sterilization: Time		
	12:00	Time of the selected day(s) of the week to sterilize the tank 0:00 ~ 23:59	Operation setup 10:34am,Mon Sterilization: Time 12 : 00 pm Select [↵] Confirm

Menu	Default Setting	Setting Options / Display	
	> Sterilization: Boiling temp.		
	65 °C	Set boiling temperatures for sterilize the tank.	Operation setup 10:34am,Mon Sterilization: Boiling temp. Range: (55℃~65℃) Steps: ±1℃ 65 ℃ Select [↵] Confirm
	> Sterilization: Ope. time (max)		
	0:10	Set sterilizing time (in hours and minutes)	Operation setup 10:34am,Mon Sterilization: Ope. time (max) Range: (0:05~1:00) Steps: ±0:05 0:10 Select [↵] Confirm

7	Installer setup > Service setup		
7.1	> Pump maximum speed		
	To set the maximum speed of the pump.	Setting the flow rate, max. duty and operation ON/OFF of the pump. Flow rate: XX:X L/min Max. Duty: 0x40 ~ 0xFE, Pump: ON/OFF/Air Purge	Service setup 10:34am,Mon Flow rate Max. Duty Operation 0.0 L/min 0xCE Air Purge Select
7.2	> Pump down		
	To set the pump down operation.	**Pump down operation** ON	Pump down operation in progress! [⏻]OFF
7.3	> Dry concrete		
	To dry the concrete (floor, walls, etc.) during construction. Do not use this menu for any other purposes and in period other than during construction	Edit to set the temperature of dry concrete. ON / Edit	Service setup 10:34am,Mon Dry concrete ON Edit Select [↵] Confirm
	> Edit		
	Stages: 1 Temperature: 25 °C	Heating temperature for drying the concrete. Select the desired stages: 1 ~ 10, range: 1 ~ 99	Service setup 10:34am,Mon Dry concrete: 1/10 Range: (25℃~55℃) Steps: ±1℃ 25 ℃ Select [↵] Confirm
	> ON		
		Confirm the setting temperatures of dry concrete for each stage.	Service setup 10:34am,Mon Dry concrete: Status Stage : 1/10 Water set temp. : 25℃ Actual water temp. :25℃/25℃ [⏻] OFF

Menu	Default Setting	Setting Options / Display
7.4 > Service contact		
To set up to 2 contact names and numbers for the User.	Service engineer's name and contact number. Contact 1 / Contact 2	Service setup 10:34am,Mon Service contact: Contact 1 Contact 2 Select [↵]Confirm
	> Contact 1 / Contact 2	
	Contact name or number. Name / phone icon	Service contact 10:34am,Mon Contact 1 Name : Bryan Adams : 08812345678 Select [↵]Edit
	Input name and number Contact name: alphabet a ~ z. Contact number: 1 ~ 9	Contact-1 ABC/abc 0-9/Other ABCDEFGHIJKLMNOPQR Space STUVWXYZ abcdefghi BS jklmnopqrstuvwxyz Conf Select [↵]Enter Number: 1 2 3 (4 5 6) 7 8 9 - BS * 0 # _ Conf Select [↵]Enter

8 Installer setup > Remote control setup			
• To select whether to use one remote controller or two remote controllers. • Select Single when one remote controller is connected. Select Dual when two remote controllers are connected. Second remote controller can be used for zone 2 room temperature control.	Single	Selection of one or two remote controllers.	Single ▼ Dual
		When Dual is selected, Main remote controller (RC-1) will start to communicate with second remote controller (RC-2) and display "RC-1 & RC-2 sync. in progress". They are ready to be used after this pop up screen disappears.	RC-1 & RC-2 sync. in progress!
		When both remote controllers have communication failure, it will display "Communication with RC-2 failed".	Communication with RC-2 failed! [⮌]Close

5.1.7 Main Components

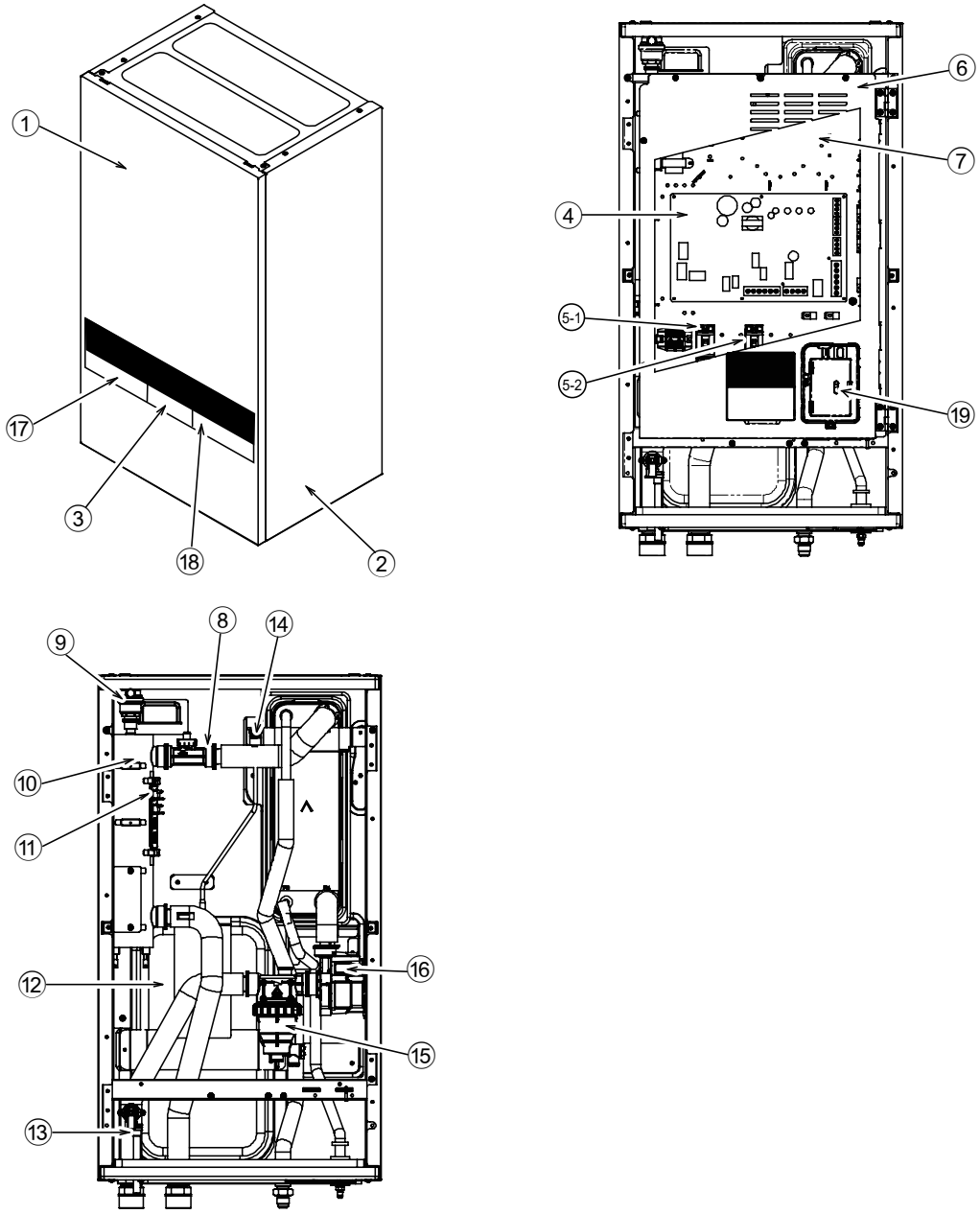

① Cabinet front plate
② Cabinet side plate (2 pieces)
③ Remote controller
④ PCB
⑤-1 Single Phase RCCB/ELCB (Main Power)
⑤-2 Single Phase RCCB/ELCB (Backup Heater)
⑥ Control board cover
⑦ Control board
⑧ Flow sensor
⑨ Air purge valve
⑩ Backup heater
⑪ Overload protector (2 pieces)
⑫ Expansion vessel
⑬ Pressure relief valve
⑭ Water pressure sensor
⑮ Magnetic water filter set
⑯ Water pump
⑰ Left Decoration Panel
⑱ Right Decoration Panel
⑲ Network Adaptor Holder

5.2 Outdoor Unit

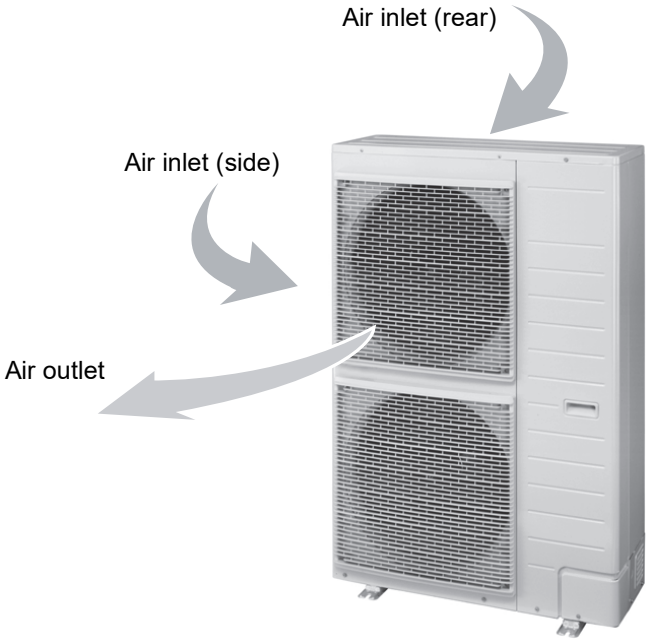

6. Dimensions

6.1 Indoor Unit

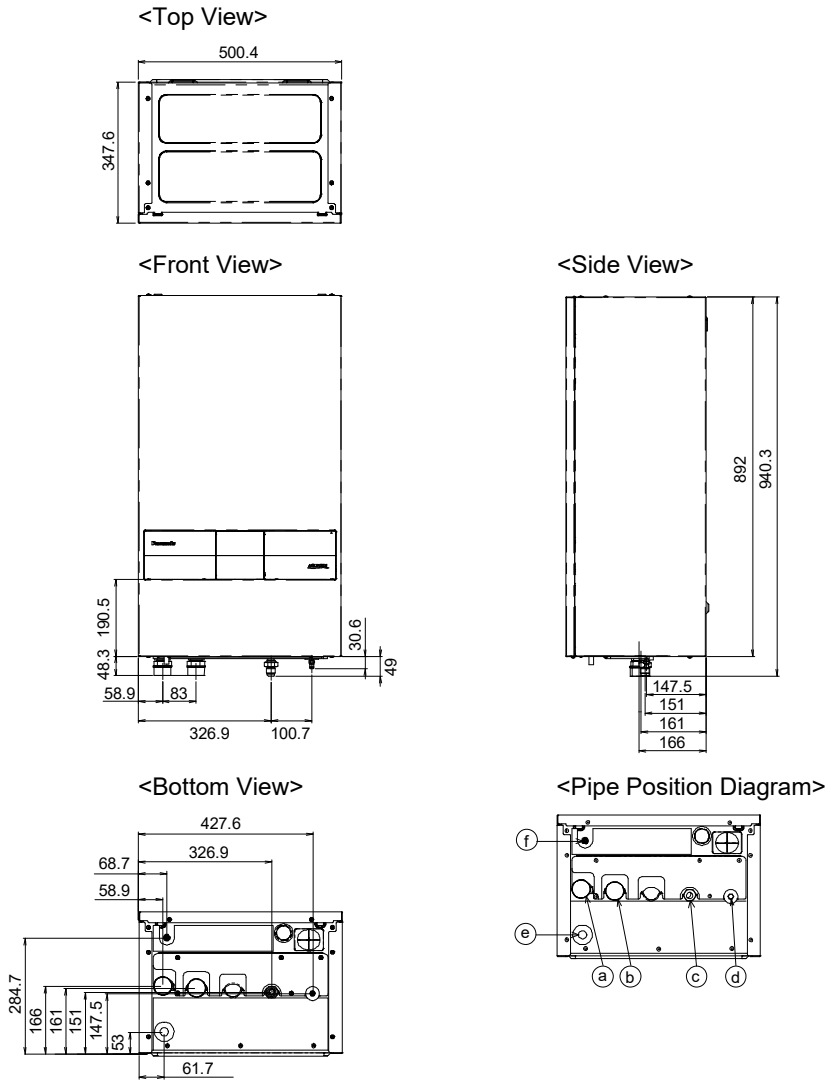

Letter	Pipe Description	Connection Size	
		WH-SDC**	WH-SXC**
ⓐ	Water inlet	R 1¼"	R 1¼"
ⓑ	Water outlet	R 1¼"	R 1¼"
ⓒ	Refrigerant gas	7/8-14UNF	3/4-16UNF
ⓓ	Refrigerant liquid	7/16-20UNF	7/16-20UNF
ⓔ	Drain water hole	-	-
ⓕ	Pressure relief valve drainage	3/8"	3/8"

Unit: mm

6.2 Outdoor Unit

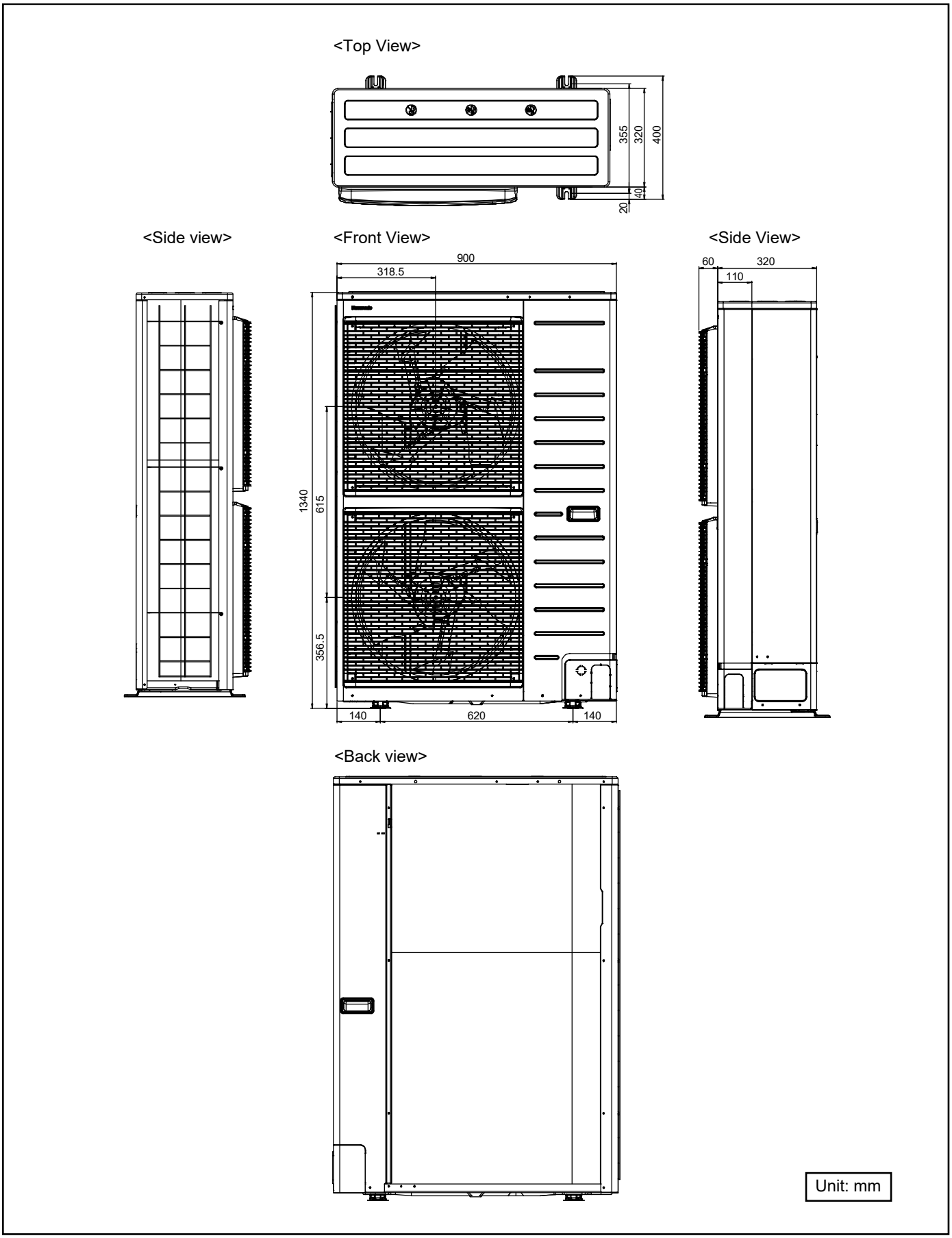

7. Refrigeration and Water Cycle Diagram

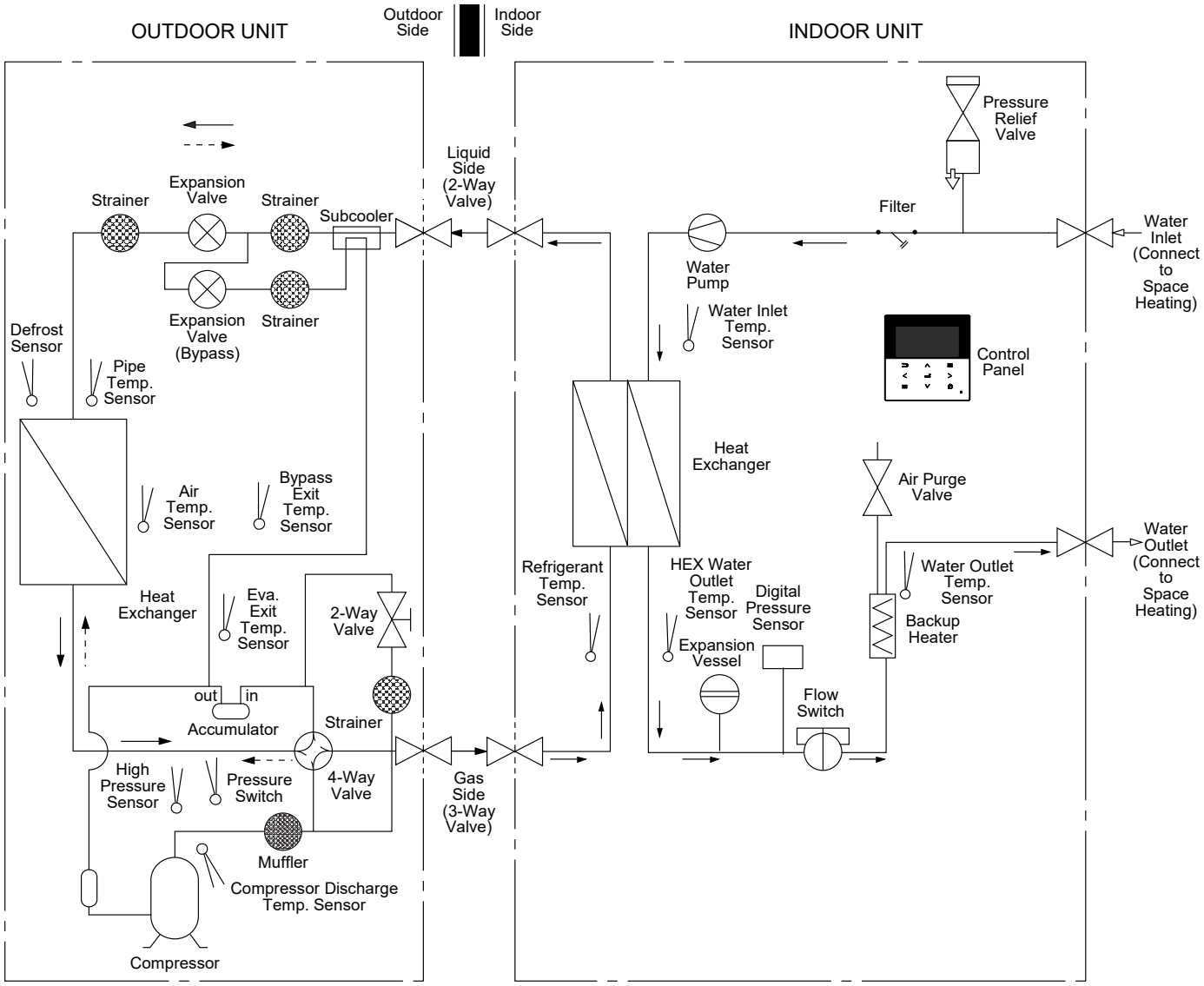

Model	Piping size		Rated Length (m)		Max Elevation (m)	Min. Piping Length (m)	Max. Piping Length (m)	Additional Refrigerant (g/m)
	Gas	Liquid	For Heat Pump Indoor Unit	For Hydromodule + Tank				
UX09*E5*, UX12*E5*, UD12*E5*, UD16*E5*, UX09*E8*, UX12*E8*, UX16*E8*, UD09*E8*, UD12*E8*, UD16*E8*	Ø15.88 mm (5/8")	Ø9.52 mm (3/8")	7	5	20	3	30	50

Example:
If piping length is 30m, the quantity of additional refrigerant should be 1000g. [(30-10)m x 50 g/m = 1000g]
GWP (R410A) = 2088

8. Block Diagram

8.1 WH-SXC09H3E5 WH-UX09HE5

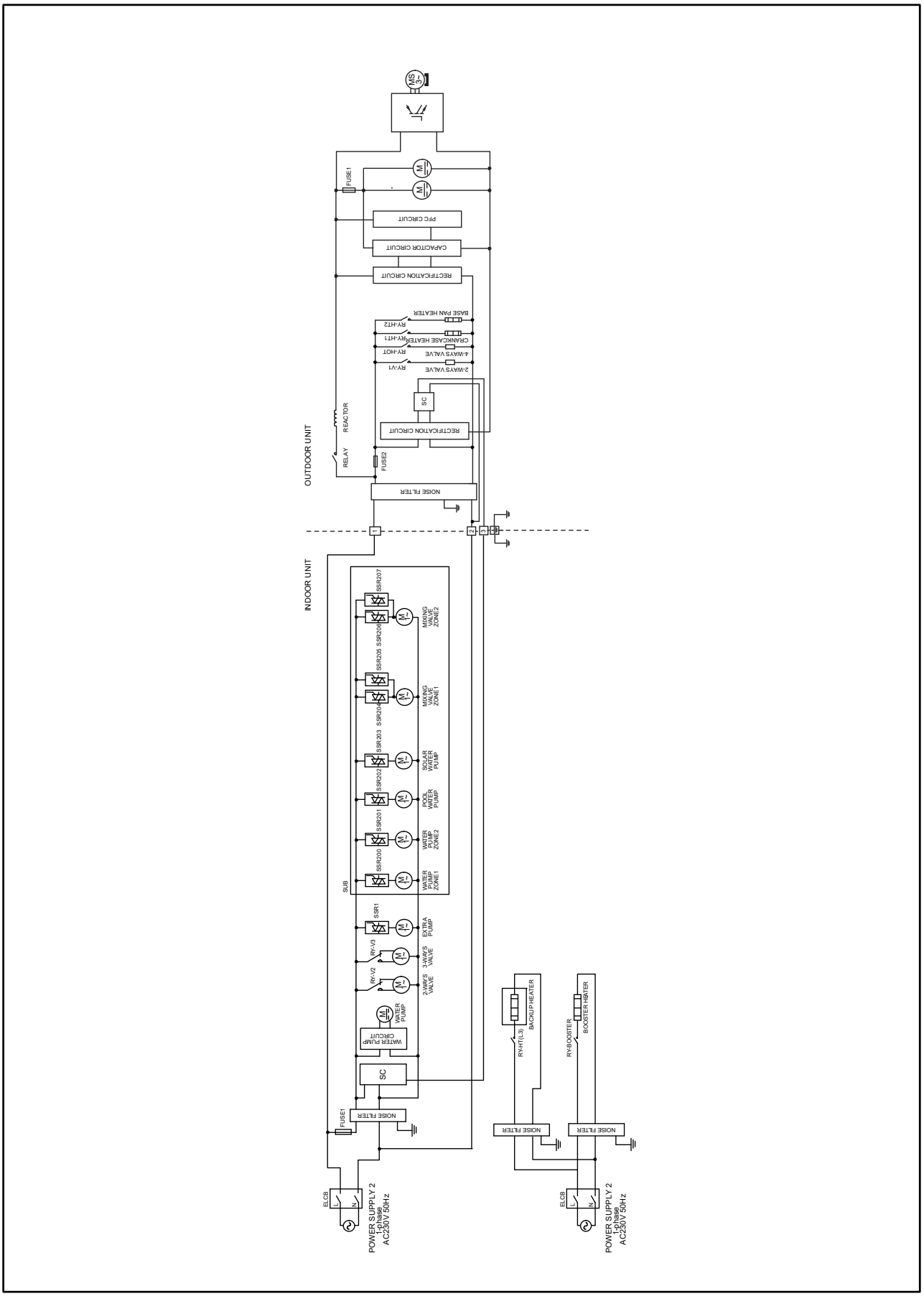

8.2 WH-SXC12H6E5 WH-UX12HE5

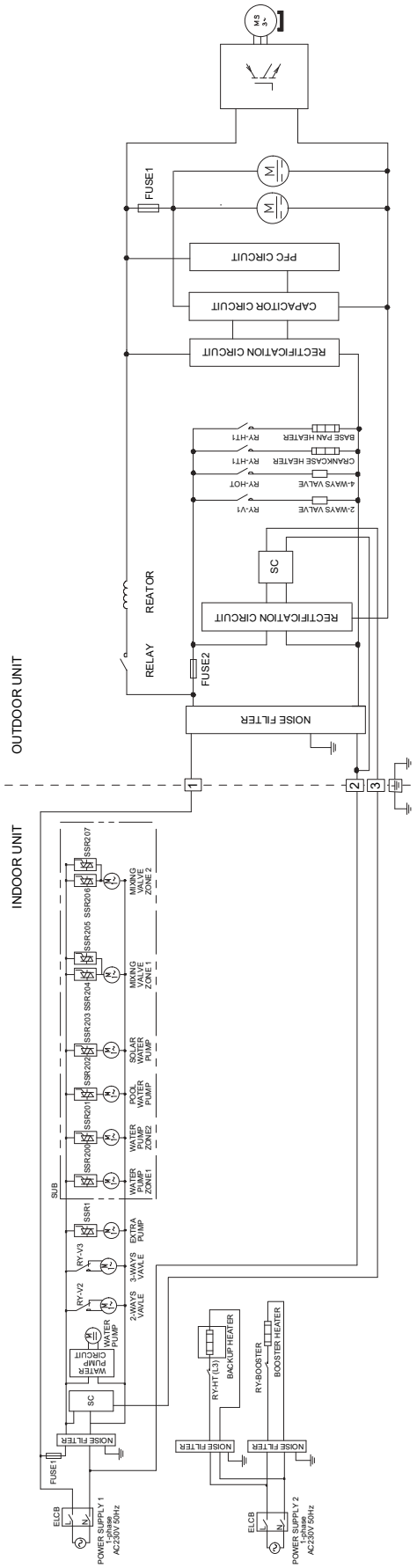

9. Wiring Connection Diagram

9.1 Indoor Unit

9.1.1 WH-SXC09K3E5

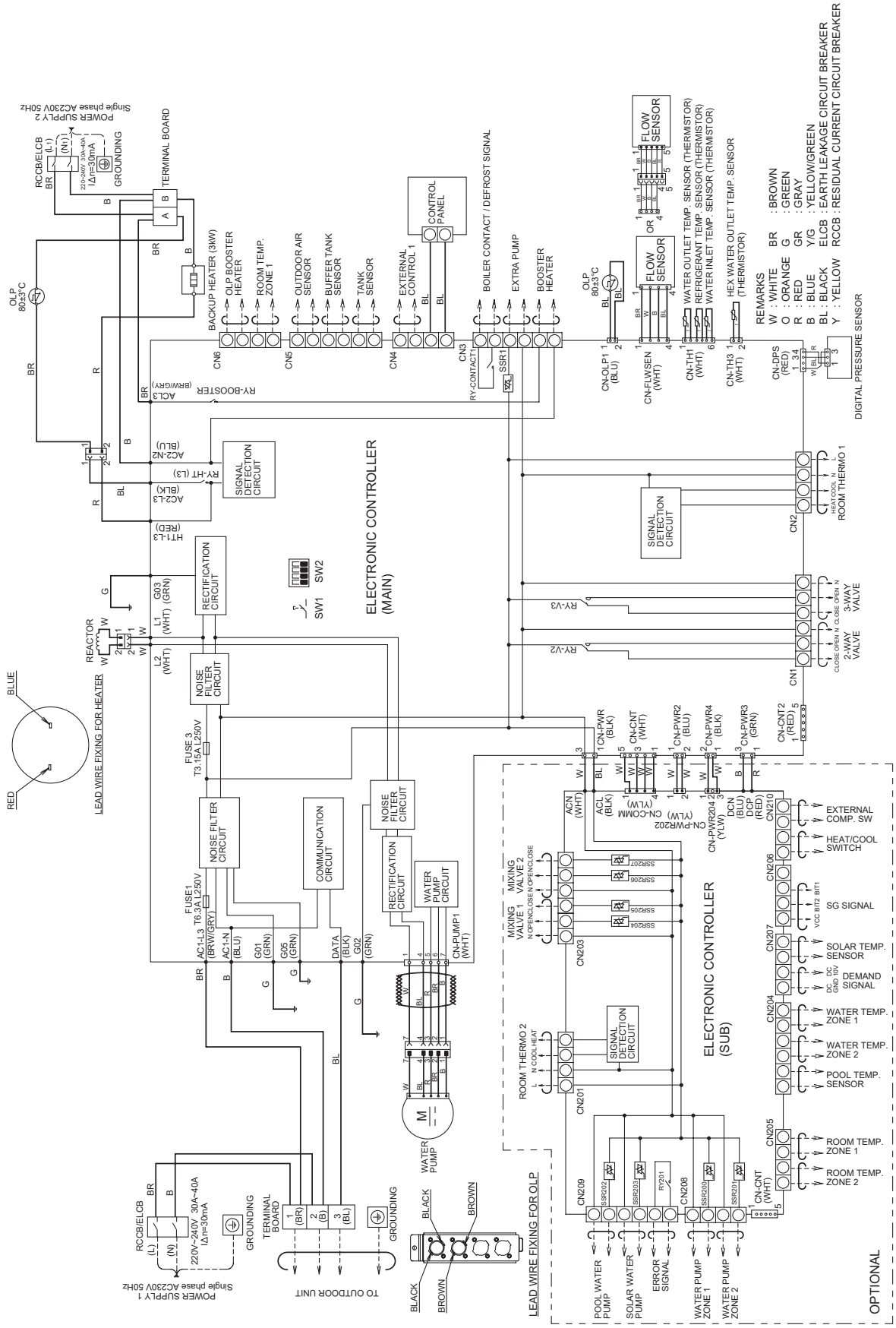

9.1.2 WH-SXC09K6E5 WH-SXC12K6E5

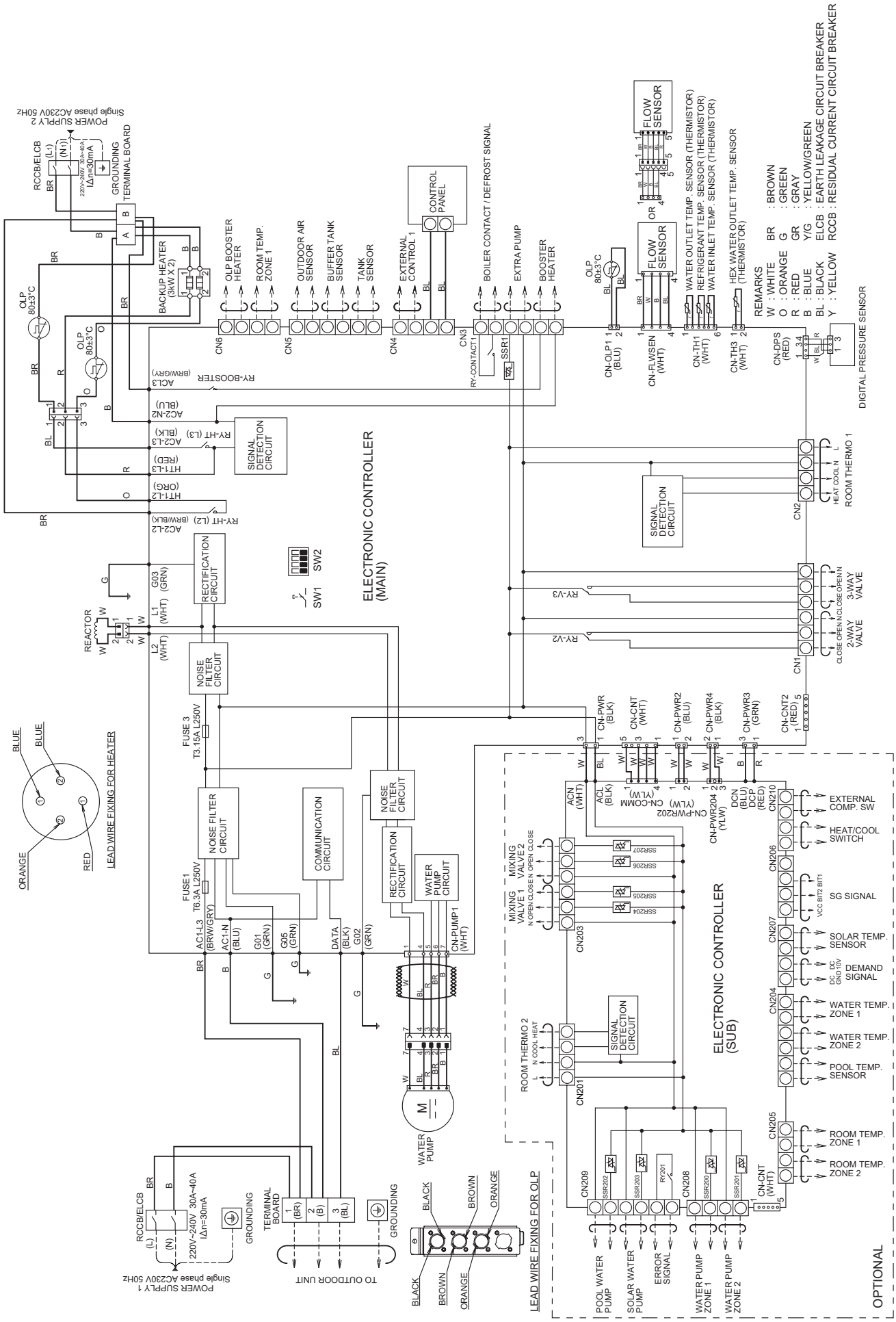

9.2 Outdoor Unit

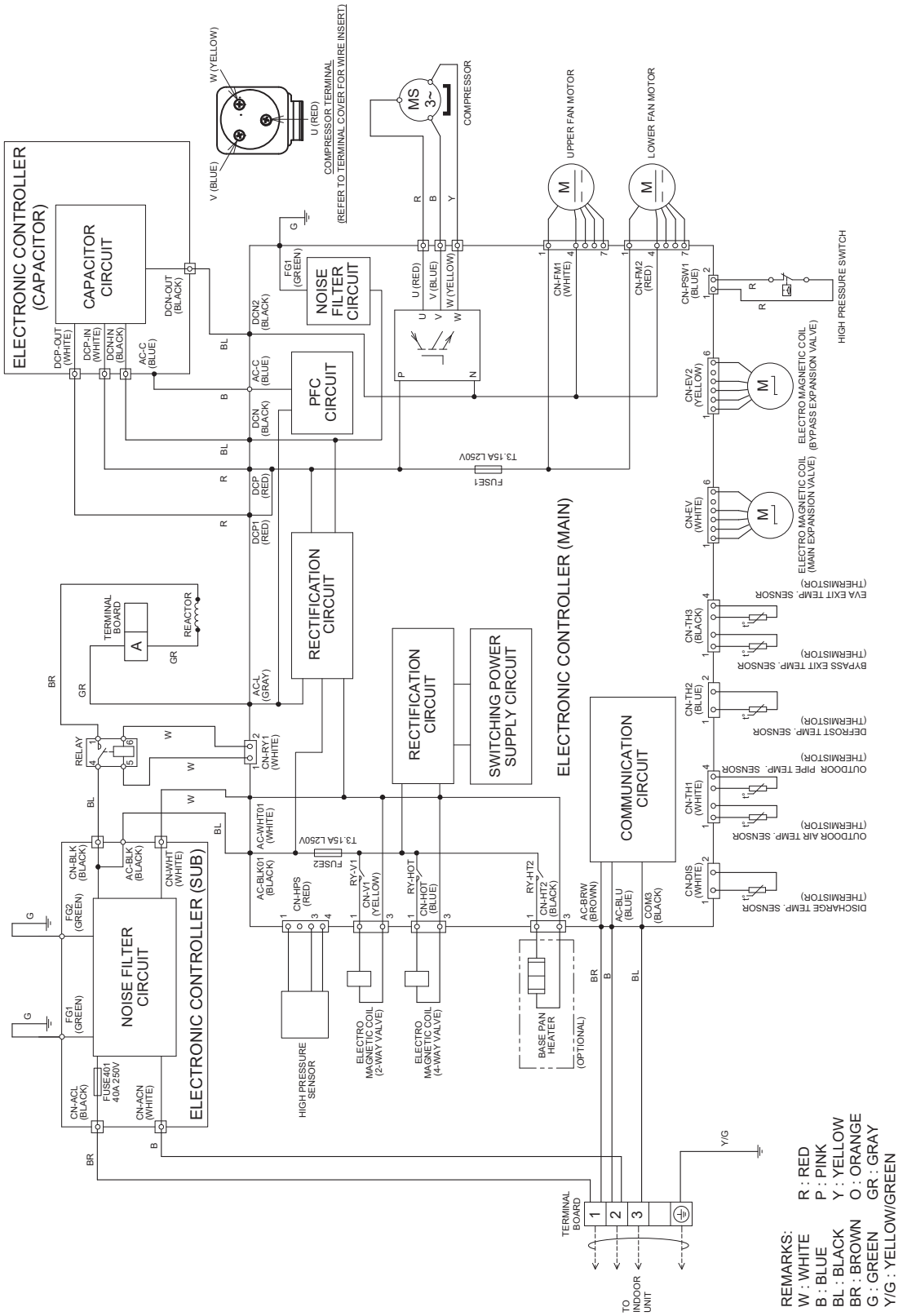

Resistance of Compressor Windings

MODEL	WH-UXZ09KE5 / WH-UXZ12KE5
CONNECTION	9KD420XAD21
U - V	0.722 Ω
V - W	0.707 Ω
U - W	0.708 Ω

Note: Resistance at 20°C of ambient temperature.

10. Electronic Circuit Diagram

10.1 Indoor Unit

10.1.1 WH-SXC09K3E5

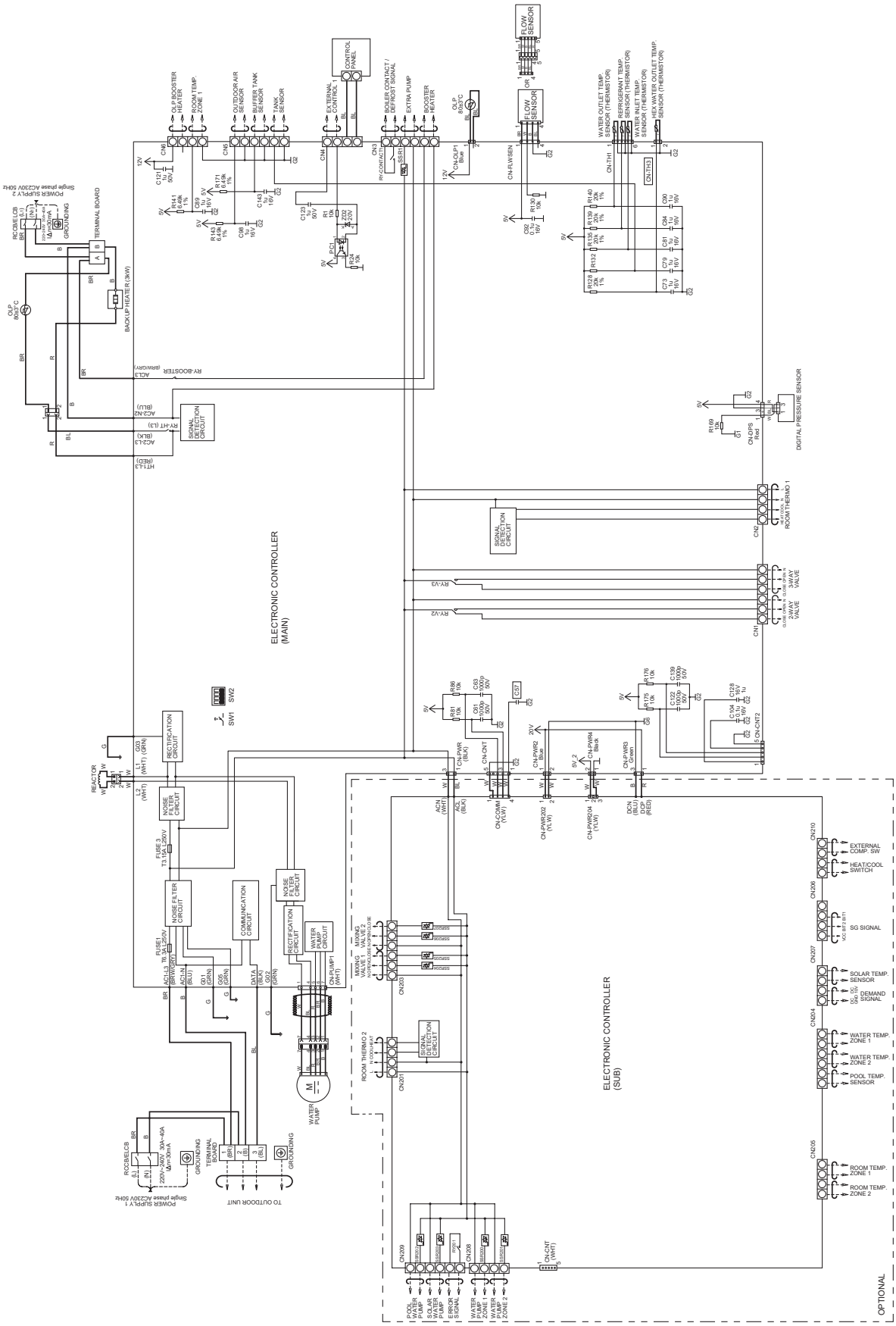

10.1.2 WH-SXC09K6E5 WH-SXC12K6E5

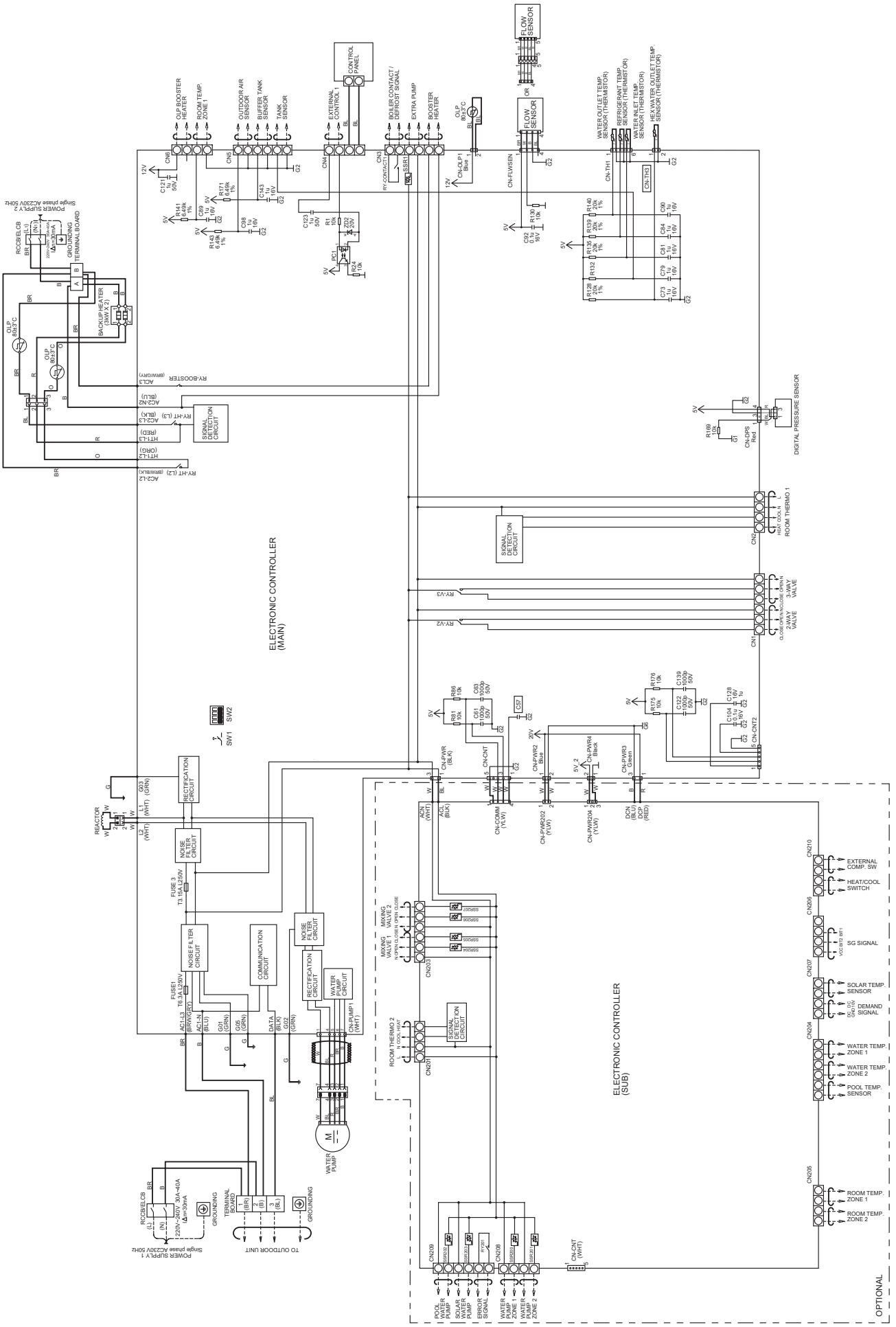

10.2 Outdoor Unit

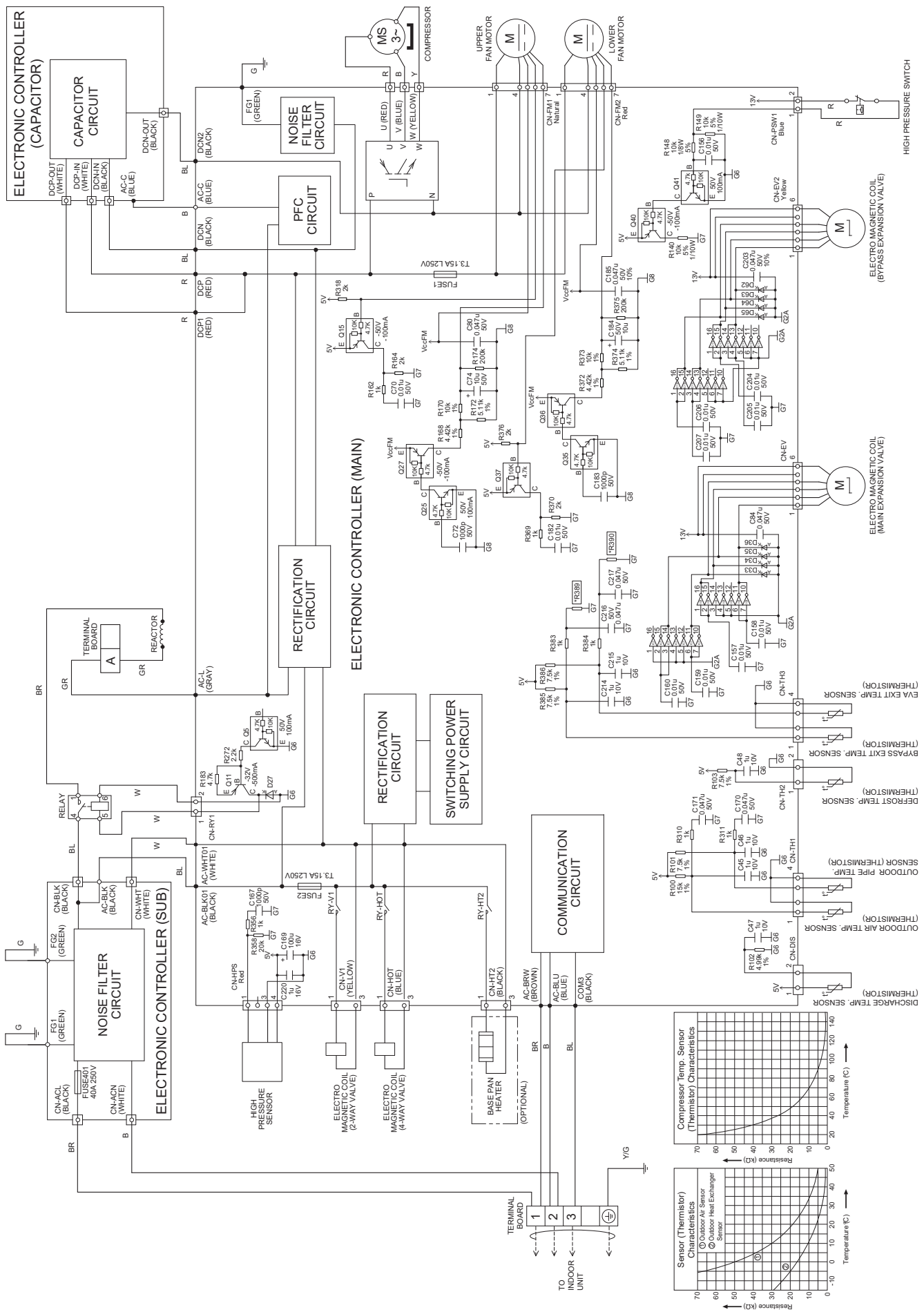

11. Printed Circuit Board

11.1 Indoor Unit

11.1.1 Main Printed Circuit Board

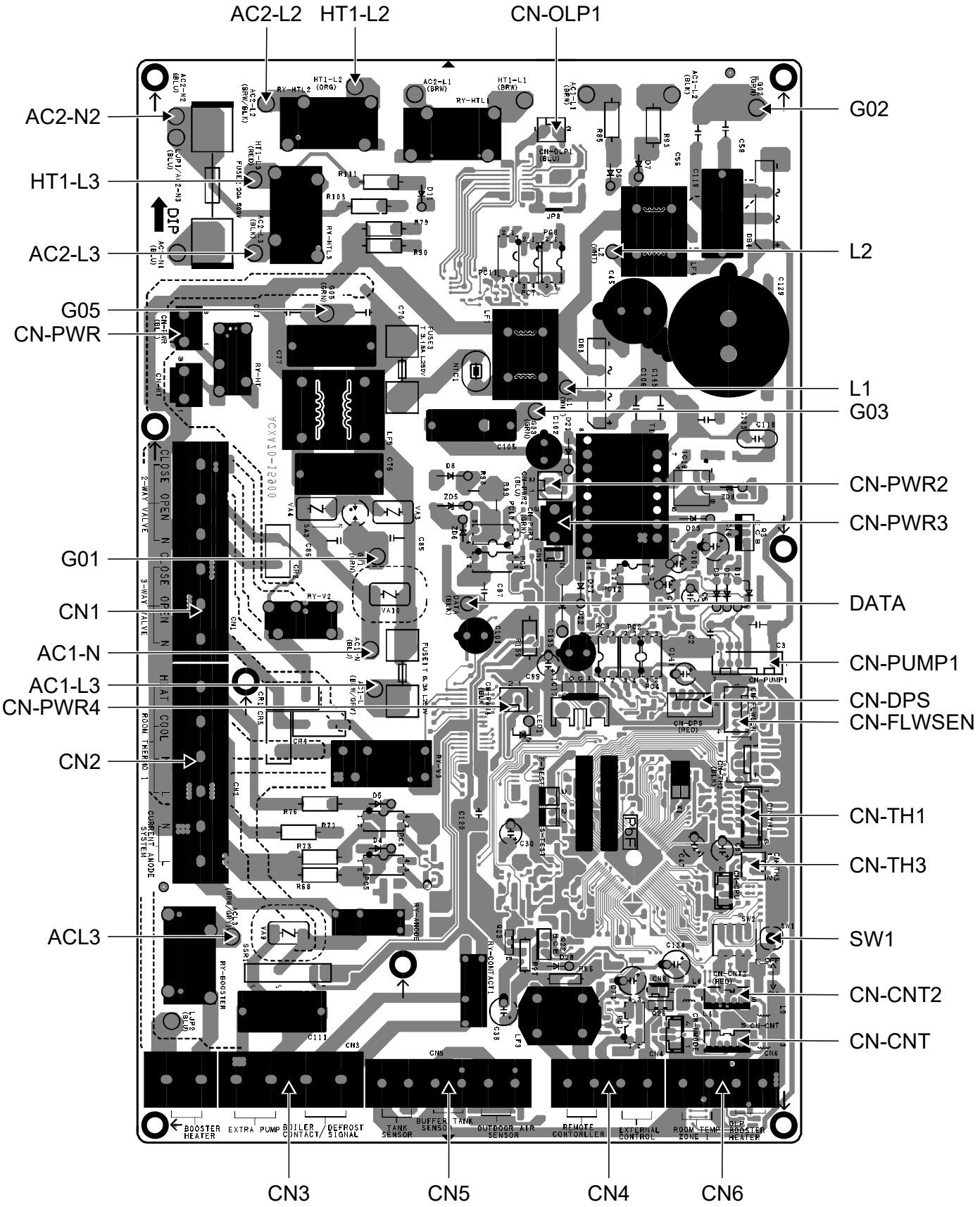

11.1.2 Sub Printed Circuit Board (Optional)

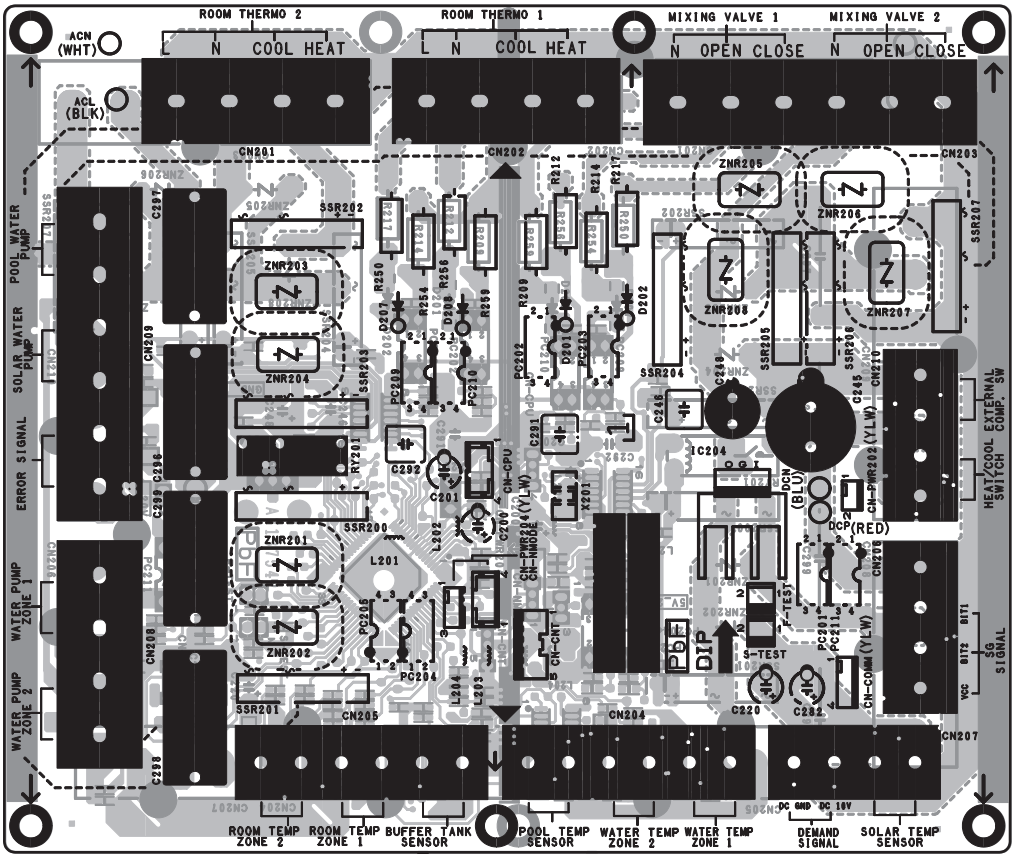
ACN (WHT)
ACL (BLK)
ROOM THERMO 2
L N COOL HEAT
ROOM THERMO 1
L N COOL HEAT
MIXING VALVE 1
N OPEN CLOSE
MIXING VALVE 2
N OPEN CLOSE
POOL WATER PUMP
SOLAR WATER PUMP
ERROR SIGNAL
WATER PUMP ZONE 1
WATER PUMP ZONE 2
HEAT/COOL EXTERNAL COMP. SW
SIGNAL
ROOM TEMP ZONE 2
ROOM TEMP ZONE 1
BUFFER TANK SENSOR
POOL TEMP SENSOR
WATER TEMP ZONE 2
WATER TEMP ZONE 1
DEMAND SIGNAL
SOLAR TEMP SENSOR
DC GND DC 10V
CN201
CN202
CN203
CN204
CN205
CN206
CN207
CN208
CN209
CN210
CN211
CN212
CN-CNT
CN-GPU
CN-PWR204 (YLW)
CN-MODE
CN-PWR203 (YLW)
CN-COM (YLW)
DCN (BLU)
DCP (RED)
S-TEST
F-TEST
PbF
DIP
IC204
L201
L202
L203
L204
RY201
SSR200
SSR201
SSR202
SSR203
SSR204
SSR205
SSR206
SSR207
ZNR201
ZNR202
ZNR203
ZNR204
ZNR205
ZNR206
ZNR207
ZNR208
C220
C282
C292
C201
C200
C245
C248
C249
C250
C251
C252
C253
C254
C255
C256
C257
C258
C259
C260
C261
C262
C263
C264
C265
C266
C267
C268
C269
C270
C271
C272
C273
C274
C275
C276
C277
C278
C279
C280
C281
C283
C284
C285
C286
C287
C288
C289
C290
C291
C293
C294
C295
C296
C297
C298
C299
C300
C301
C302
C303
C304
C305
C306
C307
C308
C309
C310
C311
C312
C313
C314
C315
C316
C317
C318
C319
C320
C321
C322
C323
C324
C325
C326
C327
C328
C329
C330
C331
C332

11.2 Outdoor Unit

11.2.1 Main Printed Circuit Board

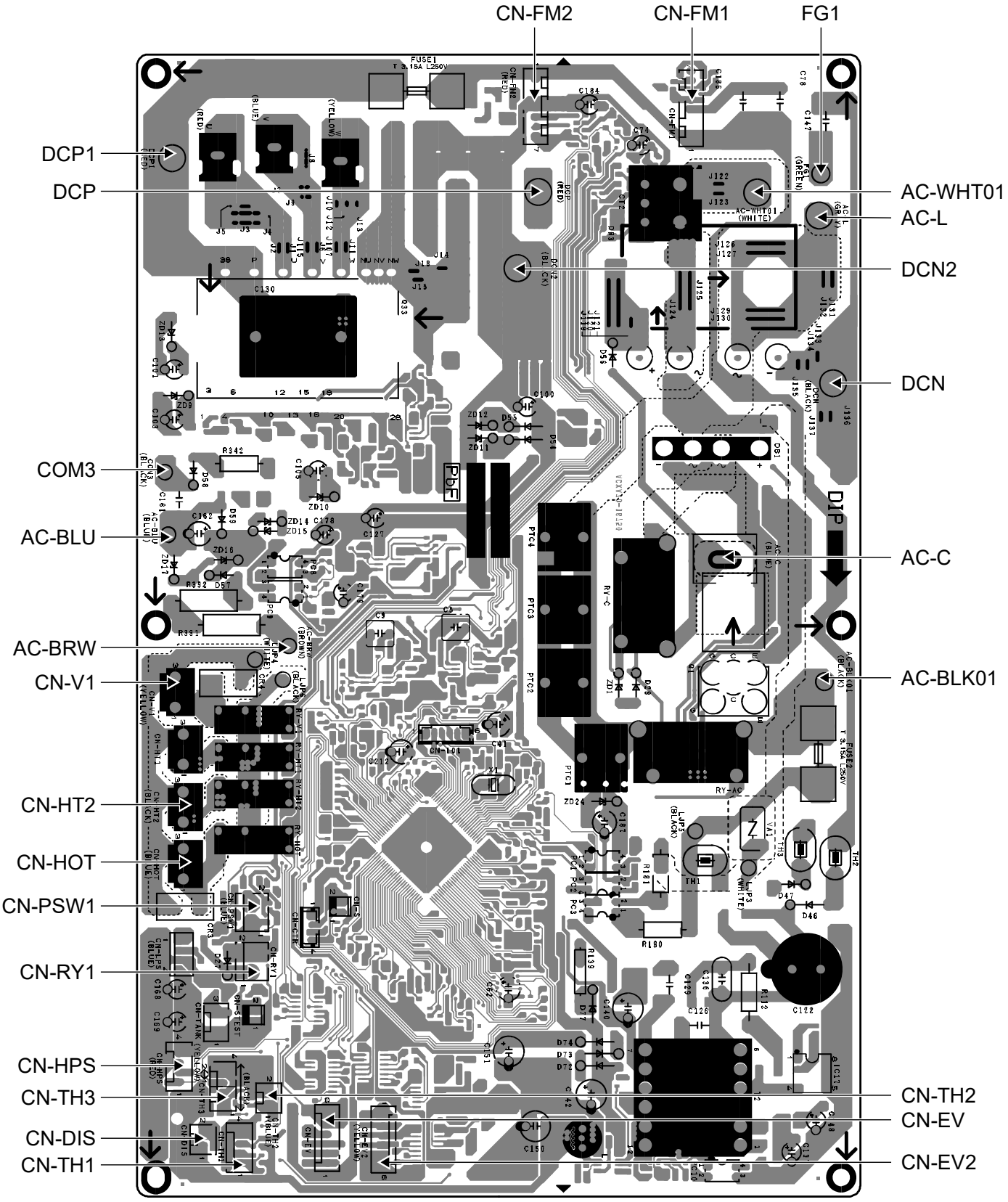

11.2.2 Noise Filter Printed Circuit Board

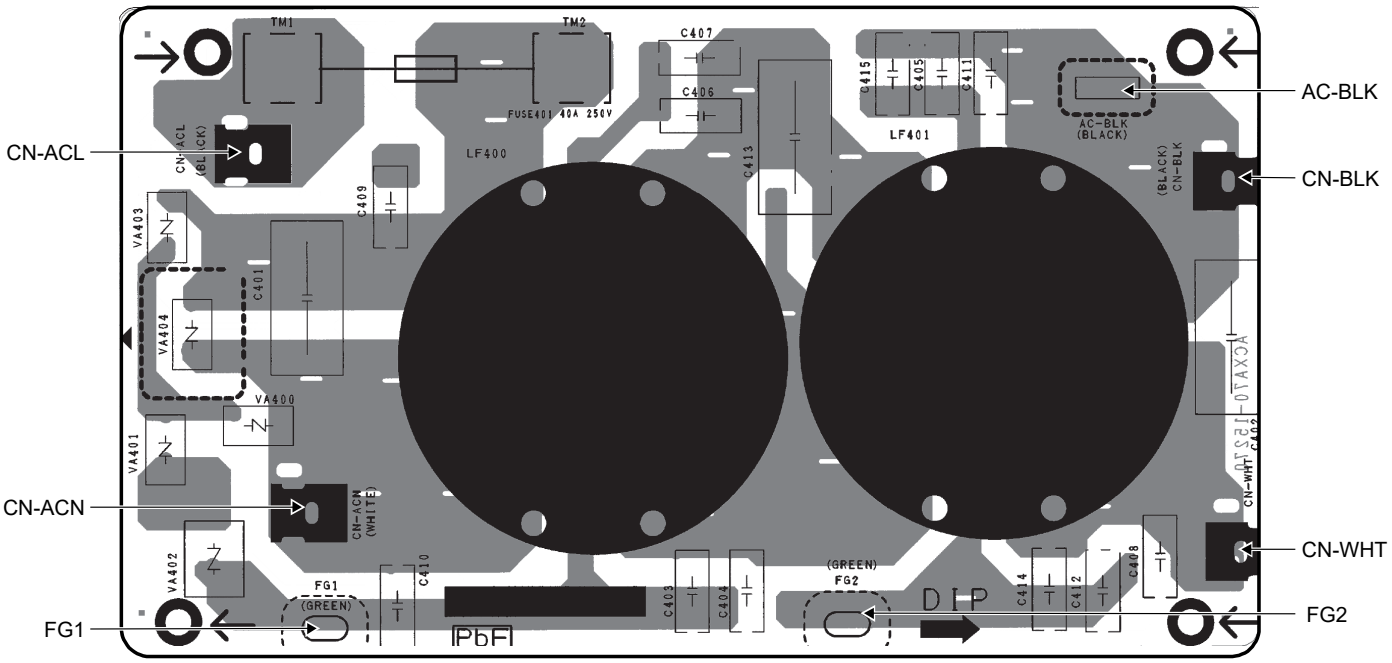

11.2.3 Capacitor Printed Board

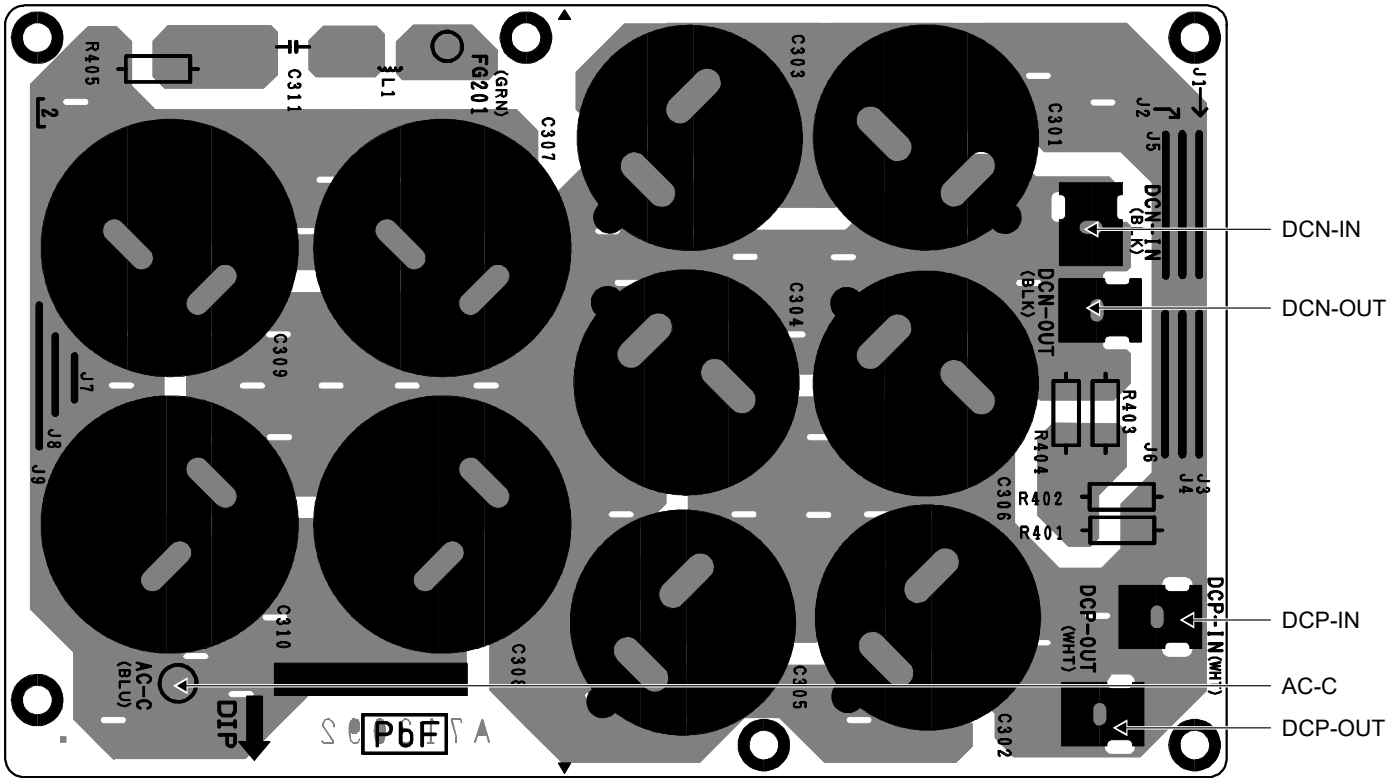

12. Installation Instruction

12.1 Indoor Floor Area Requirement

- **If the total refrigerant charge in the system is <1.84 kg**, no additional minimum floor area is required.
- **If the total refrigerant charge in the system is ≥1.84 kg**, additional minimum floor area requirements is complied as described below:

Symbol	Description	Unit
m_c	Total refrigerant charge in system	kg
m_{max}	Maximum refrigerant charge allowed	kg
m_{excess}	m_c - m_{max}	kg
H	Installation height	m
VA_{min}	Minimum ventilation opening area	cm^2

Total refrigerant charge in system, m_c (kg)
= Pre-charged refrigerant amount in unit (kg)
+ Additional refrigerant amount after installation (kg)

A) Determine **Maximum refrigerant charge allowed, m_{max}**

1. Calculate Installation Room Area, A_{room}.
2. Based on Table I, select m_{max} which corresponds to the calculated A_{room} value.
3. If $m_{max} \geq m_c$, the unit can be installed in the installation room with the specified installation height in Table I and without additional room area or any additional ventilation.
4. Else, proceed to B) and C).

B) Determine **Total Floor Area of A_{room} and B_{room} compliance to $A_{min\ total}$**

1. Calculate the B_{room} area adjacent to the A_{room}.
2. Determine the $A_{min\ total}$ based on the Total Refrigerant Charge, m_c from Table II.
3. The total floor area of both A_{room} and B_{room} must exceed $A_{min\ total}$.

C) Determine **Minimum Venting Opening Area**, **VA_{min}** for natural ventilation

1. From Table III, calculate m_{excess}.
2. Then determine VA_{min} corresponding to the calculated m_{excess} for natural ventilation between A_{room} and B_{room}.
3. The unit can be installed at specific room only when the following conditions are fulfilled:
   - Two permanent openings, one at bottom, another at top, for ventilation purposes are made between A_{room} and B_{room}.
   - **Bottom opening:**
     - Must comply to the minimum area requirement of VA_{min}.
     - Opening must be located ≤300mm from the floor.
     - At least 50% of required opening area must be ≤200mm from the floor.
     - The bottom of the opening shall not be higher than the point of release when the unit is installed and must be situated ≤100mm above the floor.
     - Must be as close as possible to the floor and lower than H.
   - **Top opening:**
     - The total size of the Top opening must be more than 50% of VA_{min}.
     - Opening must be located ≥1500mm above the floor.

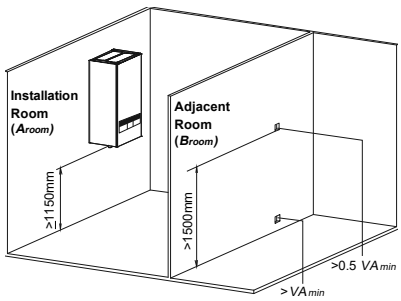

   - The height of the openings must more than 20mm.
   - A direct ventilation opening to outside is **NOT** encouraged for ventilation opening (the user can block the opening when it is cold).

For WH-SDC0309K3E5, WH-SDC0309K6E5

Table I - Maximum refrigerant charge allowed in a room

A_{room} (m^2)	Maximum refrigerant charge in a room (m_{max}) (kg)							
	H = 1.15m	H = 1.20m	H = 1.30m	H = 1.40m	H = 1.50m	H = 1.60m	H = 1.70m	H = 1.80m
1	0.265	0.276	0.299	0.322	0.345	0.368	0.391	0.414
2	0.530	0.553	0.599	0.645	0.691	0.737	0.783	0.829
3	0.794	0.829	0.898	0.967	1.036	1.105	1.174	1.243
4	1.059	1.105	1.197	1.289	1.382	1.474	1.566	1.658
5	1.324	1.382	1.497	1.612	1.727	1.842	1.957	2.072
6	1.589	1.658	1.796	1.934	2.072	2.210	2.349	2.487
7	1.738	1.814	1.965	2.116	2.267	2.418	2.570	2.721
8	1.858	1.939	2.101	2.262	2.424	2.585	2.747	2.909
9	1.971	2.057	2.228	2.399	2.571	2.742	2.914	3.085
10	2.078	2.168	2.349	2.529	2.710	2.891	3.071	3.252
11	2.179	2.274	2.463	2.653	2.842	3.032	3.221	3.411
12	2.276	2.375	2.573	2.771	2.969	3.166	3.364	3.562
13	2.369	2.472	2.678	2.884	3.090	3.296	3.502	3.708

- For intermediate H values, the value that corresponds to the lower H value from the table considered.
  Example:
  For H = 1.25 m, the value that corresponds to "H = 1.20 m" is considered.
- For intermediate A_{room} values, the value that corresponds to the lower A_{room} value from the table is considered.
  Example:
  For A_{room} = 10.5 m^2, the value that corresponds to "A_{room} = 10 m^2" is considered.

Table II - Minimum floor area

m_c (kg)	Minimum floor area ($A_{min\ total}$ (m^2))							
	H = 1.15m	H = 1.20m	H = 1.30m	H = 1.40m	H = 1.50m	H = 1.60m	H = 1.70m	H = 1.80m
1.84	7.84	7.20	6.15	5.71	5.33	4.99	4.70	4.44
1.86	8.02	7.36	6.27	5.77	5.39	5.05	4.75	4.49
1.88	8.19	7.52	6.41	5.83	5.44	5.10	4.80	4.54
1.90	8.36	7.68	6.54	5.89	5.50	5.16	4.85	4.58
1.92	8.54	7.84	6.68	5.96	5.56	5.21	4.91	4.63
1.94	8.72	8.01	6.82	6.02	5.62	5.27	4.96	4.68
1.96	8.90	8.17	6.96	6.08	5.67	5.32	5.01	4.73
1.98	9.08	8.34	7.11	6.14	5.73	5.37	5.06	4.78
2.00	9.27	8.51	7.25	6.25	5.79	5.43	5.11	4.83
2.02	9.45	8.68	7.40	6.38	5.85	5.48	5.16	4.87
2.04	9.64	8.85	7.54	6.51	5.91	5.54	5.21	4.92
2.06	9.83	9.03	7.69	6.63	5.96	5.59	5.26	4.97
2.08	10.02	9.21	7.84	6.76	6.02	5.65	5.31	5.02
2.10	10.22	9.38	8.00	6.89	6.08	5.70	5.37	5.07
2.12	10.41	9.56	8.15	7.03	6.14	5.75	5.42	5.12
2.14	10.61	9.74	8.30	7.16	6.24	5.81	5.47	5.16
2.16	10.81	9.93	8.46	7.29	6.35	5.86	5.52	5.21
2.18	11.01	10.11	8.62	7.43	6.47	5.92	5.57	5.26
2.20	11.21	10.30	8.77	7.57	6.59	5.97	5.62	5.31
2.22	11.42	10.49	8.93	7.70	6.71	6.03	5.67	5.36
2.24	11.62	10.68	9.10	7.84	6.83	6.08	5.72	5.40
2.26	11.83	10.87	9.26	7.98	6.96	6.13	5.77	5.45
2.28	12.04	11.06	9.42	8.13	7.08	6.22	5.82	5.50
2.30	12.26	11.26	9.59	8.27	7.20	6.33	5.88	5.55

- For intermediate H values, the value that corresponds to the lower H value from the table considered.
  Example:
  For H = 1.25 m, the value that corresponds to "H = 1.20 m" is considered.
- For intermediate m_c values, the value that corresponds to the higher m_c value from the table is considered.
  Example:
  If m_c = 1.85 kg, the value that corresponds to "m_c = 1.86 kg" is considered.
- Systems with total refrigerant charge lower than 1.84 kg are not subjected to any room area requirements.
- Charges above 2.30 kg are not allowed in the unit.

Table III - Minimum venting opening area for natural ventilation

m_c (kg)	m_{max} (kg)	m_{excess} (kg) = m_c - m_{max}	Minimum venting opening area (VA_{min}) (cm^2)							
			H = 1.15m	H = 1.20m	H = 1.30m	H = 1.40m	H = 1.50m	H = 1.60m	H = 1.70m	H = 1.80m
2.3	0.1	2.2	643	629	605	583	563	545	529	514
2.3	0.3	2.0	584	572	550	530	512	495	481	467
2.3	0.5	1.8	526	515	495	477	461	446	433	420
2.3	0.7	1.6	468	458	440	424	409	396	385	374
2.3	0.9	1.4	409	400	385	371	358	347	336	327
2.3	1.1	1.2	351	343	330	318	307	297	288	280
2.3	1.3	1.0	292	286	275	265	256	248	240	234
2.3	1.5	0.8	234	229	220	212	205	198	192	187
2.3	1.7	0.6	179	172	165	159	154	149	144	140
2.3	1.9	0.4	126	121	112	106	102	99	96	93
2.3	2.1	0.2	66	64	59	54	51	50	48	47
2.3	2.2	0.1	34	33	30	28	26	25	24	23

- For intermediate H values, the value that corresponds to the lower H value from the table considered.
  Example:
  For H = 1.25 m, the value that corresponds to "H = 1.20 m" is considered.
- For intermediate m_{excess} values, the value that corresponds to the higher m_{excess} value from the table is considered.
  Example:
  m_{excess} = 1.45 kg, the value that corresponds to "m_{excess} = 1.6 kg" is considered.

For WH-SXC09K3E5, WH-SXC09K6E5, WH-SXC12K6E5

Table I - Maximum refrigerant charge allowed in a room

A_{room} (m^2)	Maximum refrigerant charge in a room (m_{max}) (kg)							
	H = 1.15m	*H* = 1.20m	*H* = 1.30m	*H* = 1.40m	*H* = 1.50m	*H* = 1.60m	*H* = 1.70m	*H* = 1.80m
1	0.265	0.276	0.299	0.322	0.345	0.368	0.391	0.414
2	0.530	0.553	0.599	0.645	0.691	0.737	0.783	0.829
3	0.794	0.829	0.898	0.967	1.036	1.105	1.174	1.243
4	1.059	1.105	1.197	1.289	1.382	1.474	1.566	1.658
5	1.324	1.382	1.497	1.612	1.727	1.842	1.957	2.072
6	1.589	1.658	1.796	1.934	2.072	2.210	2.349	2.487
7	1.738	1.814	1.965	2.116	2.267	2.418	2.570	2.721
8	1.858	1.939	2.101	2.262	2.424	2.585	2.747	2.909
9	1.971	2.057	2.228	2.399	2.571	2.742	2.914	3.085
10	2.078	2.168	2.349	2.529	2.710	2.891	3.071	3.252
11	2.179	2.274	2.463	2.653	2.842	3.032	3.221	3.411
12	2.276	2.375	2.573	2.771	2.969	3.166	3.364	3.562
13	2.369	2.472	2.678	2.884	3.090	3.296	3.502	3.708

- For intermediate *H* values, the value that corresponds to the lower *H* value from the table considered.
  Example:
  For *H* = 1.25 m, the value that corresponds to "*H* = 1.20 m" is considered.
- For intermediate A_{room} values, the value that corresponds to the lower A_{room} value from the table is considered.
  Example:
  For A_{room} = 10.5 m^2, the value that corresponds to "A_{room} = 10 m^2" is considered.

Table II - Minimum floor area

m_c (kg)	Minimum floor area ($A_{min\ total}$ (m^2))							
	H = 1.15m	*H* = 1.20m	*H* = 1.30m	*H* = 1.40m	*H* = 1.50m	*H* = 1.60m	*H* = 1.70m	*H* = 1.80m
1.84	7.84	7.20	6.15	5.71	5.33	4.99	4.70	4.44
1.86	8.02	7.36	6.27	5.77	5.39	5.05	4.75	4.49
1.88	8.19	7.52	6.41	5.83	5.44	5.10	4.80	4.54
1.90	8.36	7.68	6.54	5.89	5.50	5.16	4.85	4.58
1.92	8.54	7.84	6.68	5.96	5.56	5.21	4.91	4.63
1.94	8.72	8.01	6.82	6.02	5.62	5.27	4.96	4.68
1.96	8.90	8.17	6.96	6.08	5.67	5.32	5.01	4.73
1.98	9.08	8.34	7.11	6.14	5.73	5.37	5.06	4.78
2.00	9.27	8.51	7.25	6.25	5.79	5.43	5.11	4.83
2.02	9.45	8.68	7.40	6.38	5.85	5.48	5.16	4.87
2.04	9.64	8.85	7.54	6.51	5.91	5.54	5.21	4.92
2.06	9.83	9.03	7.69	6.63	5.96	5.59	5.26	4.97
2.08	10.02	9.21	7.84	6.76	6.02	5.65	5.31	5.02
2.10	10.22	9.38	8.00	6.89	6.08	5.70	5.37	5.07
2.12	10.41	9.56	8.15	7.03	6.14	5.75	5.42	5.12
2.14	10.61	9.74	8.30	7.16	6.24	5.81	5.47	5.16
2.16	10.81	9.93	8.46	7.29	6.35	5.86	5.52	5.21
2.18	11.01	10.11	8.62	7.43	6.47	5.92	5.57	5.26
2.20	11.21	10.30	8.77	7.57	6.59	5.97	5.62	5.31

- For intermediate *H* values, the value that corresponds to the lower *H* value from the table considered.
  Example:
  For *H* = 1.25 m, the value that corresponds to "*H* = 1.20 m" is considered.
- For intermediate m_c values, the value that corresponds to the higher m_c value from the table is considered.
  Example:
  If m_c = 1.85 kg, the value that corresponds to "m_c = 1.86 kg" is considered.
- Systems with total refrigerant charge lower than 1.84 kg are not subjected to any room area requirements.
- Charges above 2.20 kg are not allowed in the unit.

Table III - Minimum venting opening area for natural ventilation

m_c (kg)	m_{max} (kg)	m_{excess} (kg) = m_c - m_{max}	Minimum venting opening area (VA_{min}) (cm^2)							
			H = 1.15m	*H* = 1.20m	*H* = 1.30m	*H* = 1.40m	*H* = 1.50m	*H* = 1.60m	*H* = 1.70m	*H* = 1.80m
2.2	0.1	2.1	614	601	577	556	537	520	505	490
2.2	0.3	1.9	555	543	522	503	486	471	457	444
2.2	0.5	1.7	497	486	467	450	435	421	409	397
2.2	0.7	1.5	438	429	412	397	384	372	360	350
2.2	0.9	1.3	380	372	357	344	333	322	312	304
2.2	1.1	1.1	321	315	302	291	281	272	264	257
2.2	1.3	0.9	263	257	247	238	230	223	216	210
2.2	1.5	0.7	205	200	192	185	179	173	168	163
2.2	1.7	0.5	149	143	137	132	128	124	120	117
2.2	1.9	0.3	95	91	84	79	77	74	72	70
2.2	2.1	0.1	33	32	29	27	26	25	24	23
2.2	2.2	0	0	0	0	0	0	0	0	0

- For intermediate *H* values, the value that corresponds to the lower *H* value from the table considered.
  Example:
  For *H* = 1.25 m, the value that corresponds to "*H* = 1.20 m" is considered.
- For intermediate m_{excess} values, the value that corresponds to the higher m_{excess} value from the table is considered.
  Example:
  m_{excess} = 1.45 kg, the value that corresponds to "m_{excess} = 1.6 kg" is considered.

Attached Accessories

No.	Accessories part	Qty.	No.	Accessories part	Qty.
1	Installation plate	1	4	Installation plate	1
2	Drain elbow	1	5	Screw	3
3	Packing	1	6	Reducing Adapter (For WH-SDC** Only)	1

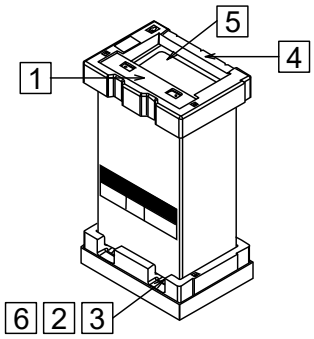

Optional Accessories

No.	Accessories part	Qty.
7	Remote Controller Case	1
8	Network Adaptor (CZ-TAW1B) and Extension Cable (CZ-TAW1-CBL)	1
9	Optional PCB (CZ-NS5P)	1

Field Supply Accessories (Optional)

No.	Part		Model	Specification	Maker
i	2-way valve kit *Cooling model	Electromotoric Actuator	SFA21/18	AC230V	Siemens
		2-port Valve	VVI46/25	-	Siemens
ii	3-way valve kit	Electromotoric Actuator	SFA21/18	AC230V	Siemens
		3-port Valve	VVI46/25	-	Siemens
iii	Room thermostat	Wired	PAW-A2W-RTWIRED	AC230V	-
		Wireless	PAW-A2W-RTWIRELESS		
iv	Mixing valve	-	167032	AC230V	Caleffi
v	Pump	-	Yonos 25/6	AC230V	Wilo
vi	Buffer tank sensor	-	PAW-A2W-TSBU	-	-
vii	Outdoor sensor	-	PAW-A2W-TSOD	-	-
viii	Zone water sensor	-	PAW-A2W-TSHC	-	-
ix	Zone room sensor	-	PAW-A2W-TSRT	-	-
x	Solar sensor	-	PAW-A2W-TSSO	-	-

- It is recommended to purchase the field supply accessories listed in above table.

12.2 Indoor Unit

12.2.1 Select the Best Location

Before choosing the installation site, obtain user approval.

- There should not be any heat source or steam near the unit.
- A place where air circulation in the room is good.
- A place where drainage can be easily done (e.g. Utility room).
- A place where Indoor Unit's operation noise will not cause discomfort to the user.
- A place where Indoor Unit is far from door way.
- Ensure to keep minimum distance of spaces as illustrated below from wall, ceiling, or other obstacles.
- Recommended installation height for Indoor Unit shall be at least 1150 mm.
- Must install on a vertical wall.
- A place where flammable gas leaking might not occur.
- When install electrical equipment at wooden building of metal lath or wire lath, according to electrical facility technical standard, no electrical contact between equipment and building is allowed. Insulator must be installed in between.
- Do not install the unit at outdoor. This is designed for indoor installation only.

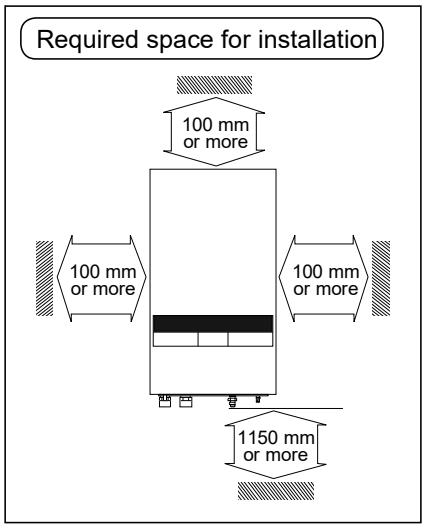

12.2.2 How to Fix Installation Plate

The mounting wall is strong and solid enough to prevent it from vibration

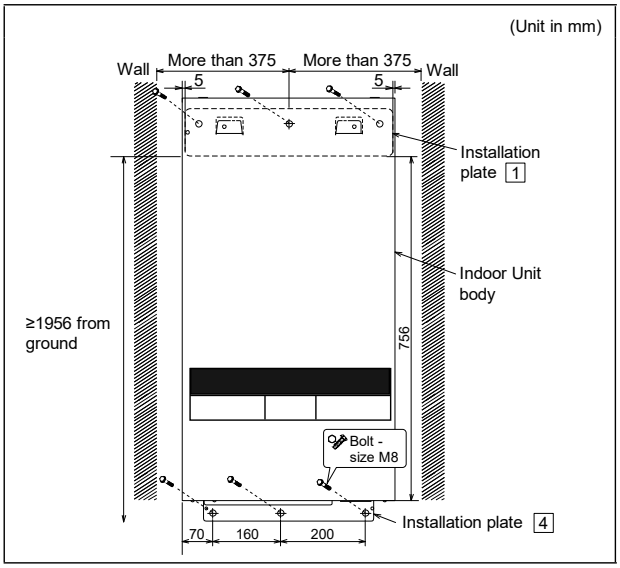

The centre of installation plate should be at more than 375 mm at right and left of the wall.
The distance from installation plate edge to ground should more than 1956 mm.

- Always mount the installation plate horizontally plate by aligning the marking thread and using a level gauge.
- Mount the installation plate on the wall with 6 sets of plug, bolt and washer (all non-supply) with size M8.

12.2.3 To Drill a Hole in the Wall and Install a Sleeve of Piping

1. Make a Ø70 mm through hole.
2. Insert the piping sleeve to the hole.
3. Fix the bushing to the sleeve.
4. Cut the sleeve until it extrudes about 15 mm from the wall.

⚠ CAUTION
❗ When the wall is hollow, please be sure to use the sleeve for tube assembly to prevent dangers caused by mice biting the connection cable.

5. Finish by sealing the sleeve with putty or caulking compound at the final stage.

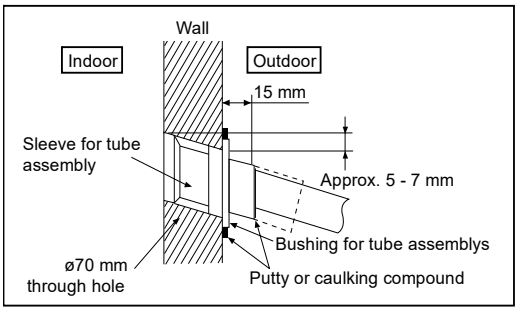

12.2.4 Indoor Unit Installation

12.2.4.1 Access to Internal Components

⚠ WARNING
This section is for authorized and licensed electrician/water system installer only. Work behind the front plate secured by screws must only be carried out under supervision of qualified contractor, installation engineer or service person.

Please follow the steps below for take out front plate. Before removing the front plate of Indoor Unit, always switch off all power supply (i.e. Indoor Unit power supply, heater power supply and Tank Unit power supply).

1. Remove the 2 mounting screws which located at bottom of the front plate.
2. Gently pull the lower section of the front plate towards you to remove the front plate from left and right hooks.
3. Hold the left edge and right edge of front plate to lift up front plate from hooks.

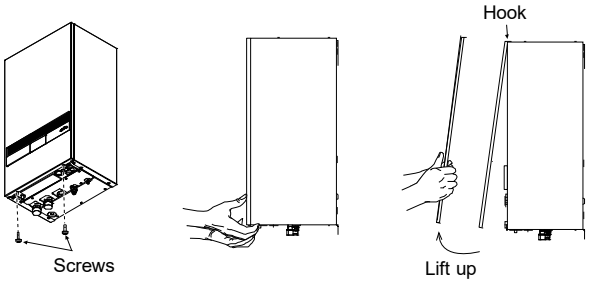

12.2.4.2 Install the Indoor Unit

1. Engage the slots on the Indoor Unit to the hooks of installation plate 1 . Ensure the hooks are properly seated on the installation plate by moving it left and right.
2. Fix the screws 5 to the holes on the hooks of installation plate 4 , as illustrated below.

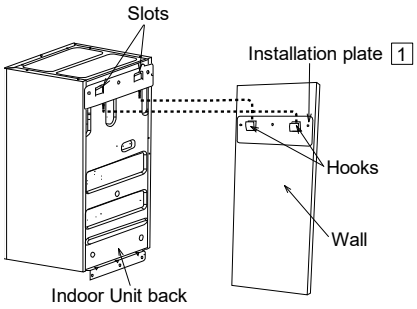

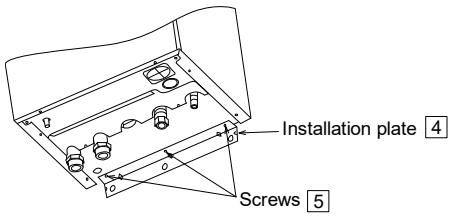

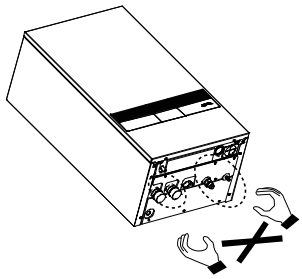

Note: Do not lift the Indoor Unit by holding the refrigerant and water pipes to prevent damage of the pipes.

12.2.4.3 Typical Piping Installation

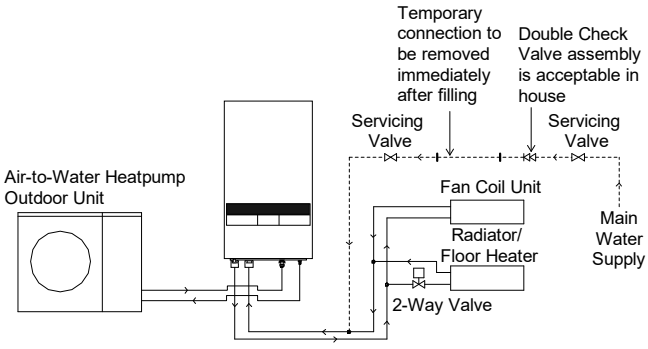

12.2.4.4 Water Piping Installation

- Water inlet and water outlet in Indoor Unit are used for connection to water circuit. Please request a licensed technician to install this water circuit.
- This water circuit must comply with all relevant European and national regulations, i.e. IEC/EN 61770.
- Do not use worn out tube or detachable hose-set.
- Be careful not to deform the piping to excessive force when doing piping connection job.
- Use Rp 1¼" nut for both water inlet and outlet connection and clean all pipings with tap water before connecting to the Indoor Unit.
- Cover the pipe end to prevent dirt and dust when inserting it through a wall.
- Choose proper sealer which can withstand the pressure and temperature of the system.
- If an existing tank is to be connected to this Indoor Unit, ensure the pipes are clean before water pipe installation is carried out.
- Be sure to use two spanners to tighten the connection. Tighten the nuts with torque wrench: 117.6N•m.

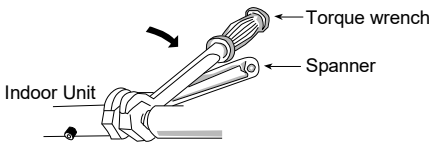

- If non-brass metallic piping is used for installation, make sure to insulate the pipes to prevent galvanic corrosion.
- Make sure to insulate the water circuit pipes to prevent reduction of heating capacity.
- After installation, check the water leakage condition in connection area during test run.

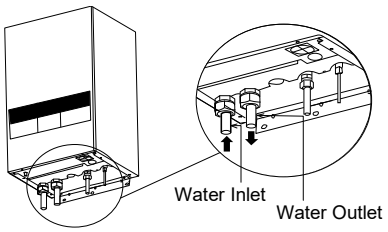

⚠ CAUTION
Do not over tighten, over tightening cause water leakage.

12.2.4.5 Refrigerant Piping Installation

1. Please make flare after inserting flare nut (located at joint portion of tube assembly) onto the copper pipe. (In case of using long piping)
2. Do not use pipe wrench to open refrigerant piping. Flare nut may be broken and cause leakage. Use proper spanner or ring wrench.
3. Connect the piping:
   - Align the center of piping and sufficiently tighten the flare nut with fingers.
   - Be sure to use two spanners to tighten the connection. Further tighten the flare nut with torque wrench in specified torque as stated in the table.

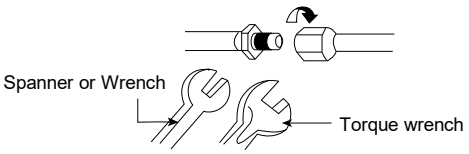

Model		Piping size (Torque)		Use Reducing Adapter 6
Indoor Unit	Outdoor Unit	Gas	Liquid	
WH-SDC0309K3E5, WH-SDC0309K6E5	WH-UDZ03KE5*	ø12.7mm (1/2") [55 N•m]	ø6.35mm (1/4") [18 N•m]	Yes
	WH-UDZ05KE5*, WH-UDZ07KE5*, WH-UDZ09KE5*	ø15.88mm (5/8") [65 N•m]	ø6.35mm (1/4") [18 N•m]	No
WH-SXC09K3E5, WH-SXC09K6E5, WH-SXC12K6E5	WH-UXZ09KE5*, WH-UXZ12KE5*	ø12.7mm (1/2") [55 N•m]	ø6.35mm (1/4") [18 N•m]	——

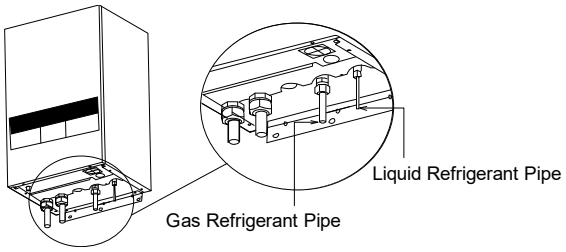

⚠ CAUTION
Do not overtighten, overtightening may cause gas leakage.
Do not pull and push refrigerant piping excessively, deformed pipe may cause refrigerant leak.
Please take extra precaution when open the control board cover ⑥ and control board ⑦ for Indoor Unit installation and servicing. Failure to do so may cause injury.

Additional Precautions For R32 Models when connecting by flaring at indoor side

❗	Ensure to do the re-flaring of pipes before connecting to units to avoid leaking.
❗	Connections made between components of refrigerant system shall be accessible for ease of maintenance.

Seal sufficiently the flare nut (both gas and liquid sides) with neutral cure (Alkoxy type) & ammonia-free silicone sealant and insulation material to avoid the gas leak caused by freezing.

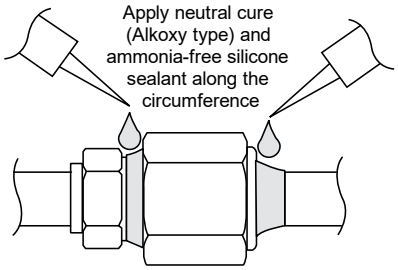

Neutral cure (Alkoxy type) & ammonia-free silicone sealant is only to be applied after pressure testing and cleaning up by following instructions of sealant, only to the outside of the connection. The aim is to prevent moisture from entering the connection joint and possible occurrence of freezing. Curing sealant will take some time. Make sure sealant will not peel off when wrapping the insulation.

12.2.4.6 Checking for Gas Leakage

- Check for leakage of gas after air purging.
- See the in the installation manual for the outdoor.

12.2.4.7 Cutting and Flaring the Piping

1. Please cut using pipe cutter and then remove the burrs.
2. Remove the burrs by using reamer. If burrs is not removed, gas leakage may be caused. Turn the piping end down to avoid the metal powder entering the pipe.
3. Please make flare after inserting the flare nut onto the copper pipes.

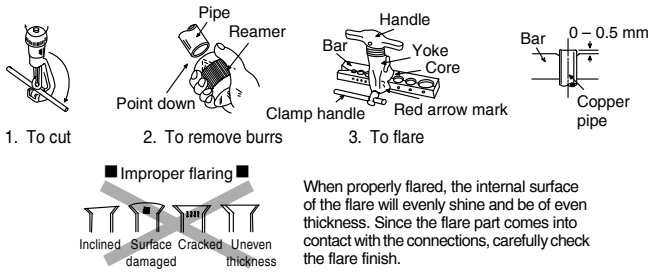

12.2.4.8 Drain Elbow and Hose Installation

- Fix the drain elbow 2 and packing 3 to the bottom of Indoor Unit, as shown in below illustration.
- Use inner diameter 17 mm drain hose in the market.
- This hose must to be installed in a continuosly downward direction and in a frost-free environment.
- Guides this hose's outlet to outdoor only.
- Do not insert this hose into sewage or drain pipe that may generate ammonia gas, sulfuric gas, etc.
- If necessary, use hose clamp to further tighten the hose at drain hose connector to prevent leakage.
- Water will drip from this hose, therefore the outlet of this hose must be installed in an area where the outlet cannot become blocked.

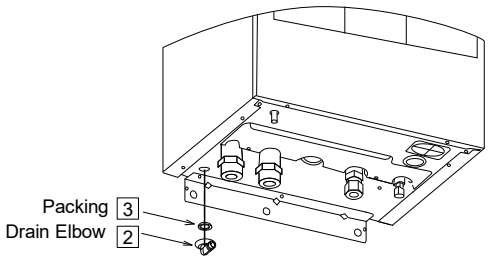

12.2.4.9 Pressure Relief Valve Drainage Pipework

- Connect a drain hose to the pressure relief valve hose outlet.
- This hose must to be installed in a continuosly downward direction and in a frost-free environment.
- Guides this hose's outlet to outdoor only.
- Do not insert this hose into sewage hose or cleaning hose that may generate ammonia gas, sulfuric gas, etc.
- If necessary, use hose clamp to further tighten the hose at drain hose connector to prevent leakage.
- Water will drip from this hose, therefore the outlet of this hose must be installed in an area where the outlet cannot become blocked.

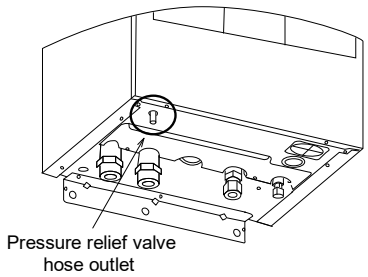

12.2.5 Connect the Cable to the Indoor Unit

⚠ WARNING
This section is for authorised and licensed electrician only. Work behind the Control Board Cover ⑥ secured by screws must only be carried out under supervision of qualified contractor, installation engineer or service person.

12.2.5.1 Open the Control Board Cover ⑥

Please follow the steps below to open control board cover. Before opening the control board cover of Indoor Unit, always switch off all power supply (i.e. Indoor Unit power supply, heater power supply and Tank Unit power supply).

1. Remove the 4 mounting screws at the control board cover.
2. Swing the control board cover to the right hand side.

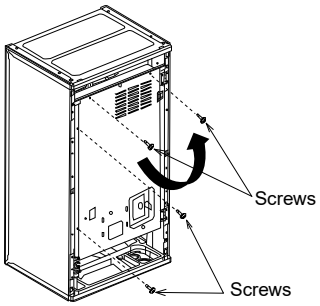

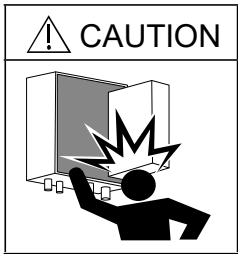

12.2.5.2 Fixing of Power Supply Cord and Connecting Cable

1. Connecting cable between Indoor Unit and Outdoor Unit shall be approved polychloroprene sheathed flexible cord, type designation 60245 IEC 57 or heavier cord.
   See below table for cable size requirement.

Model		Connecting Cable Size
Indoor Unit	Outdoor Unit	
WH-SDC0309K3E5, WH-SDC0309K6E5	WH-UDZ03KE5*, WH-UDZ05KE5*	4 x min 1.5 mm^2
	WH-UDZ07KE5*, WH-UDZ09KE5*	4 x min 2.5 mm^2
WH-SXC09K3E5, WH-SXC09K6E5, WH-SXC12K6E5	WH-UXZ09KE5*, WH-UXZ12KE5*	4 x min 4.0 mm^2

   - Ensure the colour of wires of Outdoor Unit and the terminal no. are the same to the Indoor Unit respectively.
   - Earth wire shall be longer than other wires as shown in the figure for the electrical safety in case of the slipping out of the cord from the Holder (Clamper).

2. An isolating device must be connected to the power supply cable.
   - Isolating device (disconnecting means) should have minimum 3.0 mm contact gap.
   - Connect the approved polychloroprene sheathed power supply 1 cord and power supply 2 cord and type designation 60245 IEC 57 or heavier cord to the terminal board, and to the other end of the cord to isolating device (Disconnecting means). See below table for cable size requirement.

Model		Power Supply Cord	Cable Size	Isolating Devices	Recommended RCD
Indoor Unit	Outdoor Unit				
WH-SDC0309K3E5	WH-UDZ03KE5*, WH-UDZ05KE5*	1	3 x min 1.5 mm^2	15/16A	30mA, 2P, type A
		2	3 x min 1.5 mm^2	15/16A	30mA, 2P, type AC
	WH-UDZ07KE5*, WH-UDZ09KE5*	1	3 x min 2.5 mm^2	25A	30mA, 2P, type A
		2	3 x min 1.5 mm^2	15/16A	30mA, 2P, type AC
WH-SDC0309K6E5	WH-UDZ03KE5*, WH-UDZ05KE5*	1	3 x min 1.5 mm^2	15/16A	30mA, 2P, type A
		2	3 x min 4.0 mm^2	30A	30mA, 2P, type AC
	WH-UDZ07KE5*, WH-UDZ09KE5*	1	3 x min 2.5 mm^2	25A	30mA, 2P, type A
		2	3 x min 4.0 mm^2	30A	30mA, 2P, type AC
WH-SXC09K3E5	WH-UXZ09KE5*	1	3 x min 4.0 mm^2	30A	30mA, 2P, type A
		2	3 x min 1.5 mm^2	15/16A	30mA, 2P, type AC
WH-SXC09K6E5, WH-SXC12K6E5	WH-UXZ09KE5*, WH-UXZ12KE5*	1	3 x min 4.0 mm^2	30A	30mA, 2P, type A
		2	3 x min 4.0 mm^2	30A	30mA, 2P, type AC

3. To avoid the cable and cord being damaged by sharp edges, the cable and cord must be passed through a bushing (located at the bottom of Control Board) before terminal board. The bushing must be used and must not be removed.

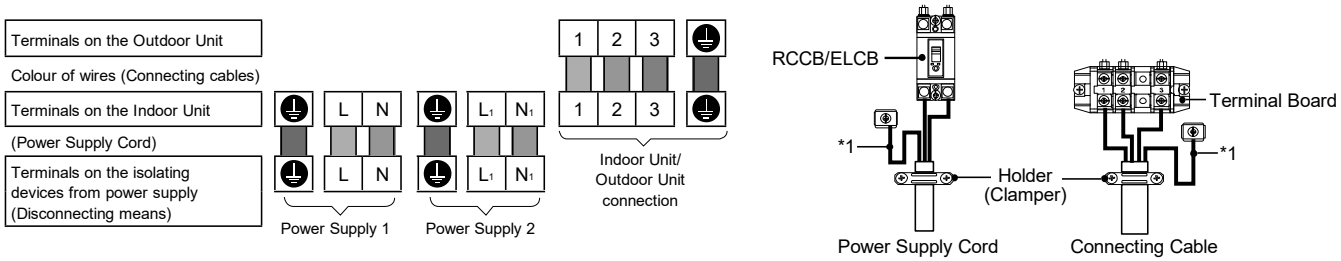

Terminal screw	Tightening torque cN•m {kgf•cm}
M4	157~196 {16~20}
M5	196~245 {20~25}

*1 - Earth wire must be longer than other cables for safety reasons

12.2.5.3 Wire Stripping and Connecting Requirement

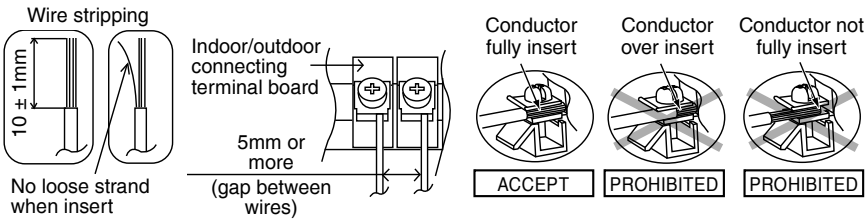

12.2.5.4 Connecting Requirement

For Indoor Unit WH-SDC0309K3E5 with WH-UDZ03KE5*, WH-UDZ05KE5*, WH-UDZ07KE5*, WH-UDZ09KE5*

- The equipment's Power Supply 1 complies with IEC/EN 61000-3-2.
- The equipment's Power Supply 1 complies with IEC/EN 61000-3-3 and can be connected to current supply network.
- The equipment's Power Supply 2 complies with IEC/EN 61000-3-2.
- The equipment's Power Supply 2 complies with IEC/EN 61000-3-3 and can be connected to current supply network.

For Indoor Unit WH-SDC0309K6E5 with WH-UDZ03KE5*, WH-UDZ05KE5*, WH-UDZ07KE5*, WH-UDZ09KE5*

- The equipment's Power Supply 1 complies with IEC/EN 61000-3-2.
- The equipment's Power Supply 1 complies with IEC/EN 61000-3-3 and can be connected to current supply network.
- The equipment's Power Supply 2 complies with IEC/EN 61000-3-12.
- The equipment's Power Supply 2 complies with IEC/EN 61000-3-11 and shall be connected to suitable supply network, with the following maximum permissible system impedance Z_{max} = 0.123 ohm (Ω) at the interface. Please liaise with supply authority to ensure that the Power Supply 2 is connected only to a supply of that impedance or less.

For Indoor Unit WH-SXC09K3E5 with WH-UXZ09KE5*

- The equipment's Power Supply 1 complies with IEC/EN 61000-3-12 provided that the short circuit power Ssc is greater than or equal to 4450kW at the intertace point between the user's supply and the public system. It is the responsibility of the installer or user of the equipment to ensure, by consultation with the distribution network operator if necessary, that the equipment is connected only to a supply with a short circuit power Ssc greater than or equal to 4450kW.
- The equipment's Power Supply 2 complies with IEC/EN 61000-3-2.
- The equipment's Power Supply 2 complies with IEC/EN 61000-3-3 and can be connected to current supply network.

For Indoor Unit WH-SXC09K6E5, WH-SXC12K6E5 with WH-UXZ09KE5*, WH-UXZ12KE5*

- The equipment's Power Supply 1 complies with IEC/EN 61000-3-12 provided that the short circuit power Ssc is greater than or equal to 4450kW at the intertace point between the user's supply and the public system. It is the responsibility of the installer or user of the equipment to ensure, by consultation with the distribution network operator if necessary, that the equipment is connected only to a supply with a short circuit power Ssc greater than or equal to 4450kW.
- The equipment's Power Supply 2 complies with IEC/EN 61000-3-12.
- The equipment's Power Supply 2 complies with IEC/EN 61000-3-11 and shall be connected to suitable supply network, with the following maximum permissible system impedance Z_{max} = 0.123 ohm (Ω) at the interface. Please liaise with supply authority to ensure that the Power Supply 2 is connected only to a supply of that impedance or less.

12.2.6 Installation of Remote Controller as Room Thermostat

- Remote Controller ③ mounted to the Indoor Unit can be moved to the room and serve as Room Thermostat.

12.2.6.1 Installation Location

- Install at the height of 1 to 1.5 m from the floor (Location where average room temperature can be detected).
- Install vertically against the wall.
- Avoid the following locations for installation.
  1. By the window, etc. exposed to direct sunlight or direct air.
  2. In the shadow or backside of objects deviated from the room airflow.
  3. Location where condensation occurs (The Remote Controller is not moisture proof or drip proof.)
  4. Location near heat source.
  5. Uneven surface.
- Keep distance of 1 m or more from the TV, radio and PC. (Cause of fuzzy image or noise)

12.2.6.2 Remote Controller Wiring

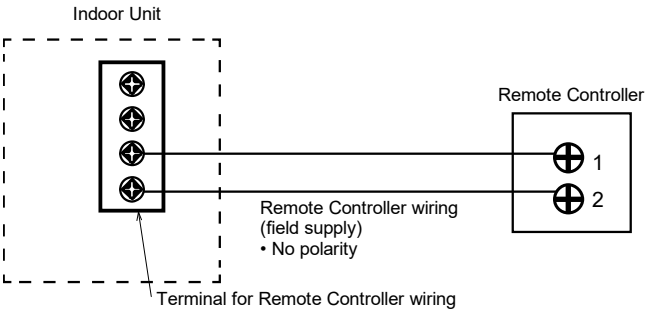

- Remote Controller cable shall be (2 x min 0.3 mm^2), of double insulation PVC-sheathed or rubber sheathed cable. Total cable length shall be 50 m or less.
- Be careful not to connect cables to other terminals of Indoor Unit (e.g. power source wiring terminal). Malfunction may occur.
- Do not bundle together with the power source wiring or store in the same metal tube. Operation error may occur.

12.2.6.3 Remove the Remote Controller from Indoor Unit

1. Remove both Left Decoration Panel ⑰ and Right Decoration Panel ⑱ from Front Plate ① with gently push the panels from back.

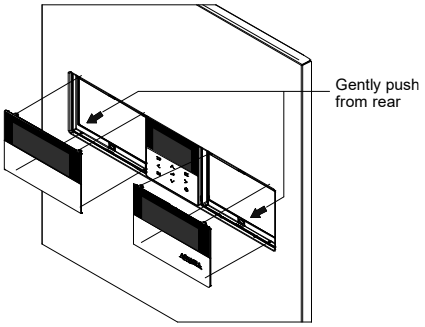

2. Remove the 4 screws and take out the holder with Remote Controller ③.

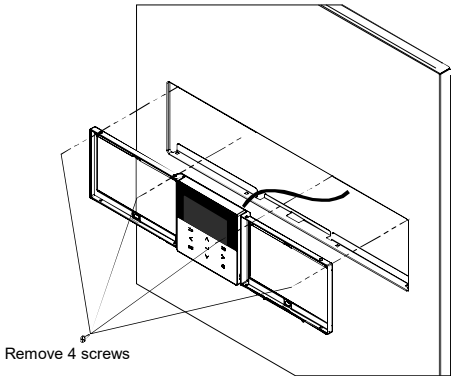

3. Remove the top case from the bottom case.

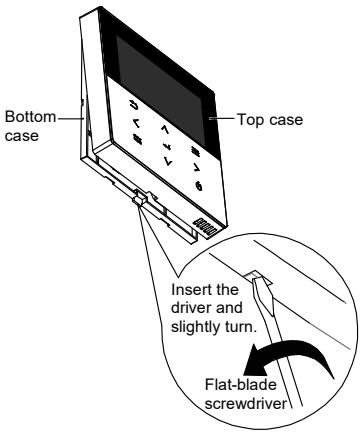

4. Remove the wiring between Remote controller ③ and Indoor Unit terminal.

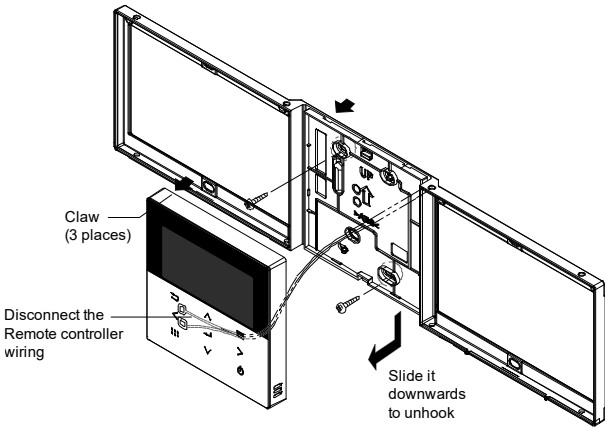

12.2.6.4 Mounting the Remote Controller

For exposed type

Preparation: Make 2 holes for screws using a driver.

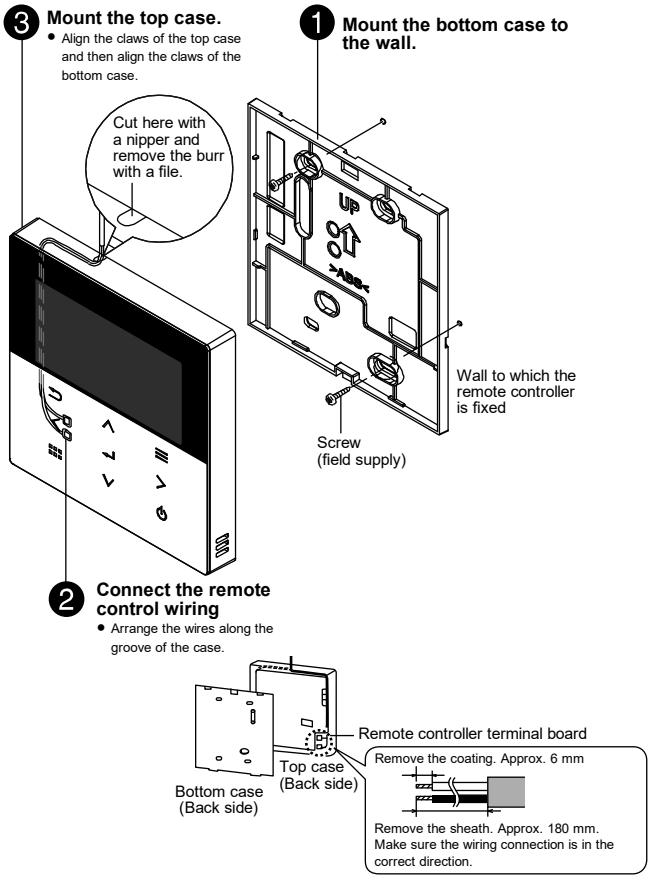

For embedded type
Preparation: Make 2 holes for screws using a driver.

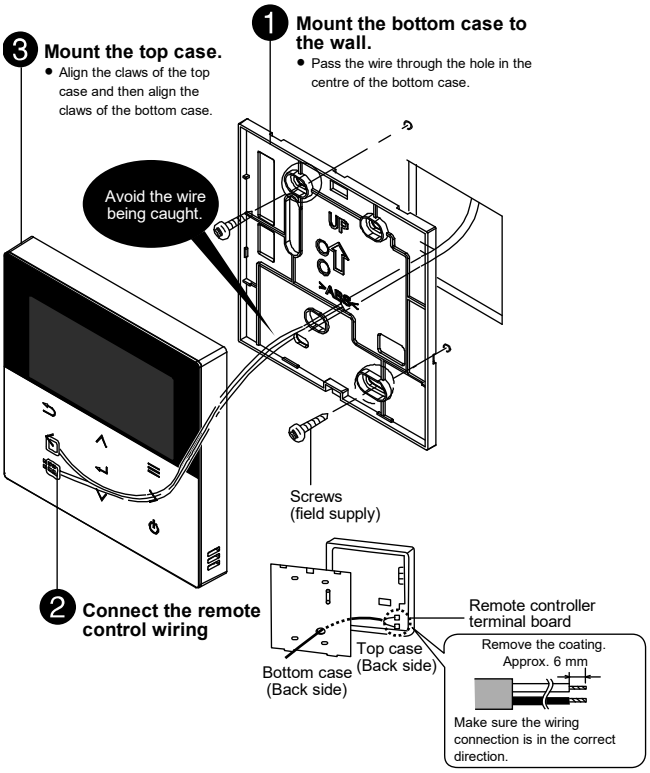

12.2.6.5 Replace the Remote Controller Cover

- Replace the existing Remote Controller with Remote Controller Case [7] to close the hole left after remove the Remote Controller.
  1. Refer Section “Remove The Remote Controller From Indoor Unit” for remove Remote Controller.
  2. Remove the top case from the bottom case of Remote Controller Case [7] .

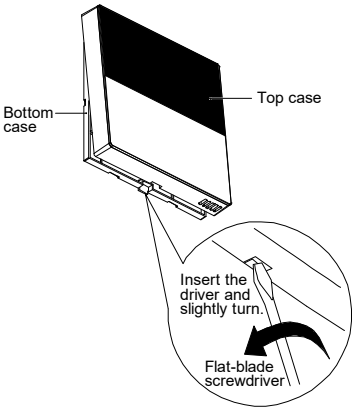

  3. Reverse the steps 1 to 4 of section “Remove The Remote Controller From Indoor Unit” to fix Remote Controller Case [7] on Indoor Unit.

12.2.7 Charging the Water

- Make sure all the piping installations are properly done before carry out below steps.
  1. Turn the plug on the Air Purge Valve ⑨ outlet anticlockwise by one complete turn from fully closed position.

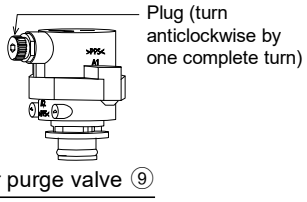

  2. Set the Pressure Relief Valve ⑬ lever “DOWN”.

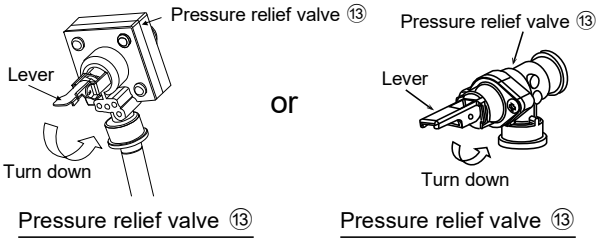

  3. Start filling water (with pressure more than 0.1 MPa (1 bar)) to the Indoor Unit via water inlet. Stop filling water if the free water flow through Pressure Relief Valve drain hose.
  4. Turn ON the power supply and make sure Water Pump ⑯ is running.
  5. Check and make sure no water leaking at the tube connecting points.
  6. The water may drip from this discharge hose. Therefore must guide the hose without close or block the outlet of the hose.

12.2.8 Reconfirmation

⚠ WARNING
Be sure to switch off all power supply before performing each of the below checkings. Before obtaining access to terminals, all supply circuits must be disconnected.

12.2.8.1 Check Pressure Relief Valve ⑬

- Check for correct operation of Pressure Relief Valve ⑬ by turning on the lever to become horizontal.
- If you do not hear a clacking sound (due to water drainage), contact your local authorized dealer.
- Push down the lever after finish checking.
- In case the water keeps drained out from the unit, switch off the system, and then contact your local authorized dealer.

12.2.8.2 Expansion Vessel ⑫ Pre Pressure Checking

[Upper limit water volume of the system]
The Indoor Unit has a build-in Expansion Vessel with 10 L air capacity and initial pressure of 1 bar.
Total amount of water in the system should be below 200 L.
If the total amount of water is more than 200 L, please add expansion vessel (field supply).
The expansion vessel capacity required for the system can be calculated from the formula below.

$$V = \frac{\varepsilon \times Vo}{1 - \frac{98 + P_1}{98 + P_2}}$$

V : Required gas volume <expansion vessel volume L>
Vo : System total water volume <L>
ε : Water expansion rate 5 → 60˚C = 0.0171
P_1 : Expansion tank filling pressure = (100) kPa
P_2 : System maximum pressure = 300 kPa

- ( ) Please confirm at actual place
- The gas volume of the sealed type expansion vessel is presented by <V>.

O It's advised to add 10% margin for required gas volume of calculation.

Water expansion rate table

Water temperature (°C)	Water expansion rate ε
10	0.0003
20	0.0019
30	0.0044
40	0.0078
50	0.0121
60	0.0171
70	0.0228
80	0.0291
90	0.0360

[Adjustment of the initial pressure of the expansion vessel when there is a difference in installation height]
If the height difference between the Indoor Unit and the highest point of the system water circuit (H) is more than 7m, please adjust the initial pressure of the expansion vessel (Pg) according to the following formula.

Pg= (H*10+30) kPa

12.2.8.3 Check RCCB/ELCB

Ensure the RCCB/ELCB set to "ON" condition before check RCCB/ELCB.
Turn on the power supply to the Indoor Unit.
This testing could only be done when power is supplied to the Indoor Unit.

⚠ WARNING

Be careful not to touch parts other than RCCB/ELCB test button when the power is supplied to Indoor Unit. Else, electrical shock may happen. Before obtaining access to terminals, all supply circuits must be disconnected.

- Push the "TEST" button on the RCCB/ELCB. The lever would turn down and indicate "0", if it functions normal.
- Contact authorized dealer if the RCCB/ELCB malfunction.
- Turn off the power supply to the Indoor Unit.
- If RCCB/ELCB functions normal, set the lever to "ON" again after testing finish.

12.2.9 Test Run

1. Fill up the Tank Unit with water. For details refer to Tank Unit installation instruction and operation instruction.
2. Set ON to the Indoor Unit and RCCB/ELCB. Then, for control panel operation please refers to air-to-water heatpump operation instruction.

Note:
- During winter, turn on the power supply and standby the unit for at least 15 minutes before test run.
  Allow sufficient time to warm up refrigerant and prevent wrong error code judgement.

3. For normal operation, pressure sensor ⑭ reading should be in between 0.05 MPa and 0.3 MPa (0.5 bar and 3 bar).
4. After test run, please clean the Magnetic Water Filter Set ⑮. Reinstall it after finish cleaning.

12.2.9.1 Reset Overload Protector ⑪

Overload Protector ⑪ serves the safety purpose to prevent the water over heating. When the Overload Protector ⑪ trip at high water temperature, take below steps to reset it.
1. Take out the cover.
2. Use a test pen to push the centre button gently in order to reset the Overload Protector ⑪.
3. Fix the cover to the original fixing condition.

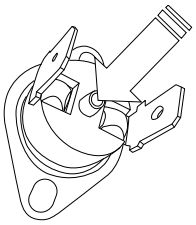

Use test pen to push this button for reset Overload protector ⑪.

12.2.10 Maintenance

- In order to ensure safety and optimal performance of the unit, seasonal inspections on the unit, functional check of RCCB/ELCB, field wiring and piping have to be carried out at regular intervals. This maintenance should be carried out by authorized dealer. Contact dealer for scheduled inspection.

12.2.10.1 Maintenance for Magnetic Water Filter Set ⑮

1. Turn OFF power supply.
2. Place a container below Magnetic Water Filter Set ⑮.
3. Turn to remove the Magnet Bar at bottom of Magnetic Water Filter Set ⑮.
4. By using Allen key (8mm), remove the Cap of Discharge Port.
5. By using Allen Key (4mm), open the Service Valve to release the dirty water from the Discharge Port into a container. Close the service valve when the container is full to avoid spillage in the tank unit. Dispose the dirty water.
6. Reinstall the Cap of Discharge Port and Magnet Bar.
7. Re-charging the water to Space Heating / Cooling circuit if necessary (refer Section 11.2.5 for details.)
8. Turn ON power supply.

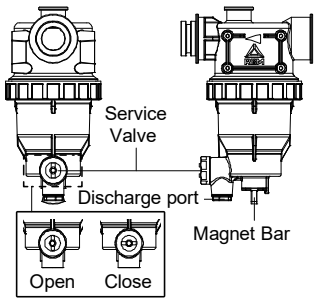

12.2.10.2 Proper Pump Down Procedure

⚠ WARNING
Strictly follow the steps below for proper pump down procedure. Explosion may occur if the steps are not followed as per sequence. 1. When the Indoor Unit is not in operation (standby), enter the Service setup menu in the Remote Controller and select Pump down operation to turn it ON. (See APPENDIX for detail) 2. After 10~15 minutes, (after 1 or 2 minutes in case very low ambient temperature (< 10°C)), fully close 2 way valve on Outdoor Unit. 3. After 3 minutes, fully close 3 way valve on Outdoor Unit. 4. Press the “OFF/ON” switch on the Remote Controller ③ to stop pump down operation. 5. Remove the refrigerant piping.

12.3 Outdoor Unit

Attached accessories

No.	Accessories part	Qty.
1	Drain elbow	1
2	Rubber cap	8
3	Protective bushing	2

Optional Accessory

No.	Accessories part	Qty.
4	Base Pan Heater CZ-NE3P	1

- It is strongly recommended to install a Base Pan Heater (optional) if the outdoor unit is install in cold climate area. Refer the Base Pan Heater (optional) installation instruction for details of installation.

12.3.1 Select the Best Location

- If an awning is built over the unit to prevent direct sunlight or rain, be careful that heat radiation from the condenser is not obstructed.
- Avoid installations in areas where the ambient temperature may drop below -28°C.
- Keep the spaces indicated by arrows from wall, ceiling, fence or other obstacles.
- Do not place any obstacles which may cause a short circuit of the discharged air.
- If outdoor unit installed near sea, region with high content of sulphur or oily location (e.g. machinery oil, etc.), it lifespan maybe shorten.
- When installing the product in a place where it will be affected by typhoon or strong wind such as wind blowing between buildings, including the rooftop of a building and a place where there is no building in surroundings, fix the product with an overturn prevention wire, etc. (Overturn prevention fitting model number: K-KYZP15C)

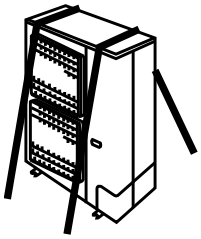

- If piping length is over 10 m, additional refrigerant should be added as shown in the table.

Model	Piping size		Rated Length (m)		Max. Elevation (m)	Min. Piping Length (m)	Max. Piping Length (m)	Additional Refrigerant (g/m)
	Gas	Liquid	For Heat Pump Indoor Unit	For Hydromodule + Tank				
WH-UXZ09KE5*, WH-UXZ12KE5*	ø12.7mm (1/2")	Ø6.35mm (1/4")	7	7	20	3	30	30

Example: For WH-UXZ09KE5*
If piping length is 30m, the quantity of additional refrigerant should be 600g. [(30-10)m × 30 g/m = 600g]

12.3.2 Install the Outdoor Unit

12.3.2.1 Installation Diagram

- It is advisable to avoid more than 2 blockage directions. For better ventilation & multiple-outdoor installation, please consult authorized dealer/specialist.
- This illustration is for explanation purposes only.

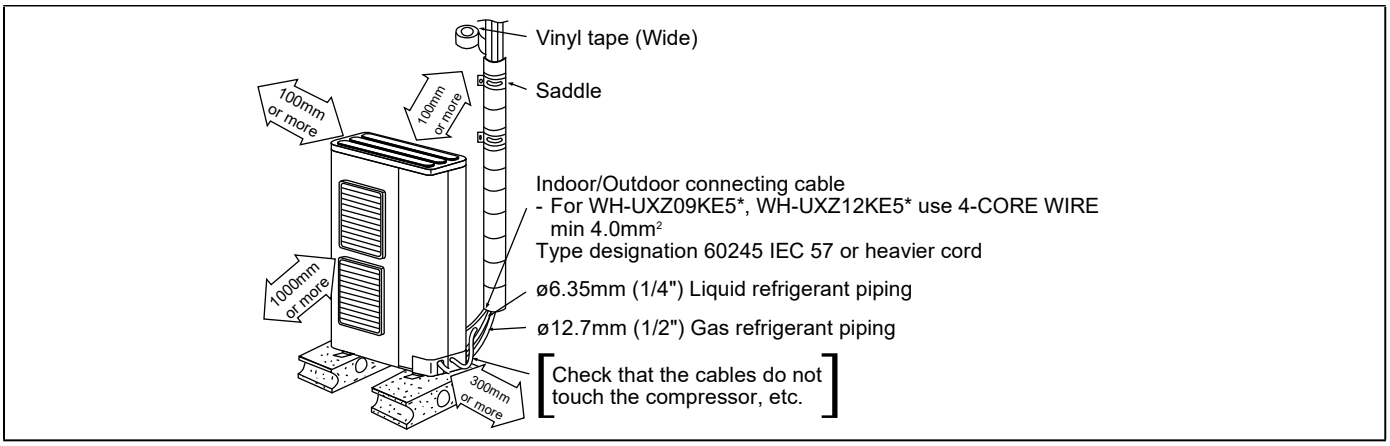

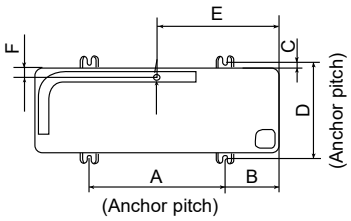

Model	A	B	C	D	E	F
WH-UXZ09KE5*, WH-UXZ12KE5*	620	140	15	355	450	44

(Unit : mm)

- After selecting the best location, start installation according to Installation Diagram.
  1 Fix the unit on concrete or rigid frame firmly and horizontally by bolt nut (ø10 mm).
  2 When installing at roof, please consider strong wind and earthquake. Please fasten the installation stand firmly with bolt or nails.

12.3.2.2 Disposal of Outdoor Unit Drain Water

- When a Drain elbow 1 is used, please ensure to follow below:
  - the unit should be placed on a stand which is taller than 50 mm.
  - cover the ø20mm holes with Rubber cap 2 (refer to illustration below).
  - use a tray (field supply) when necessary to dispose the outdoor unit drain water.
- If the unit is used in an area where temperature falls below 0°C for 2 or 3 consecutive days, it is recommended not to use the Drain elbow 1 and Rubber cap 2 , for the drain water freezes and the fan will not rotate.

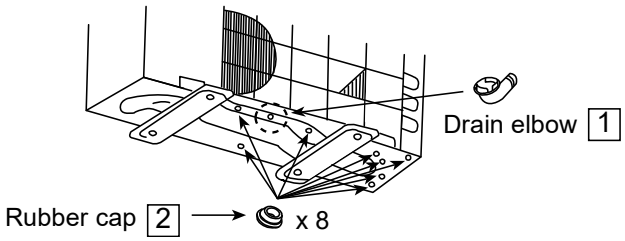

12.3.3 Connecting the Piping

⚠ CAUTION
Do not over tighten, over tightening may cause gas leakage.

Model	Piping size (Torque)	
	Gas	Liquid
WH-UXZ09KE5*, WH-UXZ12KE5*	ø12.7mm (1/2") [55 N•m]	ø6.35mm (1/4") [18 N•m]

12.3.3.1 Connecting the Piping to Outdoor Unit

Decide piping length and then cut by using pipe cutter. Remove burrs from cut edge. Make flare after inserting the flare nut (locate at valve) onto the copper pipe. Align center of piping to valves and then tighten with torque wrench to the specified torque as stated in the table.

Local pipes can project in any of four directions.

- Make holes in the pipe panels for the pipes to pass through.
- Be sure to install the pipe panels to prevent rain from getting inside the outdoor unit.
  [Removing the service panel].
  (1) Remove the three mounting screws.
  (2) Slide the service panel downward to release the pawls.

After this, pull the service panel towards you to remove it.

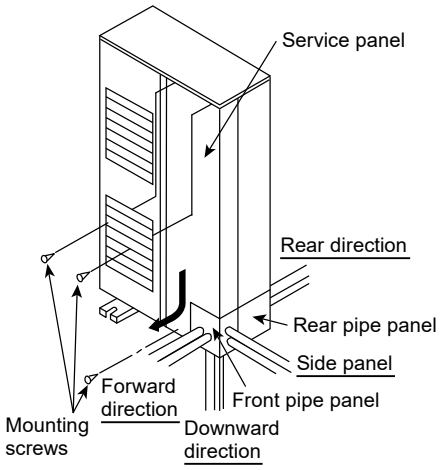

Close the tube joining area with putty heat insulator (local supply) without any gap as shown in right figure. (To prevent insects or small animal entering.)

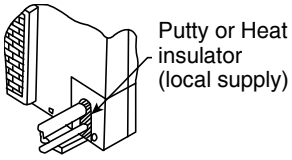

12.3.3.1.1 Cutting and Flaring the Piping

1 Please cut using pipe cutter and then remove the burrs.
2 Remove the burrs by using reamer. If burrs is not removed, gas leakage may be caused. Turn the piping end down to avoid the metal powder entering the pipe.
3 Please make flare after inserting the flare nut onto the copper pipes.

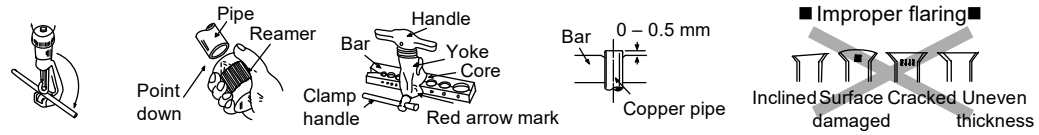

1. To cut 2. To remove burrs 3. To flare

When properly flared, the internal surface of the flare will evenly shine and be of even thickness. Since the flare part comes into contact with the connections, carefully check the flare finish.

12.3.4 Air Tightness Test on the Refrigerating System

⊘	Do not purge the air with refrigerants but use a vacuum pump to vacuum the installation.
!	There is no extra refrigerant in the outdoor unit for air purging.

- Before system is charged with refrigerant and before the refrigerating system is put into operation, below site test procedure and acceptance criteria shall be vertified by the certified technicians, and/or the installer.
- Be sure to check whole system for gas leakage.

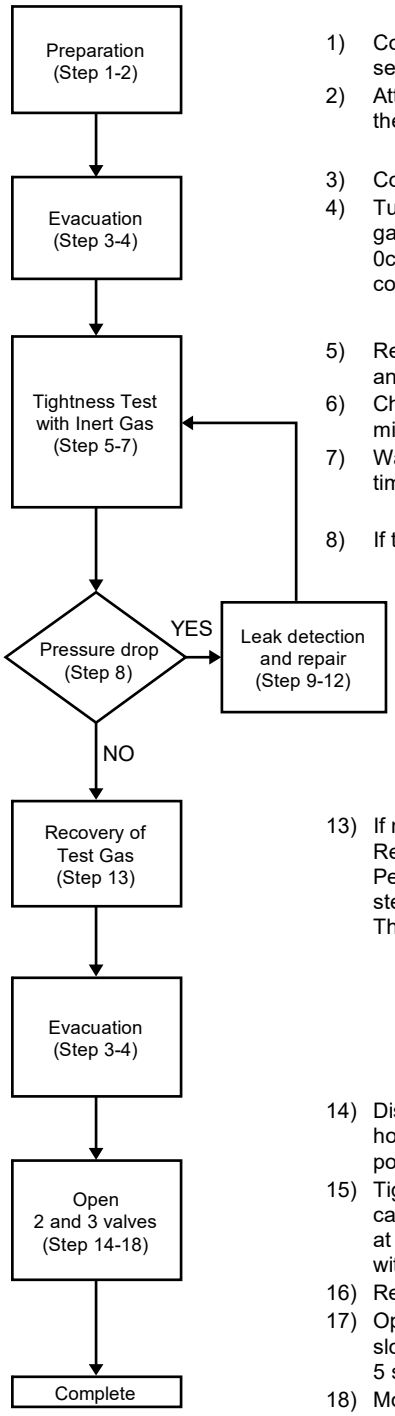

1) Connect a charging hose with a push pin to the Low side of a charging set and the service port of the 3-way valve.
2) Attach the gauge manifold set correctly and tightly. Make sure that both valves of the manifold gauge (low pressure and high pressure) is in close position.

3) Connect the center hose of the manifold gauge to a vacuum pump.
4) Turn on the power switch of the vacuum pump, then turn open the low side manifold gauge valve and make sure that the needle in the gauge moves from 0cmHg (0 MPa) to –76 cmHg (–0.1 MPa) or vacuum until 500 microns is achieved. This process continues for approximately ten minutes. Then close the low side manifold gauge valve.

5) Remove the vacuum pump from the centre hose and connect the center hose to cylinder of any applicable inert gas as test gas.
6) Charge test gas into the system and wait until the pressure within the system to reach min. 1.04MPa (10.4barg).
7) Wait and monitor the pressure reading on the gauges. Check if there is any pressure drop. Waiting time depends on the size of the system.

8) If there is any pressure drop, perform step 9-12. If there is no pressure drop, perform step 13.

9) Use Gas Leak Detector to check for leaks. Must use the detection equipment with a sensitivity of 5 grams per year of test gas or better.
10) Move the probe along the Air-to-Water Heatpump system to check for leaks, and mark for repair.
11) Any leak detected and marked shall be repaired.
12) After repair, repeat evacuation steps 3-4 and tightness test steps 5-7. Check the pressure drop as in step 8.

13) If no leak, Recover the test gas. Perform evacuation of steps 3-4. Then proceed to step 14.

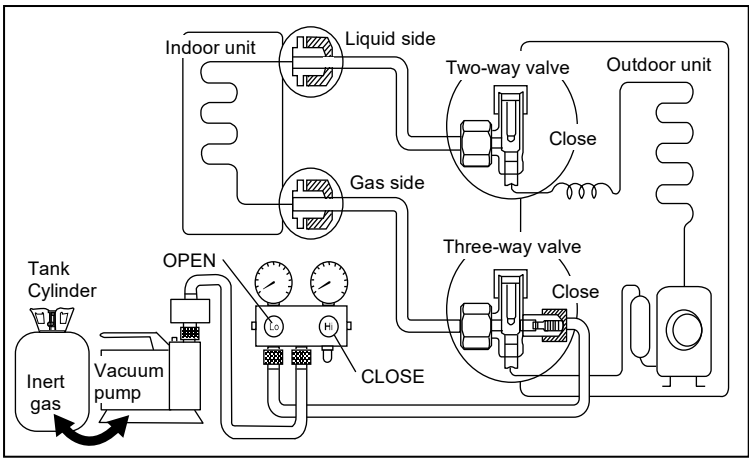

14) Disconnect the charging hose from the service port of the 3-way valve.
15) Tighten the service port caps of the 3-way valve at a torque of 18 N•m with a torque wrench.
16) Remove the valve caps of both of the 2-way valve and 3-way valve.
17) Open both of the valves, using a hexagonal wrench (4mm). It is recommended to allow refrigerant slowly flow into the refrigerant system to prevent refrigerant freezing. Slightly open 2-way valve for 5 seconds then close the valve. Repeat this action for 3 cycles then fully open the valve.
18) Mount back the valve caps onto the 2-way valve and the 3-way valve to complete this process.

Notes:

Recommended use of any of the following leak detector,

I) Universal Sniffer leak detector
II) Electronic halogen leak detector
III) Ultrasonic Leak Detector

12.3.5 Connect the Cable to the Outdoor Unit

(FOR DETAIL REFER TO WIRING DIAGRAM AT UNIT)

1 Remove the control board cover from the unit by loosening the screw.
2 Connecting cable between indoor unit and outdoor unit shall be approved polychloroprene sheathed flexible cable (see below table), type designation 60245 IEC 57 or heavier cable.
3 Secure the cable onto the control board with the holder (clamper).
4 Attach the control board cover back to the original position with screw.

⚠ WARNING
⏚ This equipment must be properly earthed.

Models	Flexible cable specification
WH-UXZ09KE5*, WH-UXZ12KE5*	4 × min 4.0 mm^2

Terminals on the indoor unit	1	2	3	⏚
Colour of wires				
Terminals on the outdoor unit	1	2	3	⏚

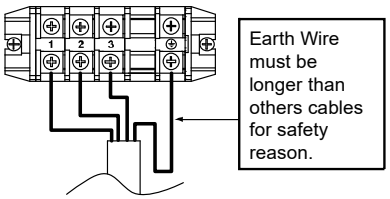

- Select required direction and apply protective bushing provided in accessories to protect cables from sharp edges.
- Once all wiring work has been completed, tie the cable and cord together with the binding strap so that they do not touch other parts such as the compressor and bare copper pipes.

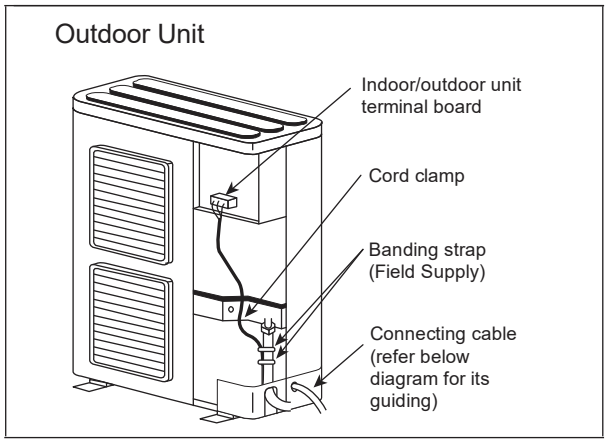

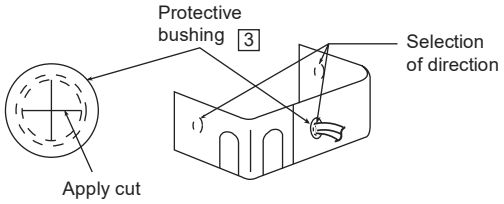

DETAIL OF CONNECTING CABLE GUIDING

12.3.5.1 Wire Stripping and Connecting Requirement

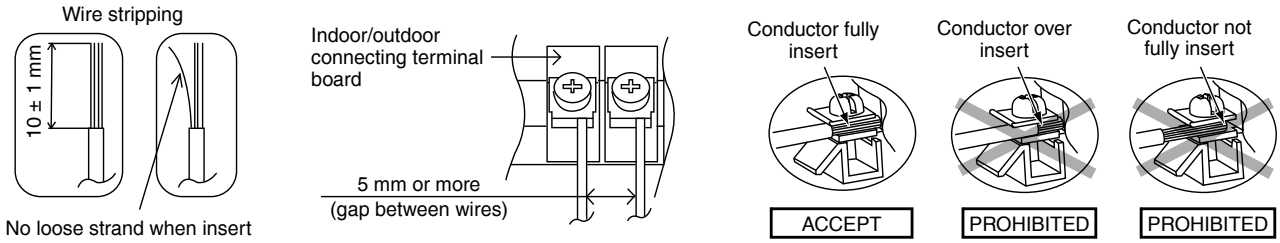

12.3.6 Pipe Insulation

1 Please carry out insulation at pipe connection portion as mentioned in Indoor/Outdoor Unit Installation Diagram. Please wrap the insulated piping end to prevent water from going inside the piping.
2 If drain hose or connecting piping is in the room (where dew may form), please increase the insulation by using POLY-E FOAM with thickness 6 mm or above.

⚠ CAUTION
If cleaning of the outdoor unit is necessary during installation or servicing, do not clean the outdoor unit with any hydrocarbon based solvent.

12.4 Appendix

12.4.1 Variation of System

This section introduces variation of various systems using Air-To-Water Heatpump and actual setting method.

12.4.1.1 Introduce Application Related to Temperature Setting

12.4.1.1.1 Temperature Setting Variation for Heating

1. Remote Controller

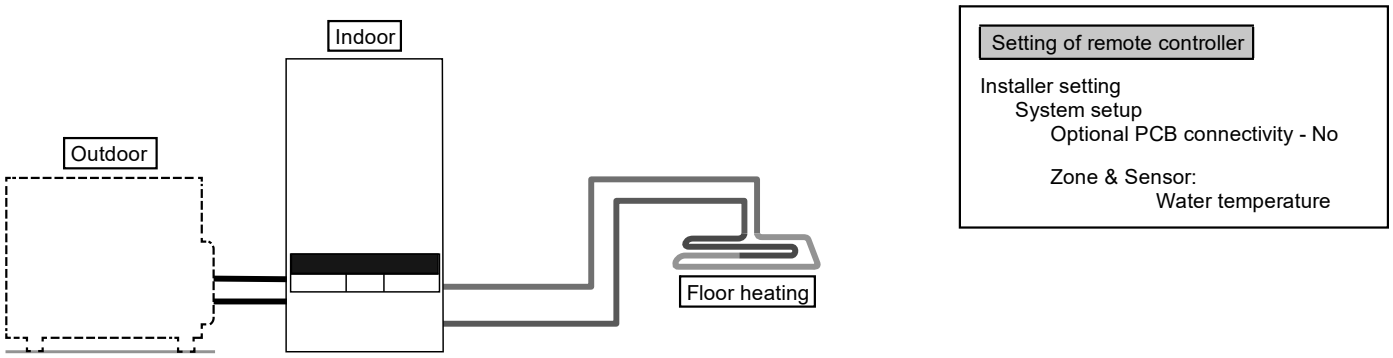

Connect floor heating or radiator directly to the Indoor Unit.
Remote controller is installed on Indoor Unit.
This is the basic form of the most simple system.

2. Room Thermostat

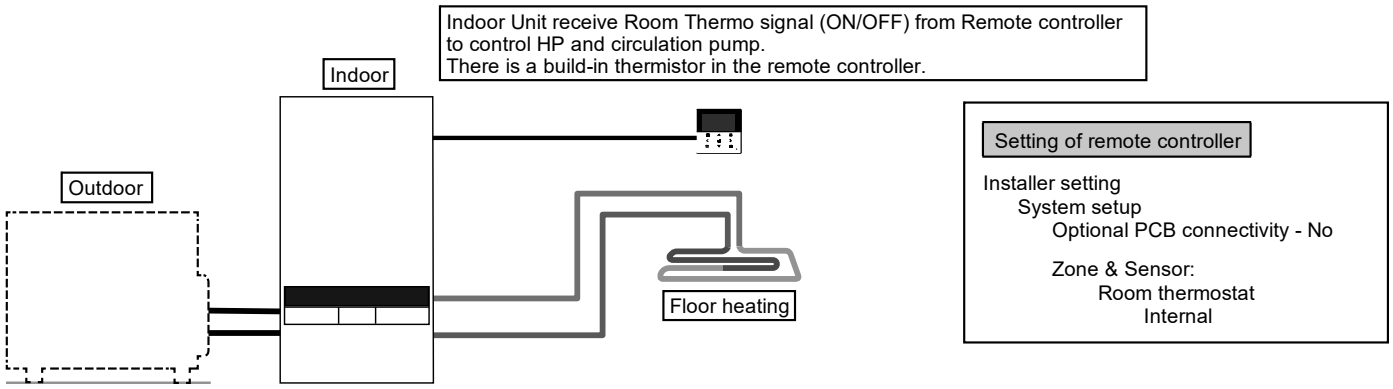

Connect floor heating or radiator directly to the Indoor Unit.
Remove remote controller from Indoor Unit and install it in the room where floor heating is installed.
This is an application that uses remote controller as Room Thermostat.

3. External Room Thermostat

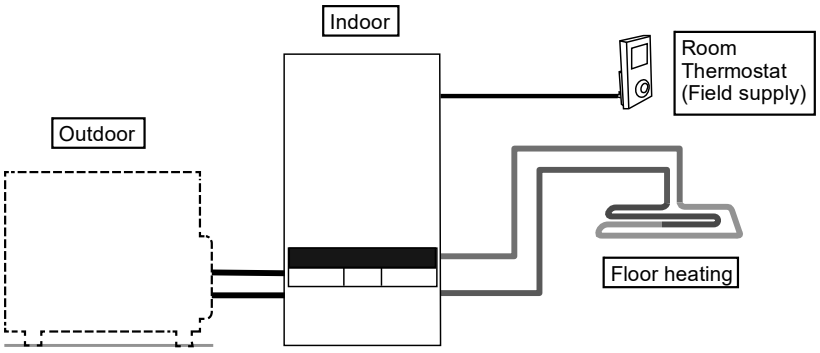

Setting of remote controller

Installer setting
System setup
Optional PCB connectivity - No

Zone & Sensor:
Room thermostat
(External)

Connect floor heating or radiator directly to Indoor Unit.
Remote controller is installed on Indoor Unit.
Install separate external Room Thermostat (field supply) in the room where floor heating is installed.
This is an application that uses external Room Thermostat.

4. Room Thermistor

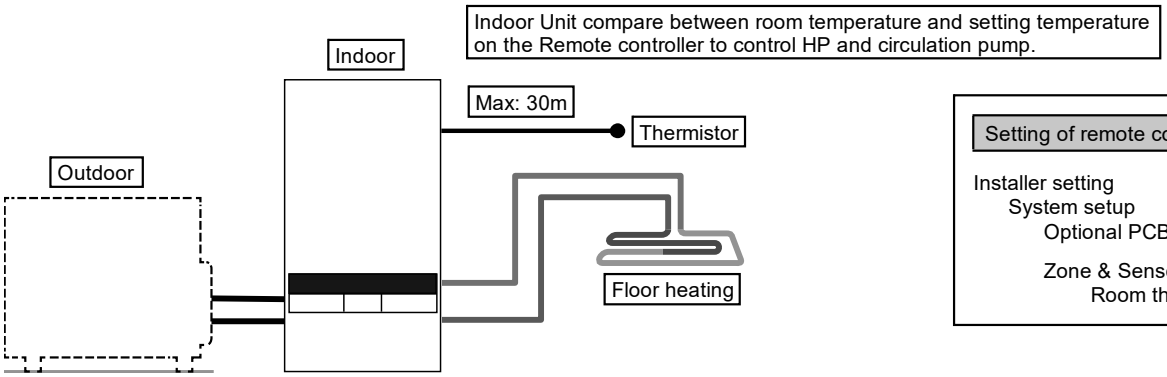

Setting of remote controller

Installer setting
System setup
Optional PCB connectivity - No

Zone & Sensor:
Room thermistor

Connect floor heating or radiator directly to Indoor Unit.
Remote controller is installed on Indoor Unit.
Install separate external room thermistor (specified by Panasonic) in the room where floor heating is installed.
This is an application that uses external room thermistor.

There are 2 kinds of circulation water temperature setting method.
Direct: set direct circulation water temperature (fixed value)
Compensation curve: set circulation water temperature depends on outdoor ambient temperature
In case of Room thermo or Room thermistor, compensation curve can be set.
In this case, compensation curve is shifted according to the thermo ON/OFF situation.

- (Example) If room temperature increasing speed is;
  very slow → shift up the compensation curve
  very fast → shift down the compensation curve

12.4.1.1.2 Examples of Installations

Floor heating 1 + Floor heating 2

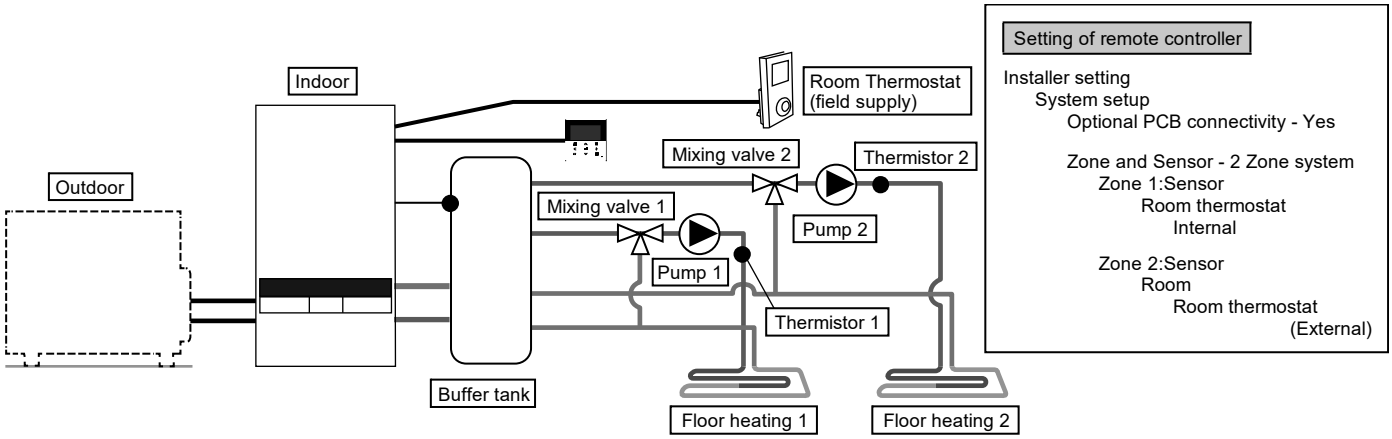

Connect floor heating to 2 circuits through buffer tank as shown in the figure.
Install mixing valves, pumps and thermistors (specified by Panasonic) on both circuits.
Remove remote controller from Indoor Unit, install it in one of the circuit and use it as Room Thermostat.
Install external Room Thermostat (field supply) in another circuit.
Both circuits can set circulation water temperature independently.
Install buffer tank thermistor on buffer tank.
It requires connection setting of buffer tank and ΔT temperature setting at heating operation separately.
This system requires Optional PCB (CZ-NS5P).

NOTE : Buffer tank thermistor must be connected to main indoor PCB only.

Floor heating + Radiator

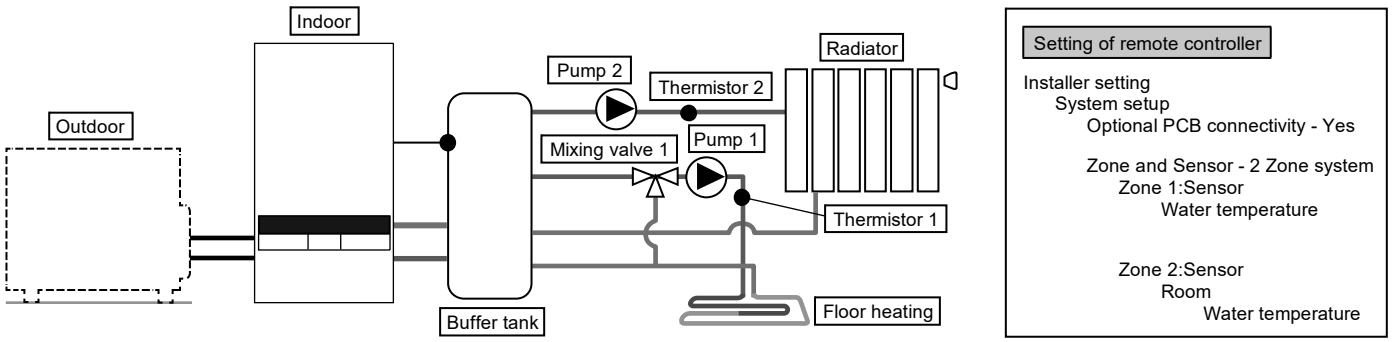

Connect floor heating or radiator to 2 circuits through buffer tank as shown in figure.
Install pumps and thermistors (specified by Panasonic) on both circuits.
Install mixing valve in the circuit with lower temperature among the 2 circuits.
(Generally, if install floor heating and radiator circuit at 2 zones, install mixing valve in floor heating circuit.)
Remote controller is installed on Indoor Unit.
For temperature setting, select circulation water temperature for both circuits.
Both circuits can set circulation water temperature independently.
Install buffer tank thermistor on buffer tank.
It requires connection setting of buffer tank and ΔT temperature setting at heating operation separately.
This system requires the Optional PCB (CZ-NS5P).
Mind that if there is no mixing valve at the secondary side, the circulation water temperature may get higher than setting temperature.

NOTE : Buffer tank thermistor must be connected to main indoor PCB only.

Floor heating + Swimming pool

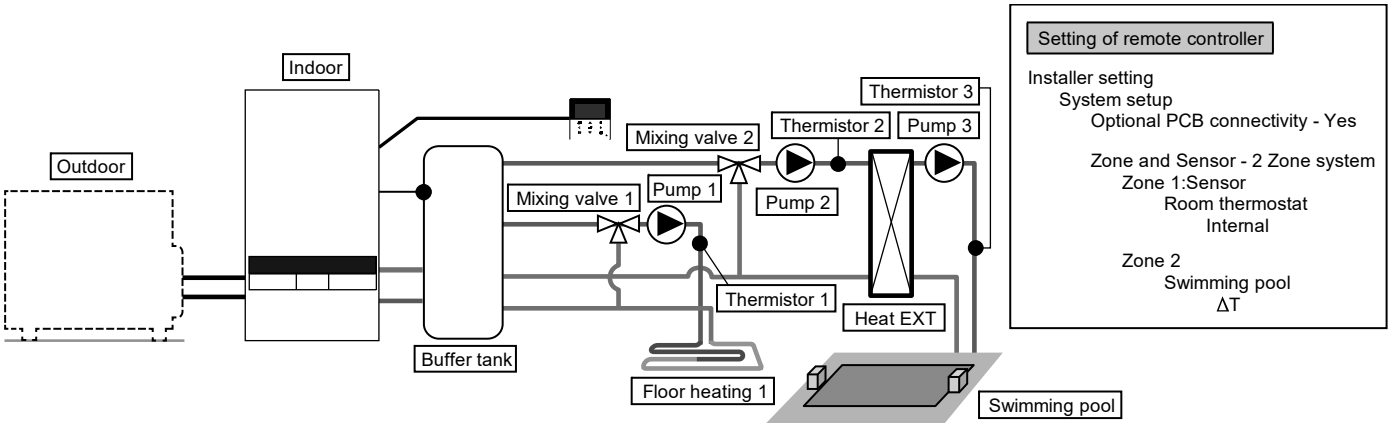

Connect floor heating and swimming pool to 2 circuits through buffer tank as shown in figure.
Install mixing valves, pumps and thermistors (specified by Panasonic) on both circuits.
Then, install additional pool heat exchanger, pool pump and pool sensor on pool circuit.
Remove remote controller from Indoor Unit and install in room where floor heating is installed. Circulation water temperature of floor heating and swimming pool can be set independently.
Install buffer tank sensor on buffer tank.
It requires connection setting of buffer tank and ΔT temperature setting at heating operation separately. This system requires the Optional PCB (CZ-NS5P).

❈ Must connect swimming pool to “Zone 2”.
If it is connected to swimming pool, operation of pool will stop when “Cooling” is operated.

Note : Buffer tank thermistor must be connected to main indoor PCB only.

Swimming pool only

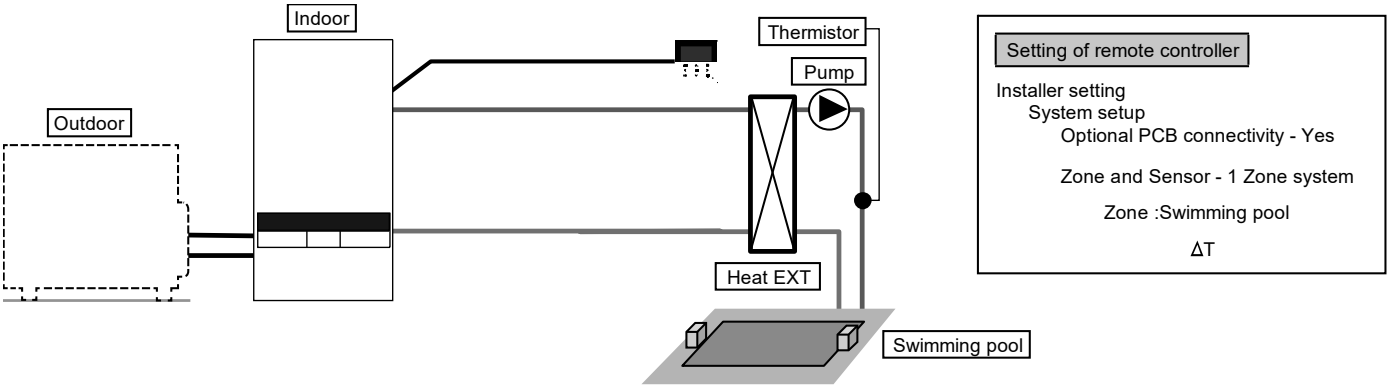

This is an application that connects to the swimming pool only.
Connects pool heat exchanger directly to Indoor Unit without using buffer tank.
Install pool pump and pool sensor (specified by Panasonic) at secondary side of the pool heat exchanger.
Remove remote controller from Indoor Unit and install in room where floor heating is installed.
Temperature of swimming pool can be set independently.
This system requires the Optional PCB (CZ-NS5P).

In this application, cooling mode cannot be selected. (not display on remote controller)

Simple 2 zone (Floor heating + Radiator)

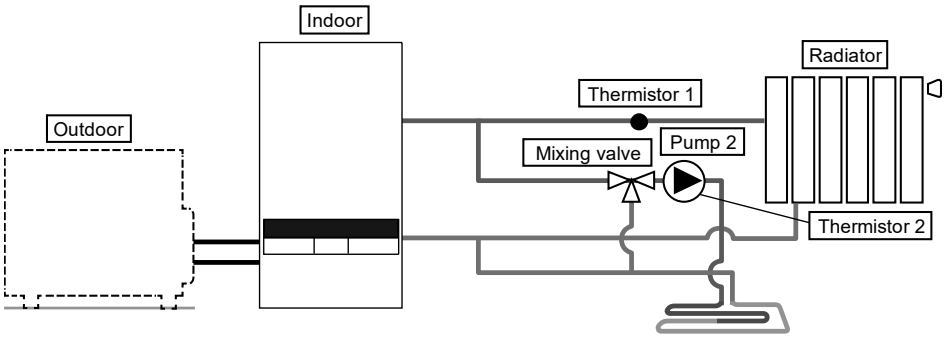

Setting of remote controller

Installer setting
System setup
Optional PCB connectivity - Yes

Zone and Sensor - 2 Zone system
Zone 1:Sensor
Water temperature

Zone 2:Sensor
Room
Water temperature

Operation setup
Heat
ΔT for heating ON – 1°C

Cool
ΔT for cooling ON – 1°C

This is an example of simple 2 zone control without using buffer tank.
Built-in pump from Indoor Unit served as a pump in zone 1.
Install mixing valve, pump and thermistor (specified by Panasonic) on zone 2 circuit.
Please be sure to assign high temperature side to zone 1 as temperature of zone 1 cannot be adjusted.
Zone 1 thermistor is required to display temperature of zone 1 on remote controller.
Circulation water temperature of both circuits can be set independently.
(However, temperature of high temperature side and low temperature side cannot be reversed)
This system requires the Optional PCB (CZ-NS5P).

(NOTE)
- Thermistor 1 does not affect operation directly. But error happens if it is not installed.
- Please adjust flow rate of zone 1 and zone 2 to be in balance. If it is not adjusted correctly, it may affects the performance.
  (If zone 2 pump flow rate is too high, there is possibility that no hot water flowing to zone 1.)
  Flow rate can be confirmed by “Actuator Check” from maintenance menu.

12.4.1.1.3 Introduce Applications of System that Uses Optional Equipment

DHW (Domestic Hot Water) Tank connection

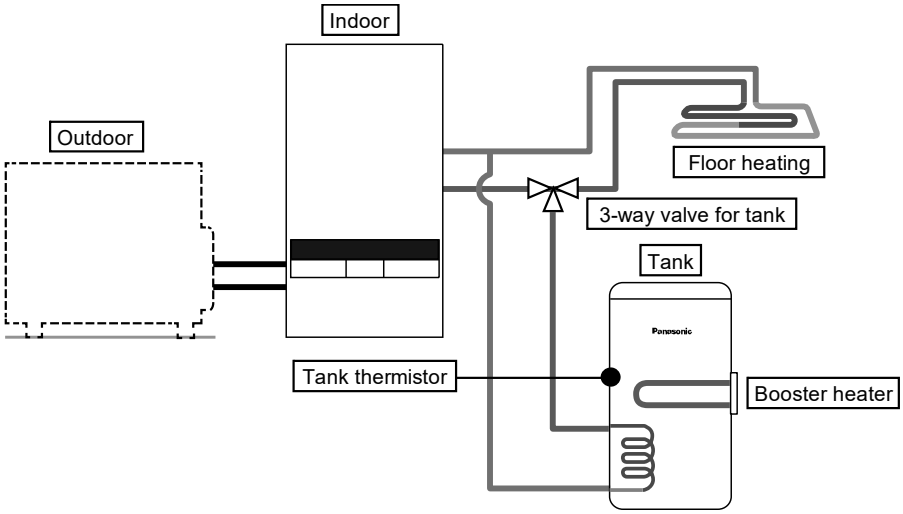

Setting of remote controller

Installer setting
System setup
Optional PCB connectivity - No

Tank connection - Yes

This is an application that connects the DHW tank to the Indoor Unit through 3-way valve.
DHW tank's temperature is detected by tank thermistor (specified by Panasonic).

Tank + Solar connection

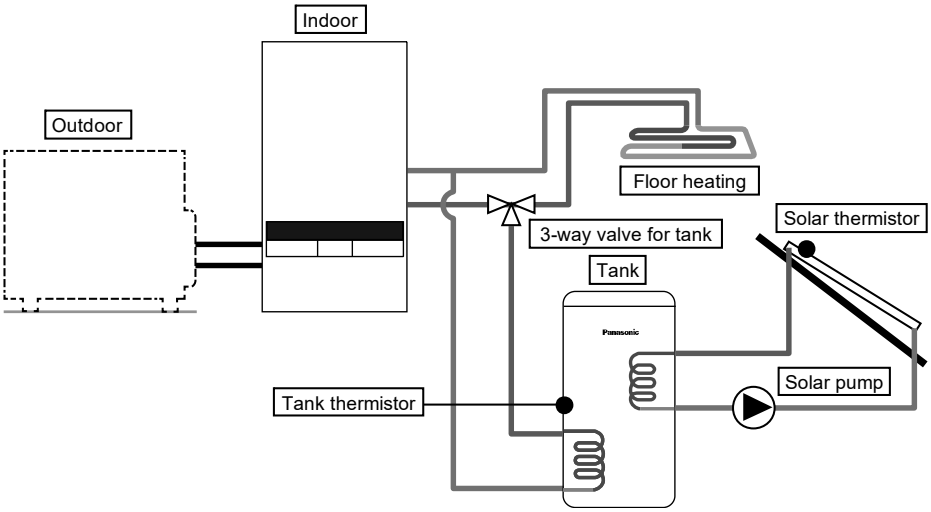

Setting of remote controller

Installer setting
System setup
Optional PCB connectivity - Yes

Tank connection - Yes

Solar connection - Yes
DHW tank
ΔT turn ON
ΔT turn OFF
Antifreeze
Hi limit

This is an application that connects the DHW tank to the Indoor Unit through 3-way valve before connect the solar water heater to heat up the tank. DHW tank's temperature is detected by tank thermistor (specified by Panasonic).
Solar panel's temperature is detected by solar thermistor (specified by Panasonic).
DHW tank shall use tank with built-in solar heat exchange coil independently.
Heat accumulation operates automatically by comparing the temperature of tank thermistor and solar thermistor.
During winter season, solar pump for circuit protection will be activated continuously. If does not want to activate the solar pump operation, please use glycol and set the anti-freezing operation start temperature to -20°C.
This system requires Optional PCB (CZ-NS5P).

NOTE : Room thermistor zone 1 and External room thermostat zone 1 must be connected to main indoor PCB only.

Buffer tank connection

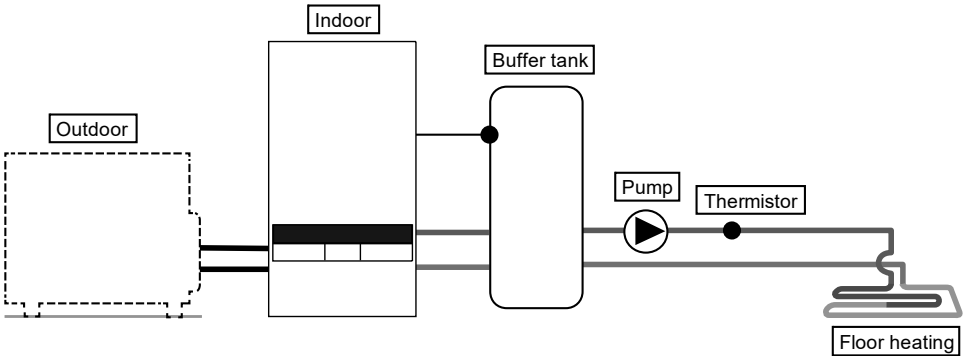

Setting of remote controller

Installer setting
System setup
Optional PCB connectivity - Yes

Buffer Tank connection - Yes
ΔT for buffer tank

This is an application that connects the buffer tank to the Indoor Unit.
Buffer tank's temperature is detected by buffer tank thermistor (specified by Panasonic).
This system requires Optional PCB (CZ-NS5P).

NOTE : Buffer tank thermistor, Room thermistor zone 1 and External room thermostat zone 1 must be connected to main indoor PCB only.

Buffer tank + Solar

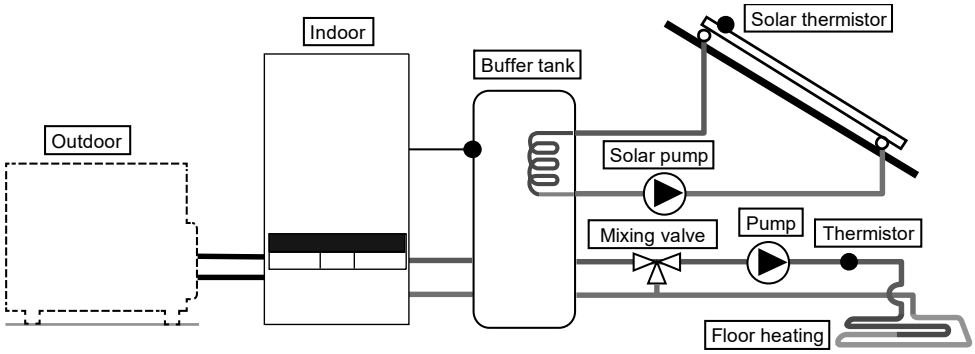

Setting of remote controller

Installer setting
System setup
Optional PCB connectivity - Yes

Buffer Tank connection - Yes
ΔT for buffer tank

Solar connection - Yes
Buffer tank
ΔT turn ON
ΔT turn OFF
Antifreeze
Hi limit

This is an application that connects the buffer tank to the Indoor Unit before connecting to the solar water heater to heat up the tank.
Buffer tank's temperature is detected by buffer tank thermistor (specified by Panasonic).
Solar panel's temperature is detected by solar thermistor (specified by Panasonic).
Buffer tank shall use tank with built-in solar heat exchange coil independently.
During winter season, solar pump for circuit protection will be activated continuously. If does not want to activate the solar pump operation, please use glycol and set the anti-freezing operation start temperature to -20°C.
Heat accumulation operates automatically by comparing the temperature of tank thermistor and solar thermistor.
This system requires Optional PCB (CZ-NS5P).

NOTE : Buffer tank thermistor, Room thermistor zone 1 and External room thermostat zone 1 must be connected to main indoor PCB only.

Boiler connection

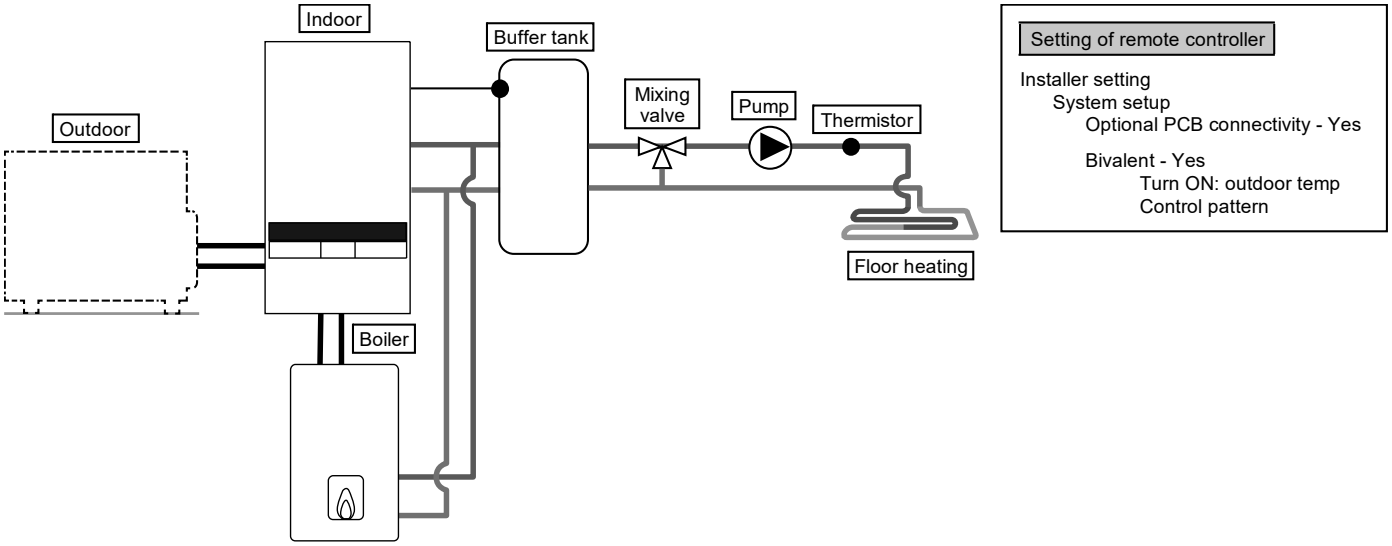

This is an application that connects the boiler to the Indoor Unit, to compensate for insufficient capacity by operate boiler when outdoor temperature drops & heat pump capacity is insufficient.
Boiler is connected parallel with heat pump against heating circuit.
There are 3 modes selectable by remote controller for boiler connection.
Besides that, an application that connects to the DHW tank's circuit to heat up tank's hot water is also possible.
(Operation setting of boiler shall be responsible by installer.)
This system requires Optional PCB (CZ-NS5P).

Depending on the settings of the boiler, it is recommended to install buffer tank as temperature of circulating water may get higher. (It must connect to buffer tank especially when selecting Advanced Parallel setting.)

NOTE : Buffer tank thermistor, Room thermistor zone 1 and External room thermostat zone 1 must be connected to main indoor PCB only.

⚠ WARNING
Panasonic is NOT responsible for incorrect or unsafe situation of the boiler system.

⚠ CAUTION
Make sure the boiler and its integration in the system complies with applicable legislation. Make sure the return water temperature from the heating circuit to the Indoor Unit does NOT exceed 55°C. Boiler is turned off by safety control when the water temperature of the heating circuit exceed 85°C.

12.4.2 How to Fix Cable

12.4.2.1 Connecting with External Device (Optional)

- **All connections shall** follow to the local national wiring standard.
- It is strongly recommended to use manufacturer-recommended parts and accessories for installation.
- For connection to main PCB ④
  1. Two-way valve shall be spring and electronic type, refer to “Field Supply Accessories” table for details. Valve cable shall be (3 x min 1.5 mm^2), of type designation 60245 IEC 57 or heavier, or similarly double insulation sheathed cable.
     * note: - Two-way Valve shall be CE marking compliance component.
     - Maximum load for the valve is 9.8VA.
  2. Three-way valve shall be spring and electronic type. Valve cable shall be (3 x min 1.5 mm^2), of type designation 60245 IEC 57 or heavier, or similarly double insulation sheathed cable.
     * note: - Shall be CE marking compliance component.
     - It shall be directed to heating mode when it is OFF.
     - Maximum load for the valve is 9.8VA.
  3. Room thermostat zone 1 cable must be (4 or 3 x min 0.5 mm^2), of type designation 60245 IEC 57 or heavier cord, or similarly double insulation sheathed cable.
  4. Maximum output power of booster heater shall be ≤ 3 kW. Booster heater cable must be (3 x min 1.5 mm^2), of type designation 60245 IEC 57 or heavier.
  5. Extra pump cable shall be (2 x min 1.5 mm^2), of type designation 60245 IEC 57 or heavier.
  6. Boiler contact cable/ defrost signal cable shall be (2 x min 0.5 mm^2), of type designation 60245 IEC 57 or heavier.
  7. External control shall be connected to 1-pole switch with min 3.0 mm contact gap. Its cable must be (2 x min 0.5 mm^2), double insulation layer of PVC-sheathed or rubber-sheathed cable.
     * note: - Switch used shall be CE compliance component.
     - Maximum operating current shall be less than $3A_{rms}$.
  8. Tank sensor shall be resistance type, please refer to Graph 7.1 for the characteristic and details of sensor. Its cable shall be (2 x min 0.3 mm^2), double insulation layer (with insulation strength of min 30V) of PVC-sheathed or rubber-sheathed cable.

Tank Sensor Resistance Vs Temperature

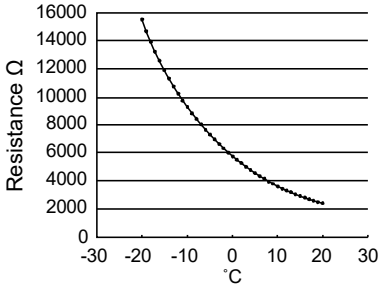

Tank sensor characteristic

  9. Room sensor zone 1, outdoor air sensor and buffer tank sensor cable shall be (2 x min 0.3 mm^2) double insulation layer of PVC-sheathed or rubber-sheathed.
  10. Tank OLP cable must be (2 x min 0.5 mm^2), double insulation layer of PVC-sheathed or rubber-sheathed cable.

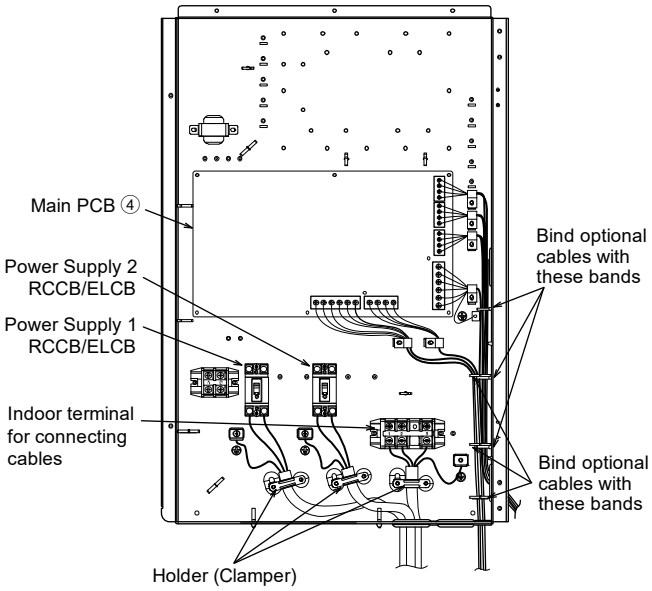

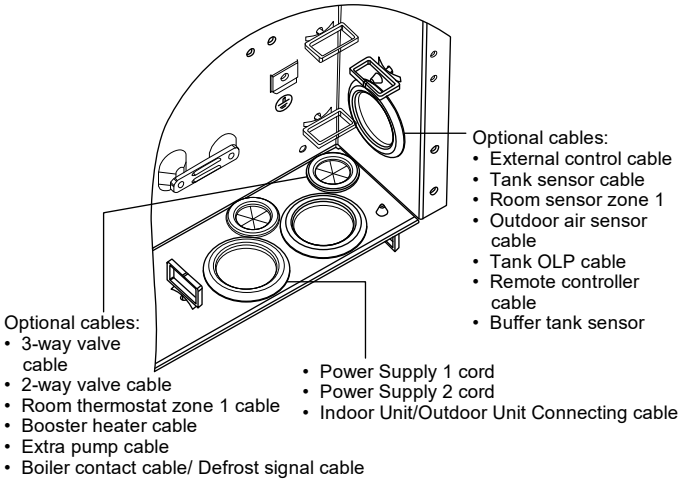

How to guide the optional cables and power supply cord
(view without internal wiring)

- For connection to Optional PCB 9
  1. By connecting Optional PCB, 2 Zone temperature control can be achieved. Please connect mixing valves, water pumps and thermistors in zone 1 and zone 2 to each terminals in Optional PCB.
     Temperature of each zone can be controlled independently by remote controller.
  2. Pump zone 1 and zone 2 cable shall be (2 x min 1.5 mm²), of type designation 60245 IEC 57 or heavier.
  3. Solar pump cable shall be (2 x min 1.5 mm²), of type designation 60245 IEC 57 or heavier.
  4. Pool pump cable shall be (2 x min 1.5 mm²), of type designation 60245 IEC 57 or heavier.
  5. Room thermostat zone 2 cable shall be (4 x min 0.5 mm²), of type designation 60245 IEC 57 or heavier.
  6. Mixing valve zone 1 and zone 2 cable shall be (3 x min 1.5 mm²), of type designation 60245 IEC 57 or heavier.
  7. Room sensor zone 1 and zone 2 cable shall be (2 x min 0.3 mm²), double insulation layer (with insulation strength of minimum 30V) of PVC-sheathed or rubber-sheathed cable.
  8. Pool water sensor and solar sensor cable shall be (2 x min 0.3 mm²), double insulation layer (with insulation strength of minimum 30V) of PVC-sheathed or rubber-sheathed cable.
  9. Water sensor zone 1 and zone 2 cable shall be (2 x min 0.3 mm²), double insulation layer of PVC-sheathed or rubber-sheathed cable.
  10. Demand signal cable shall be (2 x min 0.3 mm²), double insulation layer of PVC-sheathed or rubber-sheathed cable.
  11. SG signal cable shall be (3 x min 0.3 mm²), double insulation layer of PVC-sheathed or rubber-sheathed cable.
  12. Heat/Cool switch cable shall be (2 x min 0.3 mm²), double insulation layer of PVC-sheathed or rubber-sheathed cable.
  13. External compressor switch cable shall be (2 x min 0.3 mm²), double insulation layer of PVC-sheathed or rubber-sheathed cable.

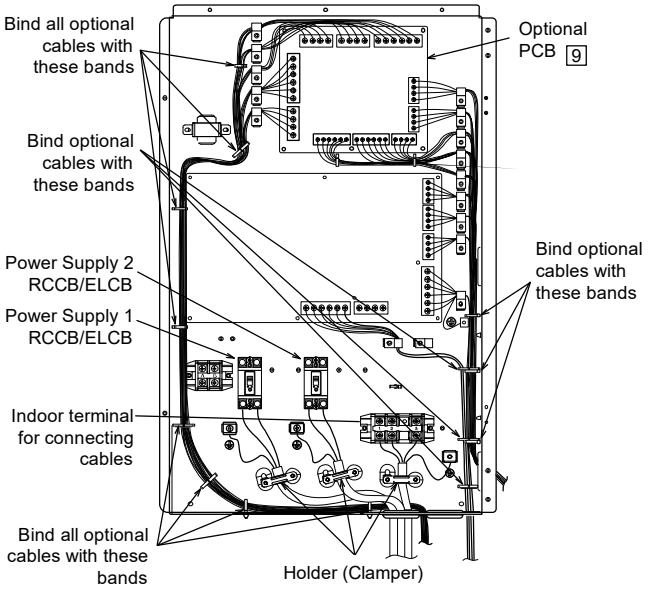

How to guide the optional cables and power supply cord
(view without internal wiring)

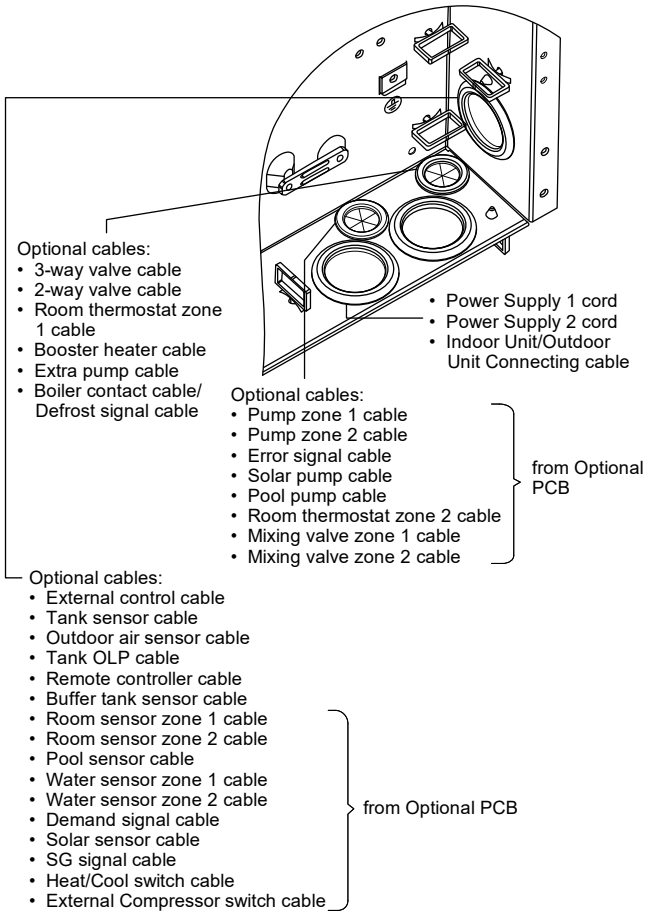

Terminal screw on PCB	Maximum tightening torque cN•m {kgf•cm}
M3	50 {5.1}
M4	120 {12.24}

12.4.2.2 Connecting Cables Length

When connecting cables between Indoor Unit and external devices, the length of the said cables must not exceed the maximum length as shown in the table.

External device	Maximum cables length (m)
Two-way valve	50
Three-way valve	50
Mixing valve	50
Room thermostat	50
Booster heater	50
Extra pump	50
Solar pump	50
Pool pump	50
Pump	50
Boiler contact / Defrost signal	50
External control	50
Tank sensor	30
Room sensor	30
Outdoor air sensor	30
Tank OLP	30
Buffer tank sensor	30
Pool water sensor	30
Solar sensor	30
Water sensor	30
Demand signal	50
SG signal	50
Heat/Cool switch	50
External compressor switch	50

12.4.2.3 Connection of the Main PCB

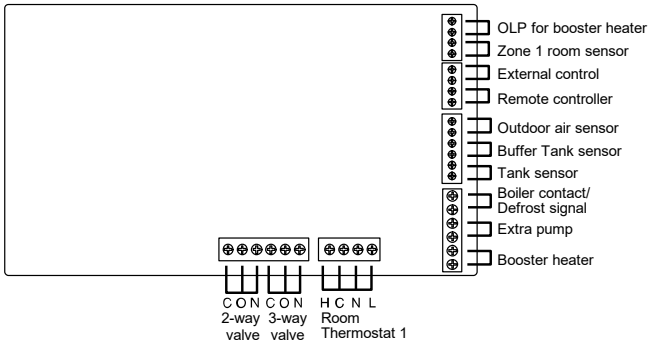

- Signal inputs

Optional Thermostat	L N =AC230V, Heat, Cool=Thermostat heat, Cool terminal
OLP for booster heater	Dry contact Vcc-Bit1, Vcc-Bit2 open/short (System setup necessary) It is connected to the safety device (OLP) of DHW tank.
External control	Dry contact Open=not operate, Short=operate (System setup necessary) Able to turn ON/OFF the operation by external switch
Remote controller	Connected (Please use 2 cores wire for relocation and extension. Total cable length shall be 50m or less.)

- Outputs

3-way valve	AC230V N=Neutral Open, Close=direction (For circuit switching when connected to DHW tank)
2-way valve	AC230V N=Neutral Open, Close (Prevent water circuit pass through during cooling mode)
Extra pump	AC230V (Used when Indoor Unit pump capacity is insufficient)
Booster heater	AC230V (Used when using booster heater in DHW tank)
Boiler contact / Defrost signal	Dry contact (System setup necessary)

- Thermistor inputs

Zone 1 room sensor	PAW-A2W-TSRT ❊It does not work when using the Optional PCB
Outdoor air sensor	AW-A2W-TSOD (Total cable length shall be 30m or less)
Tank sensor	Please use Panasonic specified part
Buffer tank sensor	PAW-A2W-TSBU

12.4.2.4 Connection of Optional PCB (CZ-NS5P)

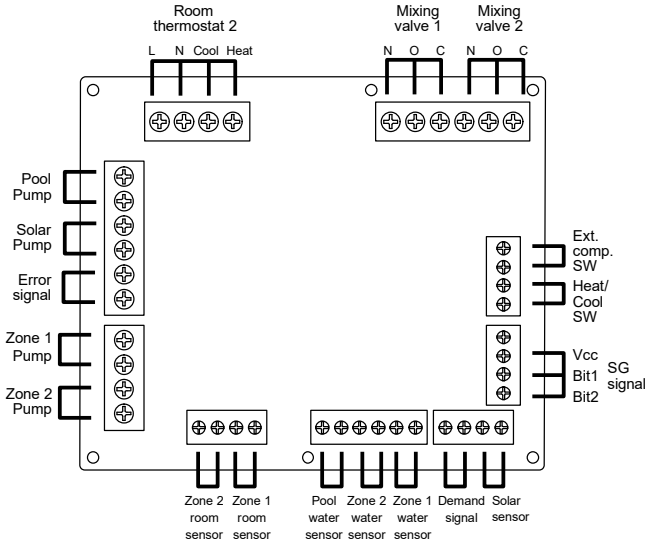

- Signal inputs

Optional Thermostat	L N =AC230V, Heat, Cool=Thermostat heat, Cool terminal
SG signal	Dry contact Vcc-Bit1, Vcc-Bit2 open/short (System setup necessary) Switching SW (Please connect to the 2 contacts controller)
Heat/Cool SW	Dry contact Open=Heat, Short=Cool (System setup necessary)
External comp. SW	Dry contact Open=Comp.OFF, Short=Comp.ON (System setup necessary)
Demand signal	DC 0~10V (System setup necessary) Please connect to the DC 0~10V controller.

- Outputs

Mixing valve	AC230V N=Neutral Open, Close=mixture direction Operating time: 30s~120s	AC230V, 6VA
Pool pump	AC230V	AC 230V, 0.6 A max
Solar pump	AC230V	AC 230V, 0.6 A max
Zone pump	AC230V	AC 230V, 0.6 A max

- Thermistor inputs

Zone room sensor	PAW-A2W-TSRT
Pool water sensor	PAW-A2W-TSHC
Zone water sensor	PAW-A2W-TSHC
Solar sensor	PAW-A2W-TSSO

12.4.2.5 Recommended External Device Specification

- This section explains about the external devices (optional) recommended by Panasonic. Please always ensure to use the correct external device during system installation.
- For optional sensor.
  1. Buffer tank sensor: PAW-A2W-TSBU
     Use for measurement of the buffer tank temperature.
     Insert the sensor into the sensor pocket and paste it on the buffer tank surface.

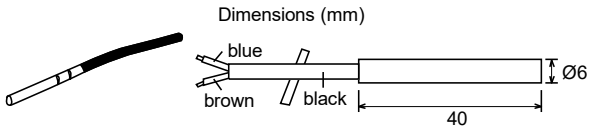

  2. Zone water sensor: PAW-A2W-TSHC
     Use to detect the water temperature of the control zone.
     Mount it on the water piping by using the stainless steel metal strap and contact paste (both are included).

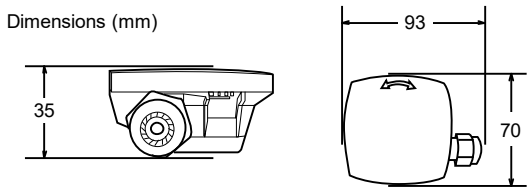

3. Outdoor sensor: PAW-A2W-TSOD
   If the installation location of the outdoor unit is exposed to direct sunlight, the outdoor air temperature sensor will be unable to measure the actual outdoor ambient temperature correctly.
   In this case, optional outdoor temperature sensor can be fixed at a suitable location to more accurately measure ambient temperature.

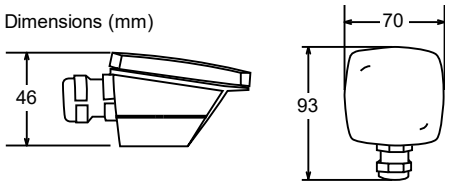

4. Room sensor: PAW-A2W-TSRT
   Install the room temperature sensor to the room which requires room temperature control.

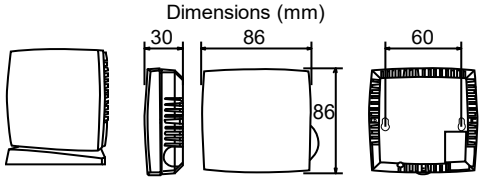

5. Solar sensor: PAW-A2W-TSSO
   Use for measurement of the solar panel temperature.
   Insert the sensor into the sensor pocket and paste it on the solar panel surface.

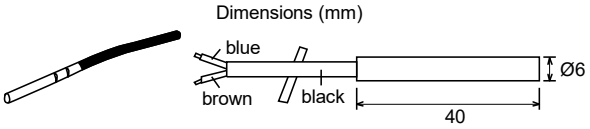

6. Please refer to the table below for sensor characteristic of the sensors mentioned above.

Temperature (°C)	Resistance (kΩ)
30	5.326
25	6.523
20	8.044
15	9.980
10	12.443
5	15.604
0	19.70
-5	25.05
-10	32.10
-15	41.45
-20	53.92
-25	70.53
-30	93.05
-35	124.24
-40	167.82

Temperature (°C)	Resistance (kΩ)
150	0.147
140	0.186
130	0.236
120	0.302
110	0.390
100	0.511
90	0.686
80	0.932
70	1.279
65	1.504
60	1.777
55	2.106
50	2.508
45	3.003
40	3.615
35	4.375

- For optional pump.
  Power supply: AC230V/50Hz, <500W
  Recommended part: Yonos 25/6: made by Wilo

- For optional mixing valve.
  Power supply: AC230V/50Hz (input open/output close)
  Operating time: 30s~120s
  Recommended part: 167032: made by Caleffi

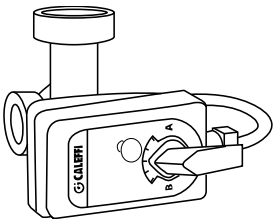

⚠ WARNING

This section is for authorized and licensed electrician/water system installer only. Work behind the front plate secured by screws must only be carried out under supervision of qualified contractor, installation engineer or service person.

12.4.2.6 Network Adaptor 8 Installation (Optional)

1. **Open the Control Board Cover ⑥, then connect the cable included with this adaptor to the CN-CNT connector on the printed circuit board.**
   - If an Optional PCB has been install in the Indoor Unit, connect the CN-CNT connector to Optional PCB 9 .
2. **Insert a flat head screwdriver into the slot on the top of the adaptor and remove the cover. Connect the other end of the CN-CNT cable connector to the connector inside the adaptor.**

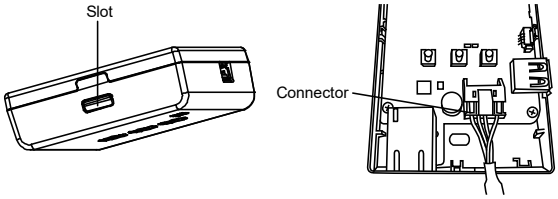

3. **Pull the CN-CNT cable through the hole in the bottom of the adaptor and re-attach the front cover to the back cover.**

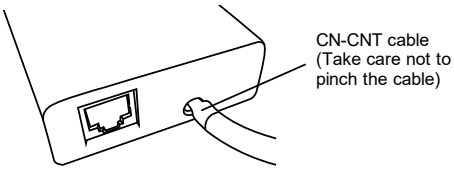

4. **Fix the Network Adaptor 8 to Network Adaptor Holder.**
   Guide the cable as shown in the diagram so that external forces cannot act on the connector in the adaptor.

   Connection examples:

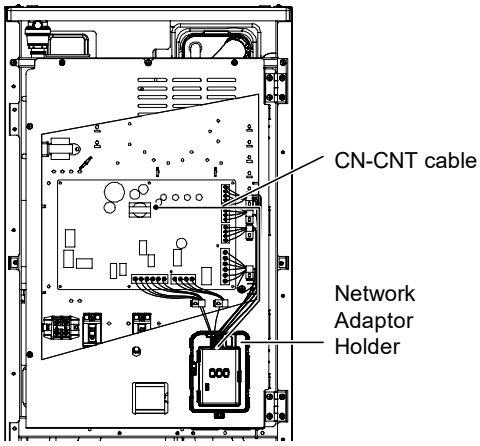

Without Optional PCB

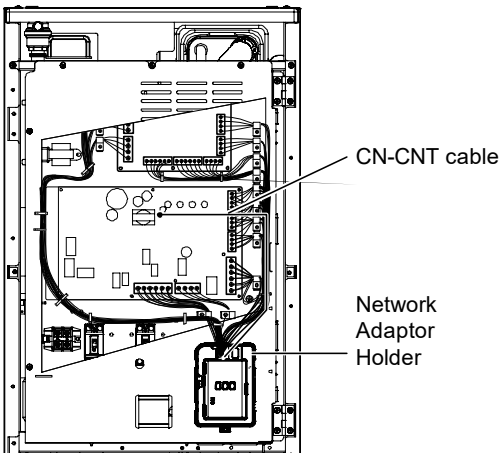

With Optional PCB

12.4.3 System Installation

12.4.3.1 Remote Controller Outline

The LCD display as shown in this manual are for instructional purpose only, and may differ from the actual unit.

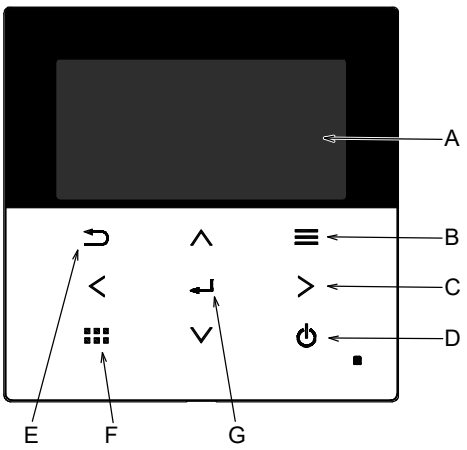

	Name	Function
A:	Main screen	Display information
B:	Menu	Open/Close main menu
C:	Triangle (Move)	Select or change item
D:	Operate	Start/Stop operation
E:	Back	Back to previous item
F:	Quick Menu	Open/Close Quick menu
G:	OK	Confirm

LCD Display
(Actual - Dark background with white icons)

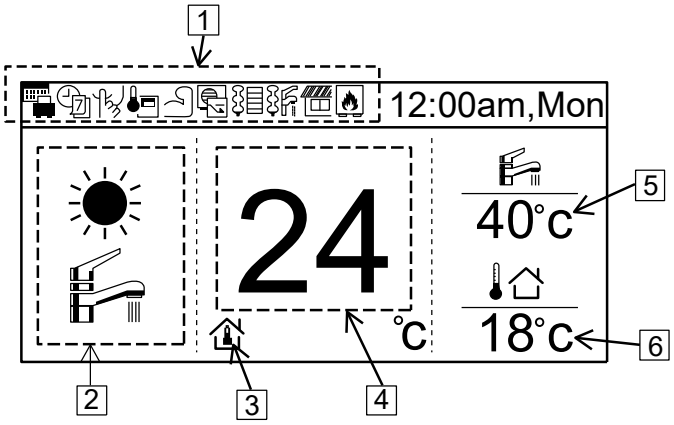

	Name	Function
1:	Function icon	Display set function/status

	Holiday mode		Demand control
	Weekly timer		Room heater
	Quiet mode		Tank heater
	Remote controller room thermostat		Solar
	Powerful mode		Boiler

2:	Mode	Display set mode/current status of mode

	Heating		Cooling		
	Auto		Hot water supply	Auto heating	Auto cooling
	Heat pump operating				

3:	Temp setting	Set room temp		Compensation curve		Set direct water temp	Set pool temp

4:	Display Heat temp	Display current heating temperature (it is set temperature when enclosed by line)
5:	Display tank temp	Display current tank temperature (it is set temperature when enclosed by line)
6:	Outdoor temp	Display outdoor temp

For WH-SDC0309K3E5, WH-SDC0309K6E5
First time of power ON (Start of installation)

Initialization	12:00am,Mon
Initializing.	

When power is ON, firstly initialization screen appears (10 sec)

↓

	12:00am,Mon
[⏻] Start	

When initialization screen ends, it turns to normal screen.

↓

Language	12:00am,Mon
ENGLISH	
FRANÇAIS	
DEUTSCH	
ITALIANO	
▾ Select	[↵] Confirm

When any button is pressed, language setting screen appears.
(NOTE) If initial setting is not performed, it does not go into menu.

When there are two remote controllers installed from the beginning, the first remote controller to set and confirm language will be recognised as main remote controller.

↓ Set language & confirm

Clock format	12:00am,Mon
24h	
▾	
am/pm	
▾ Select	[↵] Confirm

When language is set, setting screen of time display appears (24h/am/pm)

↓ Set time display & confirm

Date & time	12:00am,Mon
Year/Month/Day	Hour : Min
▲	
2015 / 01 / 01	12 : 00
▼	
⇕ Select	[↵] Confirm

YY/MM/DD/Time setup screen appears

↓ Set YY/MM/DD/Time & confirm

Front grille	12:00am,Mon
Is O/D front grille fixed?	
No	
Yes	
▾ Select	[↵] Confirm

If set No & confirm, a caution message will be displayed to ensure outdoor front grille is installed before proceed to operate the unit.

➡

Caution
To prevent injury, fix front grille before ope.
[↩] Close

↓ Set Yes & confirm if outdoor front grille has been installed

	12:00am,Mon
[⏻] Start	

Back to initial screen

↓ Press menu, select Installer setup

Main menu	12:00am,Mon
System check	
Personal setup	
Service contact	
Installer setup	
▲ Select	[↵] Confirm

↓ Confirm to go into Installer setup

For WH-SXC09K3E5, WH-SXC09K6E5, WH-SXC12K6E5
First time of power ON (Start of installation)

Initialization	12:00am,Mon
Initializing.	

When power is ON, firstly initialization screen appears (10 sec)

↓

	12:00am,Mon
[⏻] Start	

When initialization screen ends, it turns to normal screen.

↓

Language	12:00am,Mon
ENGLISH	
FRANÇAIS	
DEUTSCH	
ITALIANO	
▼ Select	[↵] Confirm

When any button is pressed, language setting screen appears.
(NOTE) If initial setting is not performed, it does not go into menu.

↓ Set language & confirm

Clock format	12:00am,Mon
24h	
▼	
am/pm	
▼ Select	[↵] Confirm

When language is set, setting screen of time display appears (24h/am/pm)

↓ Set time display & confirm

Date & time	12:00am,Mon
Year/Month/Day	Hour : Min
▲	
2015 / 01 / 01	12 : 00
▼	
⇕▸ Select	[↵] Confirm

YY/MM/DD/Time setup screen appears

↓ Set YY/MM/DD/Time & confirm

	12:00am,Mon
[⏻] Start	

Back to initial screen

↓ Press menu, select Installer setup

Main menu	12:00am,Mon
System check	
Personal setup	
Service contact	
Installer setup	
▲ Select	[↵] Confirm

↓ Confirm to go into Installer setup

12.4.3.2 Installer Setup

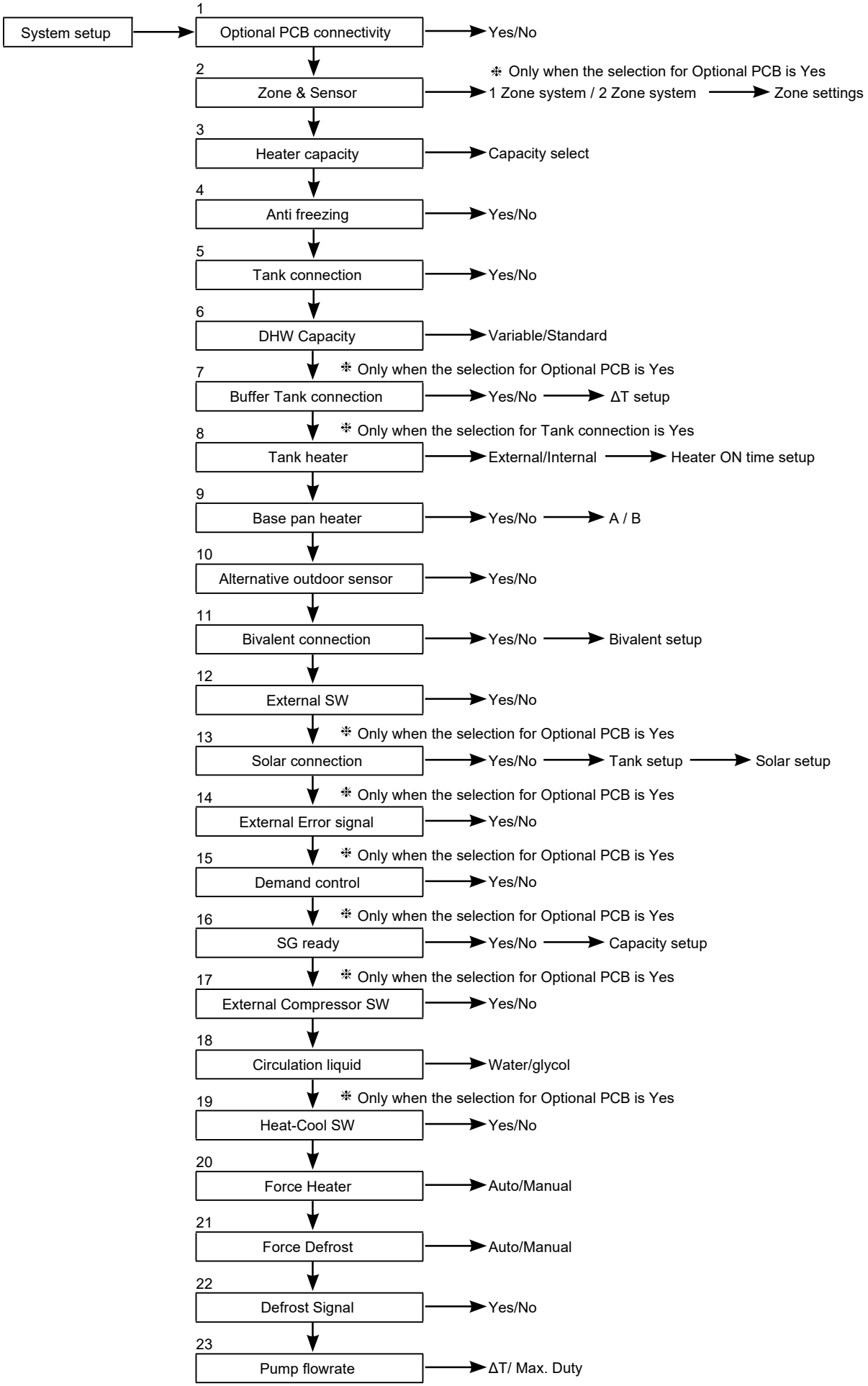

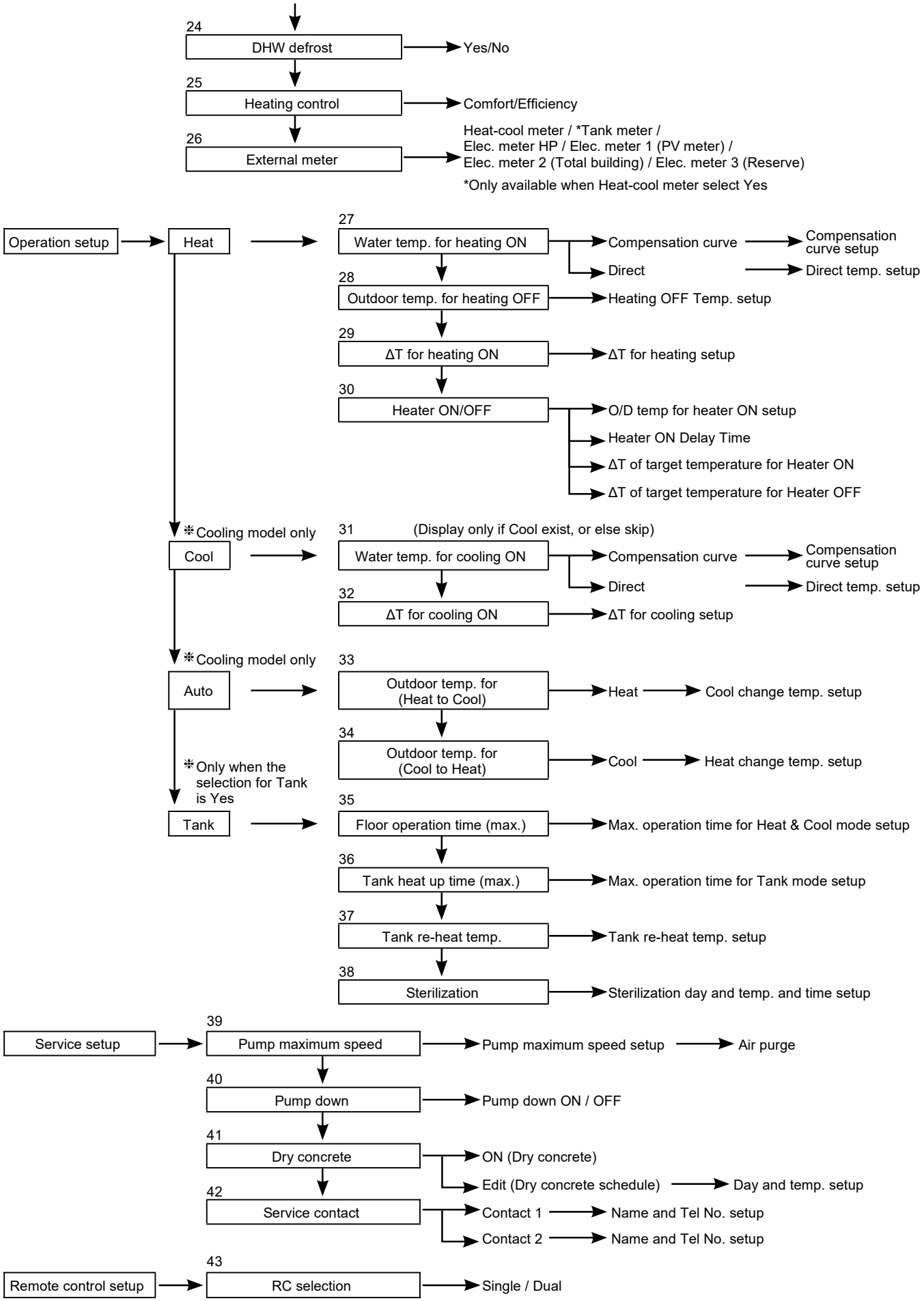
24
DHW defrost
Yes/No
25
Heating control
Comfort/Efficiency
26
External meter
Heat-cool meter / *Tank meter /
Elec. meter HP / Elec. meter 1 (PV meter) /
Elec. meter 2 (Total building) / Elec. meter 3 (Reserve)
*Only available when Heat-cool meter select Yes
Operation setup
Heat
27
Water temp. for heating ON
Compensation curve
Compensation curve setup
Direct
Direct temp. setup
28
Outdoor temp. for heating OFF
Heating OFF Temp. setup
29
ΔT for heating ON
ΔT for heating setup
30
Heater ON/OFF
O/D temp for heater ON setup
Heater ON Delay Time
ΔT of target temperature for Heater ON
ΔT of target temperature for Heater OFF
❄Cooling model only
Cool
31
(Display only if Cool exist, or else skip)
Water temp. for cooling ON
Compensation curve
Compensation curve setup
Direct
Direct temp. setup
32
ΔT for cooling ON
ΔT for cooling setup
❄Cooling model only
Auto
33
Outdoor temp. for (Heat to Cool)
Heat
Cool change temp. setup
34
Outdoor temp. for (Cool to Heat)
Cool
Heat change temp. setup
❄Only when the selection for Tank is Yes
Tank
35
Floor operation time (max.)
Max. operation time for Heat & Cool mode setup
36
Tank heat up time (max.)
Max. operation time for Tank mode setup
37
Tank re-heat temp.
Tank re-heat temp. setup
38
Sterilization
Sterilization day and temp. and time setup
Service setup
39
Pump maximum speed
Pump maximum speed setup
Air purge
40
Pump down
Pump down ON / OFF
41
Dry concrete
ON (Dry concrete)
Edit (Dry concrete schedule)
Day and temp. setup
42
Service contact
Contact 1
Name and Tel No. setup
Contact 2
Name and Tel No. setup
Remote control setup
43
RC selection
Single / Dual

12.4.3.3 System Setup

1. Optional PCB connectivity | Initial setting: No

If function below is necessary, please purchase and install Optional PCB.
Please select Yes after installing Optional PCB.

- 2-zone control
- Pool
- Solar
- External error signal output
- Demand control
- SG ready
- Stop heat source unit by external SW

```
System setup                    12:00am,Mon
Optional PCB connectivity
Zone & Sensor
Heater capacity
Anti freezing
Select                  [↵] Confirm
```

2. Zone & Sensor | Initial setting: Room and Water temp.

If no Optional PCB connectivity
Select sensor of room temperature control from the following 3 items
① Water temperature (circulation water temperature)
② Room thermostat (Internal or External)
③ Room thermistor

When there is Optional PCB connectivity
① Select either 1 zone control or 2 zone control.
If it is 1 zone, select either room or pool, select sensor
If it is 2 zone, after select sensor of zone 1, select either room or pool for zone 2, select sensor
(NOTE) In 2 zone system, pool function can be set at zone 2 only.

```
System setup                    12:00am,Mon
Optional PCB connectivity
Zone & Sensor
Heater capacity
Anti freezing
Select                  [↵] Confirm
```

3. Heater capacity | Initial setting: Depend on model

If there is built-in Heater, set the selectable heater capacity.

(NOTE) There are models which cannot select heater.

```
System setup                    12:00am,Mon
Optional PCB connectivity
Zone & Sensor
Heater capacity
Anti freezing
Select                  [↵] Confirm
```

4. Anti freezing | Initial setting: Yes

Operate anti-freezing of water circulation circuit.
If select Yes, when the water temperature is reaching its freezing temperature, the circulation pump will start up. If the water temperature does not reach the pump stop temperature, back-up heater will be activated.

(NOTE) If set No, when the water temperature is reaching its freezing temperature or below 0°C, the water circulation circuit may freeze and cause malfunction.

```
System setup                    12:00am,Mon
Optional PCB connectivity
Zone & Sensor
Heater capacity
Anti freezing
Select                  [↵] Confirm
```

5. Tank connection | Initial setting: No

Select whether it is connected to hot water tank or not.
If set Yes, it becomes setting that uses hot water function.
Hot water temperature of tank can be set from main screen.

```
System setup                    12:00am,Mon
Zone & Sensor
Heater capacity
Anti freezing
Tank connection
Select                  [↵] Confirm
```

6. DHW Capacity | Initial setting: Variable

Variable DHW capacity setting normally run with efficient boiling which is energy saving heating. But while hot water usage high and tank water temperature low, variable DHW mode will run with fast heat up which heat up the tank with high heating capacity.
If standard DHW capacity setting is selected, heat pump run with heating rated capacity at tank heat up operation.

```
System setup                    12:00am,Mon
Zone & Sensor
Heater capacity
Anti freezing
DHW Capacity
Select                  [↵] Confirm
```

7. Buffer Tank connection | Initial setting: No

Select whether it is connected to buffer tank for heating or not.
If buffer tank is used, please set Yes.
Connect buffer tank thermistor and set, ΔT (ΔT use to increase primary side temp against secondary side target temp).
(NOTE) Does not display if there is no Optional PCB.
If the buffer tank capacity is not so large, please set larger value for ΔT.

System setup	12:00am,Mon
Heater capacity	
Anti freezing	
Tank connection	
Buffer tank connection	
Select	[↵] Confirm

8. Tank heater | Initial setting: Internal

Select to use either built-in heater or external heater as heater for hot water tank.
If heater is installed on tank, please select External.

(NOTE) Does not display if there is no tank for hot water supply.

Please set "Tank heater" to "ON" in the "Function setup" from remote controller when using heater to boil the tank.

System setup	12:00am,Mon
Anti freezing	
Tank connection	
Buffer tank connection	
Tank heater	
Select	[↵] Confirm

External A setting which is using booster heater installed on DHW tank to boil the tank.
The permissible heater capacity is 3kW and below.
The operation to boil the tank with heater is as below.
In addition, be sure to set suitable "Tank heater: ON time"

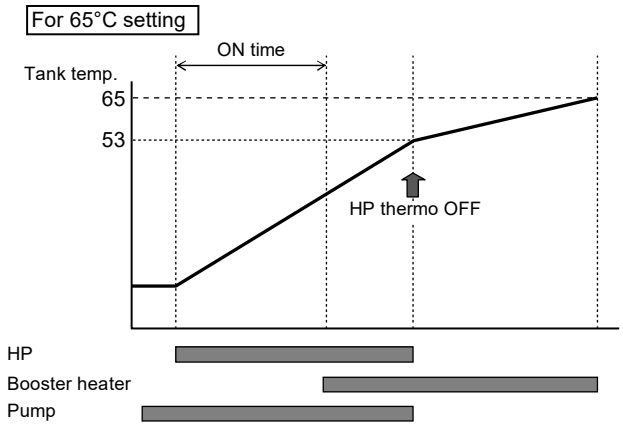

Internal A setting which is using backup heater of Indoor Unit to boil the tank.
The operation to boil the tank with heater is as below.

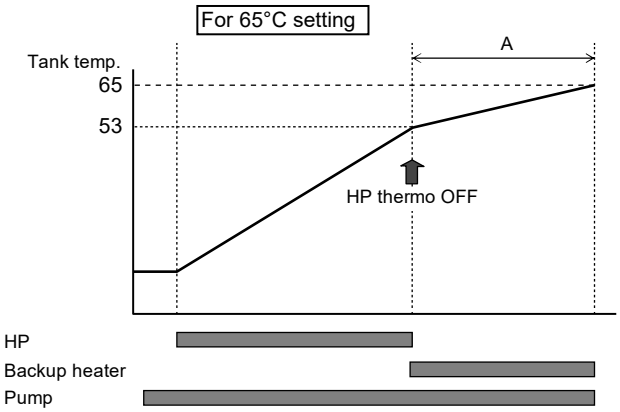

9. Base pan heater | Initial setting: No

Select whether Base pan heater is installed or not.
If set Yes, select to use either heater A or B.

A: Turn on Heater when heating with defrost operation only
B: Turn on Heater at heating

System setup	12:00am,Mon
Tank connection	
Buffer tank connection	
Tank heater	
Base pan heater	
Select	[↵] Confirm

10. Alternative outdoor sensor | Initial setting: No

Set Yes if outdoor sensor is installed.
Controlled by optional outdoor sensor without reading the outdoor sensor of heat pump unit.

System setup	12:00am,Mon
Buffer tank connection	
Tank heater	
Base pan heater	
Alternative outdoor sensor	
Select	[↵] Confirm

11. Bivalent connection | Initial setting: No

System setup	12:00am,Mon
Tank heater	
Base pan heater	
Alternative outdoor sensor	
Bivalent connection	
⬍ Select	[↵] Confirm

Set if heat pump linked with boiler operation.
Connect the start signal of the boiler in boiler contact terminal (main PCB).
Set Bivalent connection to YES.
After that, please begin setting according to remote controller instruction.
Boiler icon will be displayed on remote controller top screen.

After Bivalent connection Set YES, there is two option of control pattern to be select, (SG Ready / Auto)

1) SG ready (Only available to set when Optional PCB set to YES)
   - SG Ready input from Optional PCB terminal control ON/OFF of boiler and heat pump as below condition

SG signal		Operation pattern
Vcc-bit1	Vcc-bit2	
Open	Open	Heat pump OFF, Boiler OFF
Short	Open	Heat pump ON, Boiler OFF
Open	Short	Heat pump OFF, Boiler ON
Short	Short	Heat pump ON, Boiler ON

* This bivalent SG ready input is sharing same terminal as [16. SG ready] connection. Only one of these two setting can be set at the same time. When one is set, another setting will reset to not set.

2) Auto (If Optional PCB no Set, bivalent control pattern will set to this auto as default value)

There are 3 different modes in the boiler operation. Movement of each modes are shown below.
① Alternative (switch to boiler operation when drops below setting temperature)
② Parallel (allow boiler operation when drops below setting temperature)
③ Advanced Parallel (able to slightly delay boiler operation time of parallel operation)

When the boiler operation is “ON”, “boiler contact” is “ON”, “_”(underscore) will be displayed below the boiler icon.
Please set target temperature of boiler to be the same as heat pump temperature.
When boiler temperature is higher than heat pump temperature, zone temperature cannot be achieved if mixing valve is not installed.
This product only allows one signal to control the boiler operation. Operation setting of boiler shall be responsible by installer.

Alternative mode

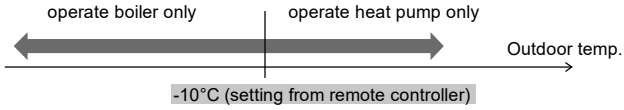

Parallel mode

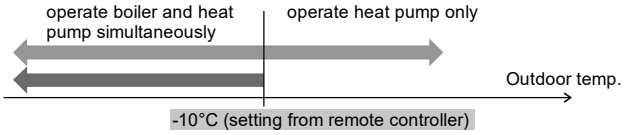

Advanced Parallel mode

For heating

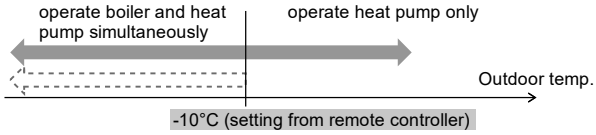

AND

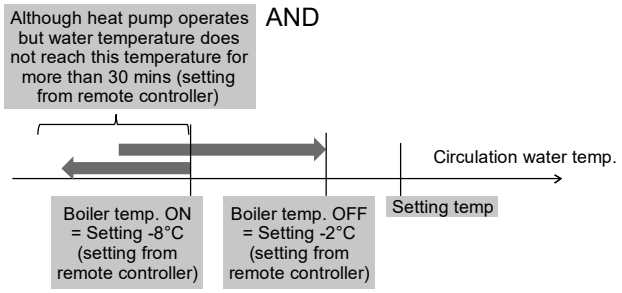

For DHW tank

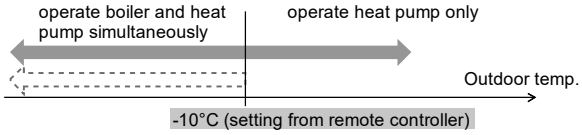

AND

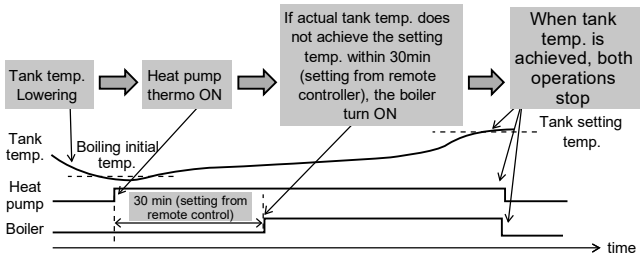

In Advanced Parallel mode, setting for both heating and tank can be made simultaneously. During operation of “Heating/Tank” mode, when each time the mode is switched, the boiler output will be reset to OFF. Please have good understanding on the boiler control characteristic in order to select the optimal setting for the system.

3) Smart

There are Energy price (both electricity and boiler) and Schedule to be set on remote controller.
Operation setting of Energy price and Schedule shall be responsible by installer.
Based on these settings, system will calculate the final price for both electricity and boiler.
When final price of Electricity is lower than Boiler's, heat pump will operate.
When final price of Electricity is higher than Boiler's, boiler will operate.

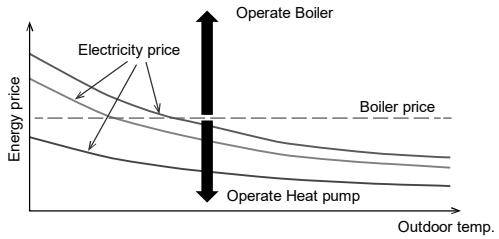

12. External SW | Initial setting: No

Able to turn ON/OFF the operation by external switch.

System setup	12:00am,Mon
Base pan heater	
Alternative outdoor sensor	
Bivalent connection	
External SW	
⬍ Select	[↵] Confirm

13. Solar connection | Initial setting: No

Set when solar water heater is installed.

Setting include items below.
① Set either buffer tank or DHW tank for connection with solar water heater.
② Set temperature difference between solar panel thermistor and buffer tank or DHW tank thermistor to operate the solar pump.
③ Set temperature difference between solar panel thermistor and buffer tank or DHW tank thermistor to stop the solar pump.
④ Anti-freezing operation start temperature (please change setting based on usage of glycol.)
⑤ Solar pump stop operation when it exceeds high limit temperature (when tank temperature exceed designated temperature (70~90°C))

System setup	12:00am,Mon
Alternative outdoor sensor	
Bivalent connection	
External SW	
Solar connection	
⬍ Select	[↵] Confirm

14. External Error Signal | Initial setting: No

Set when external error display unit is installed.
Turn on Dry Contact SW when error happened.

(NOTE) Does not display when there is no Optional PCB.
When error occurs, error signal will be ON.
After turn off "close" from the display, error signal will still remain ON.

System setup	12:00am,Mon
Bivalent connection	
External SW	
Solar connection	
External error signal	
⬍ Select	[↵] Confirm

15. Demand control | Initial setting: No

Set when there is demand control.
Adjust terminal voltage within 1 ~ 10 V to change the operating current limit.

(NOTE) Does not display when there is no Optional PCB.

System setup	12:00am,Mon
External SW	
Solar connection	
External error signal	
Demand control	
⬍ Select	[↵] Confirm

Analog input [v]	Rate [%]		
0.0	not activate		
0.1 ~ 0.6			
0.7	10	not activate	
0.8			
0.9 ~ 1.1	10		
1.2	15	10	
1.3			
1.4 ~ 1.6	15		
1.7	20	15	
1.8			
1.9 ~ 2.1	20		
2.2	25	20	
2.3			
2.4 ~ 2.6	25		
2.7	30	25	
2.8			
2.9 ~ 3.1	30		
3.2	35	30	
3.3			
3.4 ~ 3.6	35		
3.7	40	35	
3.8			

Analog input [v]	Rate [%]		
3.9 ~ 4.1	40		
4.2	45	40	
4.3			
4.4 ~ 4.6	45		
4.7	50	45	
4.8			
4.9 ~ 5.1	50		
5.2	55	50	
5.3			
5.4 ~ 5.6	55		
5.7	60	55	
5.8			
5.9 ~ 6.1	60		
6.2	65	60	
6.3			
6.4 ~ 6.6	65		
6.7	70	65	
6.8			
6.9 ~ 7.1	70		
7.2	75	70	
7.3			

Analog input [v]	Rate [%]		
7.4 ~ 7.6	75		
7.7	80	75	
7.8			
7.9 ~ 8.1	80		
8.2	85	80	
8.3			
8.4 ~ 8.6	85		
8.7	90	85	
8.8			
8.9 ~ 9.1	90		
9.2	95	90	
9.3			
9.4 ~ 9.6	95		
9.7	100	95	
9.8			
9.9 ~	100		

*A minimum operating current is applied on each model for protection purpose.
*0.2 voltage hysteresis is provided.
* The value of voltage after 2nd decimal point are cut off.

16. SG ready | Initial setting: No

System setup 12:00am,Mon
Solar connection
External error signal
Demand control
SG ready
Select [↵] Confirm

Switch operation of heat pump by open-short of 2 terminals.
Setting belows are possible

SG signal		Working pattern
Vcc-bit1	Vcc-bit2	
Open	Open	Normal
Short	Open	Heat pump and Heater OFF
Open	Short	Capacity 1
Short	Short	Capacity 2

Capacity setting 1
- DHW capacity ___%
- Heating capacity ___%
- Cooling capacity ___°C

Capacity setting 2
- DHW capacity ___%
- Heating capacity ___%
- Cooling capacity ___°C

} Set by SG ready setting of remote controller

(When SG ready set to YES, Bivalent control pattern will set to Auto.)

17. External Compressor SW | Initial setting: No

System setup 12:00am,Mon
External error signal
Demand control
SG ready
External compressor SW
Select [↵] Confirm

Set when external compressor SW is connected.
SW is connected to external devices to control power consumption, ON signal will stop compressor's operation. (Heating operation etc. are not cancelled).

(NOTE) Does not display if there is no Optional PCB.

If follow Swiss standard power connection, need to turn on DIP SW (SW2 pin3) of main unit PCB. Short/Open signal used to ON/OFF tank heater (for sterilization purpose)

18. Circulation Liquid | Initial setting: Water

System setup 12:00am,Mon
Demand control
SG ready
External compressor SW
Circulation liquid
Select [↵] Confirm

Set circulation of heating water.

There are 2 types of settings, water and glycol.

(NOTE) Please set glycol when using anti-freeze liquid.
It may cause error if setting is wrong.

19. Heat-Cool SW | Initial setting: Disable

System setup 12:00am,Mon
SG ready
External compressor SW
Circulation liquid
Heat-Cool SW
Select [↵] Confirm

Able to switch (fix) heating & cooling by external switch.

(Open) : Fix at Heating (Heating +DHW)
(Short) : Fix at Cooling (Cooling +DHW)

(NOTE) This setting is disabled for model without Cooling.
(NOTE) Does not display if there is no Optional PCB.

Timer function cannot be used. Cannot use Auto mode.

20. Force Heater | Initial setting: Manual

System setup 12:00am,Mon
External compressor SW
Circulation liquid
Heat-Cool SW
Force heater
Select [↵] Confirm

Under manual mode, user can turn on force heater through quick menu.

If selection is 'auto', force heater mode will turn automatically if pop up error happen during operation.
Force heater will operate follow the latest mode selection, mode selection is disable under force heater operation.

Heater source will ON during force heater mode.

21. Force Defrost | Initial setting: Manual

Under manual code, user can turn on force defrost through quick menu.

If selection is 'auto', outdoor unit will run defrost operation once if heat pump have long hour of heating without any defrost operation before at low ambient condition. (Even auto is selected, user still can turn on force defrost through quick menu)

System setup	12:00am,Mon
Circulation liquid	
Heat-Cool SW	
Force heater	
Force defrost	
Select	[↵] Confirm

22. Defrost signal | Initial setting: No

Defrost signal sharing same terminal as bivalent contact in main board. When defrost signal set to YES, bivalent connection reset to NO. Only one function can be set between defrost signal and bivalent.

When defrost signal set to YES, during defrost operation is running at outdoor unit defrost signal contact turn ON. Defrost signal contact turn OFF after defrost operation end. (Purpose of this contact output is to stop indoor fan coil or water pump during defrost operation).

System setup	12:00am,Mon
Heat-Cool SW	
Force heater	
Force defrost	
Defrost signal	
Select	[↵] Confirm

23. Pump flowrate | Initial setting: ΔT

If pump flowrate setting is ΔT, unit adjust pump duty to get different of water inlet and outlet base on setting on * ΔT for heating ON and * ΔT for cooling ON in operation setup menu during room side operation.

If pump flowrate setting is set to Max. duty, unit will set the pump duty to the set duty at *Pump maximum speed in service setup menu during room side operation.

System setup	12:00am,Mon
Force heater	
Force defrost	
Defrost signal	
Pump flowrate	
Select	[↵] Confirm

24. DHW defrost | Initial setting: Yes

When DHW defrost set to YES, hot water of domestic hot water tank will be used during defrost cycle.

When DHW defrost set to NO, hot water of floor heating circuit will be used during defrost cycle.

System setup	12:00am,Mon
Force defrost	
Defrost signal	
Pump flowrate	
DHW defrost	
Select	[↵] Confirm

25. Heating control | Initial setting : Comfort

There are two modes to select for compressor frequency control : Comfort or Efficiency.
When set to Comfort mode, compressor will run at zone limit maximum frequency to reach set temperature faster.
When set to Efficiency mode, compressor will run at part load frequency at initial stage for energy saving.

System setup	12:00am,Mon
Defrost signal	
Pump flowrate	
DHW defrost	
Heating control	
Select	[↵] Confirm

26. External meter

Initial setting : [Heat-cool meter : No]
[Tank meter : No] *only available when Heat-cool meter select Yes
[Elec. meter HP : No]
[Elec. meter 1 (PV meter) : No]
[Elec. meter 2 (Total building) : No]
[Elec. meter 3 (Reserve) : No]

System setup	12:00am,Mon
Pump flowrate	
DHW defrost	
Heating control	
External meter	
Select	[↵] Confirm

There are two systems for generation meter connection : one generation meter system (Heat-cool meter) or two generation meter system (Heat-cool meter and Tank meter)
Both systems can provide all generation data of heating, cooling and DHW directly from external meter.

If Heat-cool meter is set to Yes, it will read from external meter for heat pump's energy generation data during heating, cooling and DHW operation*1.
If Heat-cool meter is set to No, it will base on unit's calculation for heat pump's energy generation data during heating, cooling and DHW operation.
If Tank meter is set to Yes, it will read from external meter for heat pump's energy generation data during DHW operation*1.

If Elec. meter HP is set to Yes, it will read from external meter for heat pump's energy consumption data.
If Elec. meter HP is set to No, it will base on unit's calculation for heat pump's energy consumption data.

If Elec. meter 1 (PV meter) is set to Yes, it will read from external meter for energy generation data of solar system and display it on Cloud system.
If Elec. meter 2 (Building) is set to Yes, it will read from external meter for energy consumption data of the building and display it on Cloud system.
If Elec. meter 3 (Reserve) is set to Yes, it will read from external meter for energy consumption data obtained from reserved electricity meter and display it on Cloud system.

*1 Set Heat-cool meter to Yes and set Tank meter to No when 1 generation meter system is installed.
Set Heat-cool meter to Yes and set Tank meter to Yes when 2 generation meter system is installed.

Remark : Elec. meter HP refers to Electricity meter that measures Heat Pump unit's consumption.
Elec. meter 1 / 2 / 3 refers to Electricity meter no. 1 / no. 2 / no. 3

12.4.3.4 Operation Setup

Heat

27. Water temp. for heating ON | Initial setting: compensation curve

Set target water temperature to operate heating operation.
Compensation curve: Target water temperature change in conjunction with outdoor ambient temperature change.
Direct: Set direct circulation water temperature.

In 2 zone system, zone 1 and zone 2 water temperature can be set separately.

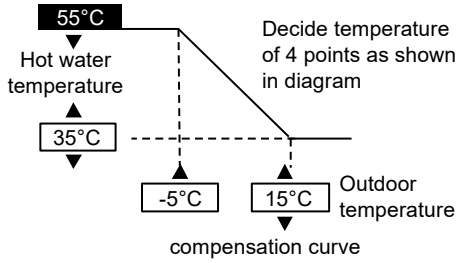

28. Outdoor temp. for heating OFF | Initial setting: 24°C

Set outdoor temp to stop heating.
Setting range is 5°C ~ 35°C

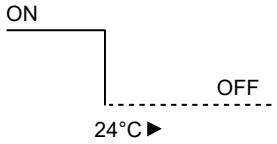

29. ΔT for heating ON | Initial setting: 5°C

Set temp difference between out temp & return temp of circulating water of Heating operation.
When temp gap is enlarged, it is energy saving but less comfort. When the gap gets smaller, energy saving effect gets worse but it is more comfortable.
Setting range is 1°C ~ 15°C

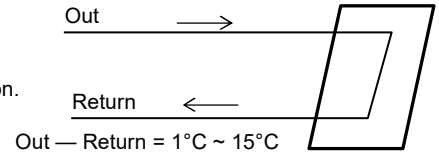

30. Heater ON/OFF

a. Outdoor temp. for heater ON | Initial setting: 0°C

Set outdoor temp when back-up heater starts to operate.
Setting range is -20°C ~ 15°C

User shall set whether to use or not to use heater.

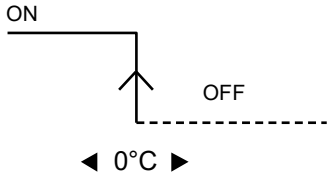

b. Heater ON delay time | Initial setting: 30 minutes

Set delay time from compressor ON for heater to turn ON if not achieve water set temperature.
Setting range is 10 minutes ~ 60 minutes

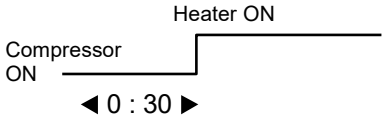

c. Heater ON: ΔT of target Temp | Initial setting: -4°C

Set water temperature for heater to turn on at heat mode.
Setting range is -10°C ~ -2°C

d. Heater OFF: ΔT of target Temp | Initial setting: -2°C

Set water temperature for heater to turn off at heat mode.
Setting range is -8°C ~ 0°C

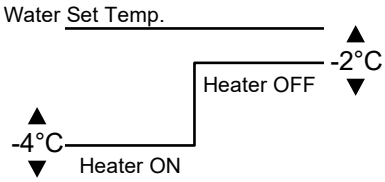

Cool

31. Water temp. for cooling ON | Initial setting: compensation curve

Set target water temperature to operate cooling operation.
Compensation curve: Target water temperature change in conjunction with outdoor ambient temperature change.
Direct : Set direct circulation water temperature.

In 2 zone system, zone 1 and zone 2 water temperature can be set separately.

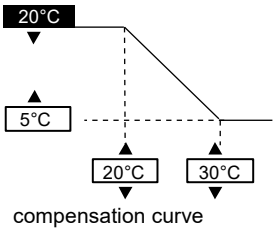

32. ΔT for cooling ON | Initial setting: 5°C

Set temp difference between out temp & return temp of circulating water of Cooling operation.

When temp gap is enlarged, it is energy saving but less comfort. When the gap gets smaller, energy saving effect gets worse but it is more comfortable.
Setting range is 1°C ~ 15°C

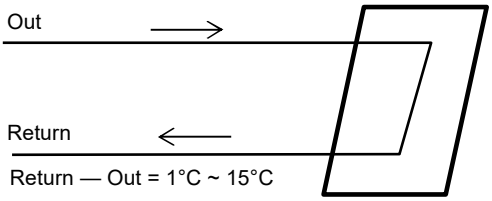

Auto

33. Outdoor temp. for (Heat to Cool) | Initial setting: 15°C

Set outdoor temp that switches from heating to cooling by Auto setting.
Setting range is 5°C ~ 25°C

Timing of judgement is every 1 hour

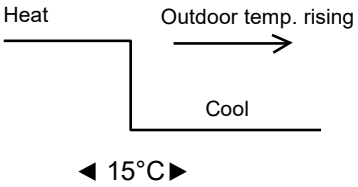

34. Outdoor temp. for (Cool to Heat) | Initial setting: 10°C

Set outdoor temp that switches from Cooling to Heating by Auto setting.
Setting range is 5°C ~ 25°C

Timing of judgement is every 1 hour

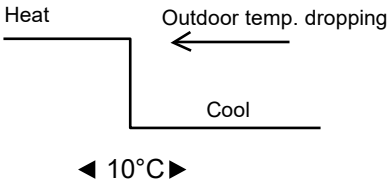

Tank

35. Floor operation time (max) | Initial setting: 8h

Set max operating hours of heating.
When max operation time is shortened, it can boil the tank more frequently.

It is a function for Heating + Tank operation.

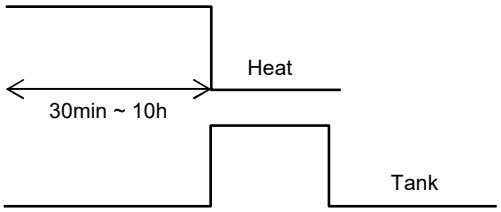

36. Tank heat up time (max) | Initial setting: 60min

Set max boiling hours of tank.
When max boiling hours are shortened, it immediately returns to Heating operation, but it may not fully boil the tank.

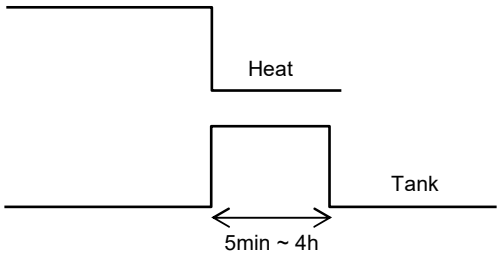

37. Tank re-heat temp. | Initial setting: -8°C

Set temp to perform reboil of tank water.
(When boiled by heat pump only, (51°C – Tank re-heat temp) shall become max temp.)

Setting range is -12°C ~ -2°C

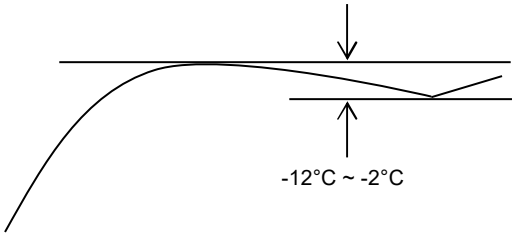

38. Sterilization | Initial setting: 65°C 10min

Set timer to perform sterilization.
① Set operating day & time. (Weekly timer format)
② Sterilization temp (55~75°C ❊ If use back-up heater, it is 65°C)
③ Operation time (Time to run sterilization when it reached setting temp 5min ~ 60min)

User shall set whether to use or not to use sterilization mode.

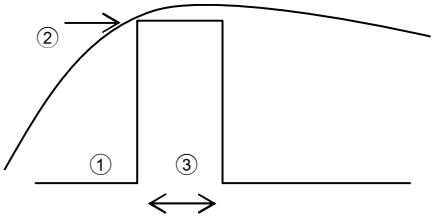

12.4.3.5 Service Setup

39. Pump maximum speed

Initial setting: Depend on model

Normally setting is not necessary.
Please adjust when need to reduce the pump sound etc.
Besides that, it has Air Purge function.

When *Pump flow setting is Max. Duty, this duty set is the fix pump duty run during room side operation.

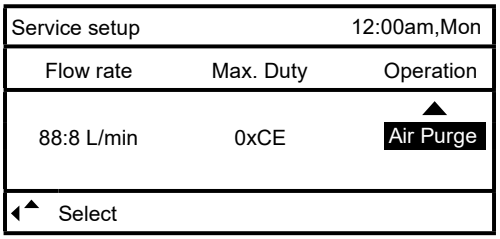

40. Pump down

Operate pump down operation

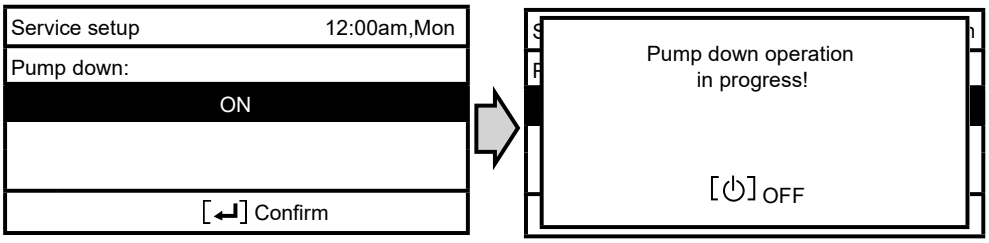

41. Dry concrete

Operate concrete curing operation.
Select Edit, set temp for every stage (1~99 1 is for 1 day).
Setting range is 25~55°C

When it is turned ON, dry concrete starts.

When it is 2 zone, it dries both zones.

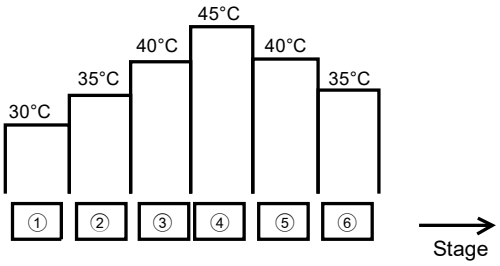

42. Service contact

Able to set name & tel no. of contact person when there is breakdown etc. or client has trouble. (2 items)

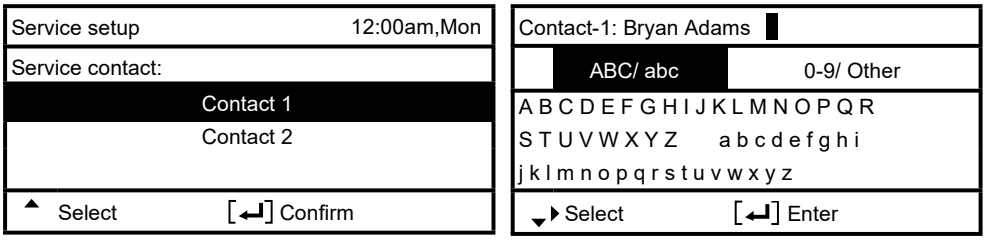

12.4.3.6 Remote Control Setup

43. RC selection

Initial setting : Single

Set to "Single" when only one remote controller is installed.
Set to "Dual" when two remote controllers are installed.

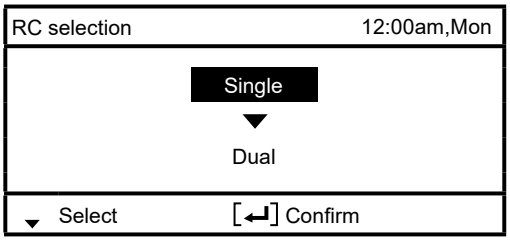

12.5 Service and Maintenance

If forget Password and cannot operate remote controller

Press ⮌ + ↵ + ▶ for 5 sec.
Password unlock screen appears, press Confirm and it shall reset.
Password will become 0000. Please reset it again.
(NOTE) Only display when it is locked by password.

12.5.1 Maintenance Menu

Setting method of Maintenance menu

Maintenance menu	12:00am,Mon
Actuator check	
Test mode	
Sensor setup	
Reset password	
▼ Select	[↵] Confirm

Press ⮌ + ↵ + ▶ for 5 sec.

Items that can be set

① Actuator check (Manual ON/OFF all functional parts)
(NOTE) As there is no protection action, please be careful not to cause any error when operating each part (do not turn on pump when there is no water etc.)

② Test mode (Test run)
Normally it is not used.

③ Sensor setup (offset gap of detected temp of each sensor within -2~2°C range)
(NOTE) Please use only when sensor is deviated.
It affects temperature control.

④ Reset password (Reset password)

12.5.2 Custom Menu

Setting method of Custom menu

Custom menu	12:00am,Mon
Cool mode	
Back-up heater	
Reset energy monitor	
Reset operation history	
▼ Select	[↵] Confirm

Please press ☰ + ▼ + ◀ for 10 sec.

Items that can be set

① Cool mode (Set With/Without Cooling function) Default is without
(NOTE) As with/without Cool mode may affect electricity application, please be careful and do not simply change it.
In Cool mode, please be careful if piping is not insulated properly, dew may form on pipe and water may drip on the floor and damage the floor.

② Backup heater (Use/Do not use Backup heater)
(NOTE) It is different from to use/not to use backup heater set by client. When this setting is used, heater power on due to protection against frost will be disabled. (Please use this setting when it is required by utility company.)
By using this setting, it cannot defrost due to low Heating's setting temp and operation may stop (H75)
Please set under the responsibility of installer.
When it stops frequently, it may be due to insufficient circulation flow rate, setting temp of heating is too low etc.

③ Reset energy monitor (delete memory of Energy monitor)
Please use when moving house and handover the unit.

④ Reset operation history (delete memory of operation history)
Please use when moving house and handover the unit.

12.5.3 Check Water Pressure from Remote Controller

1. Press SW and scroll to "System check".
2. Press and scroll to "System information".
3. Press and search for "Water pressure".

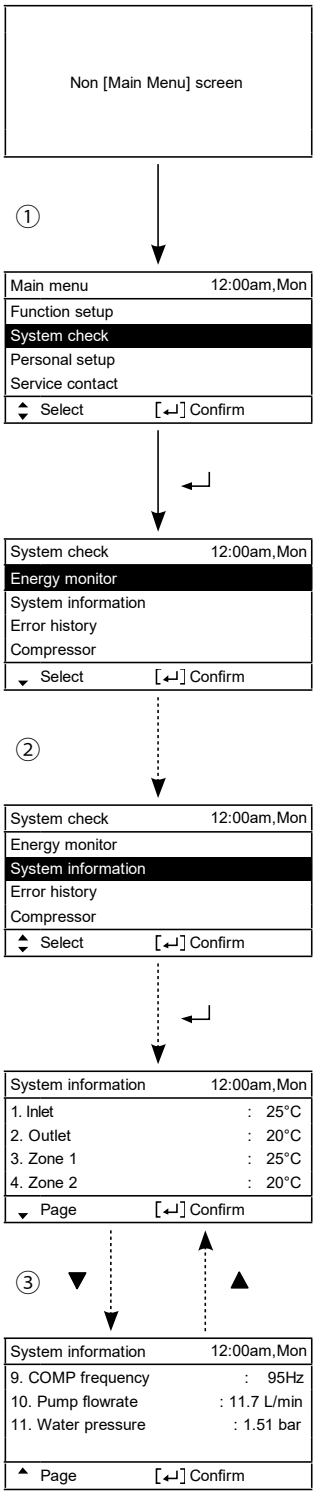

Screens shown are for illustration purposes only.

13. Installation and Servicing Heat Pump using R32

13.1 About R32 Refrigerant

For heat pump refrigerants such as R410A, the refrigerants were collected back in order to prevent their air dissipation, to curbe the global warming impact, in case they were released into the atmosphere. In the “4th Environmental Basic Plan”, 80% reduction of greenhouse gas emissions by 2050 is required, and due to this requirement, further reduction in the emission of high greenhouse effect gas, such as CFCs, is required. Therefore, the conversion of heat pump refrigerant into the ones who has smaller greenhouse effect, even if it is dissipated into the atmosphere, became our responsibility.

Nevertheless, in case of heat pump refrigerant, it would be the best if there is a refrigerant which has smaller impact on global warming, but ensures good energy efficiency and performance, and is safe; however, there is no such refrigerant which satisfies all these conditions. As a result, we have been considering the practical usage, within the safety frame-work, of R32 refrigerant which has short lifetime in the atmosphere, and has smaller effect of global warming, but is slightly flammable.

In 2004, due to the revision of heat pump safety standards by the International Electro-safety Commission (IEC), the safety standards of heat pump using slightly flammable refrigerant was issued. In 2010, the regulations of American Society of Heating, Refrigerating and Air-Conditioning Engineers in the United States (ANSI/ASHRAE34) was issued adopting the grades for refrigerants which are difficult to inflame due to their slow burning rates, and as a result have smaller damages in cases of fire. The burning rate of R32 is lower by 10cm / per second, and safety standardization for various usage is now being processed.

13.2 Characteristics of R32 Refrigerant

1. Chemical Characteristics

R32 is one of the refrigerants used in R410A, has almost no toxicity, and chemically stable compound formed by hydrogen, carbon and fluorine.

R32 has short lifetime of 4 to 9 years in case of being released into the atmosphere; therefore, it has smaller greenhouse gas effect but has slight inflammability because of the large proportion of hydrogen.

Chemical Characteristic Table of R32, R410A and R22.

	R32	R410A	R22
Chemical Formula	CH2F2	CH2F2 / CHF2CF3	CHCLF2
Composition (mixture ratio wt.%)	Single Composition	R32 / R125A (50 / 50 wt.%)	Single Composition
Boiling Point (°C)	-51.7	-51.5	-40.8
Pressure (physical) *1	3.14	3.07	1.94
Capacity (physical) *2	160	141	100
COP (physical) *3	95	91	100
Ozone Depletion Potential (ODP)	0	0	0.055
Global Warming Potential (GWP) *4	675	2090	1810
Inflammability *5	Slightly Inflammable (A2L)	Non-inflammable (A1)	Non-inflammable (A1)
Toxicity	None	None	None

*1：Physical property of temperature condition 50°C
*2：Relative value of temperature condition 0/50°C, providing R22=100
*3：Te/Tc/SC/SH=5/50/3/0°C
*4：GWP=Global Warming Potential, each figure is based on “4th IPCC4 Report”
*5：Based on ANSI / ASHRAE std. 34-2010

2. Characteristic of Pressure

As shown in Table 2, R32 does not have much difference in vapor pressure at the same refrigerant temperature comparing to R410A, but comparing to R22, it is higher at 1.6 times more. Thus, the same as in case of R410A, it is necessary to do installation and service using high-pressure tools and components.

Table 2. Saturated vapor pressure comparison table

(Unit: MPa)

Temperature	Refrigerant		
	R32	R410A	R22
-20	0.30	0.30	0.14
0	0.71	0.70	0.40
20	1.37	1.35	0.81
40	2.38	2.32	1.43
60	3.84	3.73	2.33
65	4.29	4.17	2.60

Reference： Thermal properties table of Japan Society of Refrigerating and Air Conditioning Engineers (60, 65°C)
NIST REFPROP V8.0 (-20 ~ 40°C)

13.3 Refrigerant piping installation • Tools used in services

13.3.1 Required Tools

R32 refrigerant heat pump use the common parts as R410A heat pump for two-way valves and three-way valves (diameters of service ports); thus, they maintain commonality in the maintenance of the compressive strength, the size of pipe flaring, and the size of flare nuts as R410A. Therefore, for refrigerant pipe installation and services, you can use tools for R410A.

However, mixing of refrigerants is not allowed, so that you have to separate the cylinders for the recovery of refrigerants.

Tools used for installation • relocation • replacement of heat pump units

Works	R32	R410A	R22
Flaring	Flare tools for R410A (clutch type)		Flare tools for R22 (clutch type)
Connection of pipes	Torque wrench (diameter 1/4 3/8)		
	Torque wrench (diameter 1/2 5/8) *1		Toque wrench (diameter 1/2 5/8)
Manifold gauge charging hose	R32 & R410A Common (As at November 2013)		R22 Only
Air purging	Vacuum pump + Reducer / expander		Vacuum pump
Gas leakage test	Detection liquid or soup water, HFC detector		

*1. Nut diameters of 1/2 5/8, the size of torque wrench common with R410A
For other installation, you can use general tools such as screw drivers (+, -), metal saws, electric drills, long-nose pliers, hole core drills (ø70 or ø65), linen tape, levels, temperature gauges, clamp meters, electric knives, nippers, pipe cutters, reamers or scrapers, spring benders, (diameters 1/4 3/8 1/2 5/8), monkey wrenches, fixing wrenches (17 or 12 mm), feeler gauges, hexagon wrenches (4 mm), testers, megohm testers, etc.

Tools used for services

Works	R32	R410A	R22
Insertion of refrigerant	Digital scale for refrigerant charging, refrigerant cylinders, cylinder adopters and packing *a		
Recovery of refrigerant	Refrigerant recovery devices, refrigerant cylinders, manifold gauges, charging hoses *b		

*a. Use cylinder for each refrigerant, cylinder adopter and packing.
*b. Use refrigerant recovery cylinder separately for each refrigerant **(no mixture of refrigerant allowed)**. Please be aware that there are some refrigerant collection devices which do not have self-certification.

13.3.2 Tools for R32 (common with R410A)

1. Flare gauges
Use flare gauges when you perform flaring with flare tools (crutch type). Flare gauges are used to set the pipe ends at 0.5 ~ 1.5 mm from clump bars of flare tools.

Flare gauges

2. Flare tools (clutch type)
Flare tools have larger holes of clump bars in order to set the pipe end at 0 ~ 0.5 mm, and have stronger springs inside to ensure solid flaring torques. These flare tools can be used commonly for R22.

Flare tools (clutch type)

3. Torque wrenches (diameters 1/2, 5/8)
In order to strengthen the compressive strength, the diameters of wrenches change depending on the flare nut sizes.

Torque wrenches

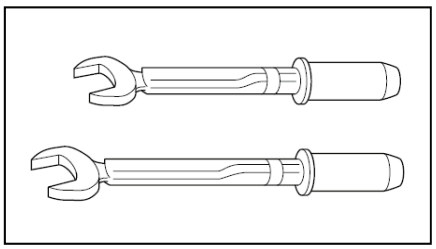

Differences in torque wrenches

	R32 (common R410A)	R22
1/2 (diameter × torque)	26 mm × 55 N•m (550 kgf•cm)	24 mm × 55 N•m (550 kgf•cm)
5/8 (diameter × torque)	29 mm × 65 N•m (650 kgf•cm)	27 mm × 65 N•m (650 kgf•cm)

4. Manifold gauges
R22 gauges cannot be used because of the high pressures.

Each port of manifold has different shapes in order to prevent inserting wrong refrigerant.
*However, the port shape for R410A and R32 is the same; therefore, attention need to be paid not to insert wrong refrigerant.

Differences in high/low pressure gauges

	R32 (common R410A)	R22
High pressure gauges (red)	-0.1 ~ 5.3 MPa -76 cmHg ~ 53 kgf / cm^2	-76 cmHg ~ 35 kgf / cm^2
Low pressure gauges (blue)	-0.1 ~ 3.8 MPa -76 cmHg ~ 38 kgf / cm^2	-76 cmHg ~ 17 kgf / cm^2

Difference in manifold port sizes

	R32 (common R410A)	R22
Port sizes	1/2 UNF20	7/16 UNF20

5. Charging hoses
The pressure resistance of charge hoses is increased. At the same time, the material is changed to HFC resistant, and the size of each manifold adopter is changed, as the port size of manifold gauge itself. Further, some hoses are with anti-gas pressure backflow valves placed near the adopters. (hoses with the valves recommended)

Manifold gauges / Charging hoses

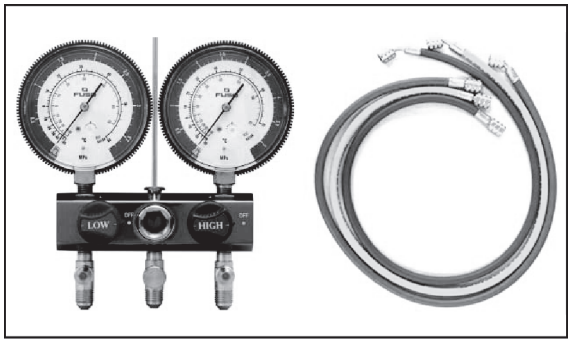

Differences in charging hoses

		R32 (common R410A)	R22
Pressure Resistance	Normal operation pressure	5.1 MPa (52 kgf / cm^2)	3.4 MPa (35 kgf / cm^2)
	Burst pressure	27.4 MPa (280 kgf / cm^2)	17.2 MPa (175 kgf / cm^2)
Material		HNBR rubber Internal nylon coating	NBR rubber

6. Vacuum pump and Vacuum pump adopter
When using a vacuum pump, it is necessary to set a solenoid valve in order to prevent backflow of vacuum pump oil into the charge hoses, and use a vacuum pump with oil backflow prevention function, or use the vacuum pump with vacuum pump adopter.
If vacuum pump oil（mineral oil-based）mixes with R410A (R32), it may cause damage to the machine.

Vacuum pump

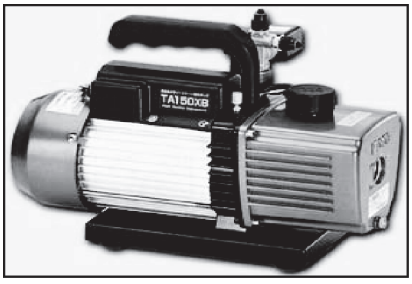

Vacuum pump adopter

7. HFC refrigerant_Electric gas leakage tester
R32 refrigerant is often used for other mixed refrigerant (R410A, R404A, R407C etc.). Therefore, the usage of existing HFC detectors is possible, but in order to detect more accurately, we recommend to use detectors specially set and adjusted for R32 detection.

HFC refrigerant_Electric gas leakage tester

8. Digital scale for refrigerant charging
R32 and R410A have high pressure level and their evaporation speed is high.
Thus, if you recover the refrigerant by cylinder charging method, the refrigerant evaporates within the weighing scale glass, which makes reading the scale difficult, rather than liquidating the refrigerant into the cylinder. (Charging cylinders for R22 have different pressure resistance, scale, connection port size; therefore, they are not usable) At the same time, the digital scale for refrigerant charging is strengthened by receiving the weight of the refrigerant cylinders with four pillars at the corners. The connection ports of charging hoses have two separate ports for R22 (7/16 UNF20) and R32/R410A (1/2 UNF20) therefore, they can be used for the insertion of the existing refrigerants.

Digital scale for refrigerant charging

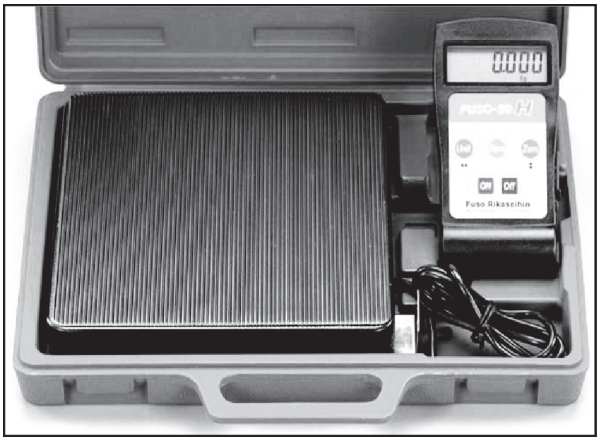

9. Refrigerant cylinders
Refrigerant cylinders for R410A are painted in pink, and the ones for R32 are painted in other colors that might subject to change according to the international standards. R32 is a single refrigerant, so that both liquid and gas insertion are possible. Additional charging is also possible.
(R410A is a mixed refrigerant, so only liquid insertion is possible)

Refrigerant cylinders

10. Connection ports of refrigerant cylinders and packing
Charging ports which fit to the charging hose connection port size (1/2 UNF20) is needed. At the same time, the packing has to be of HFC resistant materials.

Connection ports and packing

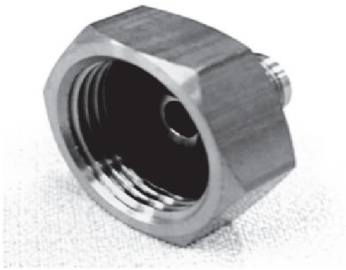

11. Tools used for refrigerant piping installations and services

	Tools for R410A	Common with R32	Possibility of usage for R22
1.	Pipe cutters, reamers or scrapers	○	○
2.	Flare tools (clutch type)	○	○
3.	Torque wrench (1/4, 3/8)	○	○
4.	Torque wrench (1/2, 5/8)	○	×
5.	Manifold gauges・charging hoses	○	×
6.	Vacuum pumps, vacuum pump adopters	○ Connection 5/16	○ Connection 1/4
7.	Electric gas leakage testers for HFC *1	○	△
8.	Digital scale for refrigerant charging	○	○
9.	HCF recovery devices (connection port 5/16) *2	○ Connection 5/16	○ Connection 1/4
10.	Refrigerant cylinders (pressure resistant: FC3)	Same specs ×	×
11.	Refrigerant cylinders (pink)	Other (colors that might subject to change according to the international standards).	×
12.	Refrigerant cylinder connection ports and packing	○	×
13.	Allen wrench (4 mm) Electric knives	○	○
*1	Those testers only for HCFC22 (R22), but not for HCF32 (R32) and HCF410A (R410A) cannot be for common use.		
*2	Recovery devices which are self-certified for each HCF type can be used.		

[Knowledge for the common usage of tools for R410A & R32]

- R410A and R32 machines use different compressor oils.
- If unregulated compressor oil gets mixed into, it may cause damage to the machine function.
- Careful pump down will ensure the recovery of compressor oil, and it will minimize the remaining amount of the oil in the manifold gauge and charging hose.
- If you only perform the recovery of refrigerant and not be able to perform pump down, <u>you have to dispose the compressor oil in the charging hose.</u>

[Precaution of repairing refrigerant cycle]

- In the brazing, open 2-way and 3-way valves, and make sure the refrigerant is completely recovered back and not remaining the system.
- When repairing outside, make sure no refrigerant is in the air, ensure good air flow, and perform the brazing.

[Inserting wrong refrigerant]

- It may cause “not cooling” and “not heating” customer claims because each component (expansion valve, compressor, PCB) of the refrigeration cycle is specially adjusted for R32.
- At the same time, it is not subject to product warranty, if wrong refrigerant was inserted into the system.

13.4 New installation, Relocation, Repairing of Refrigerant Cycle System The Procedures

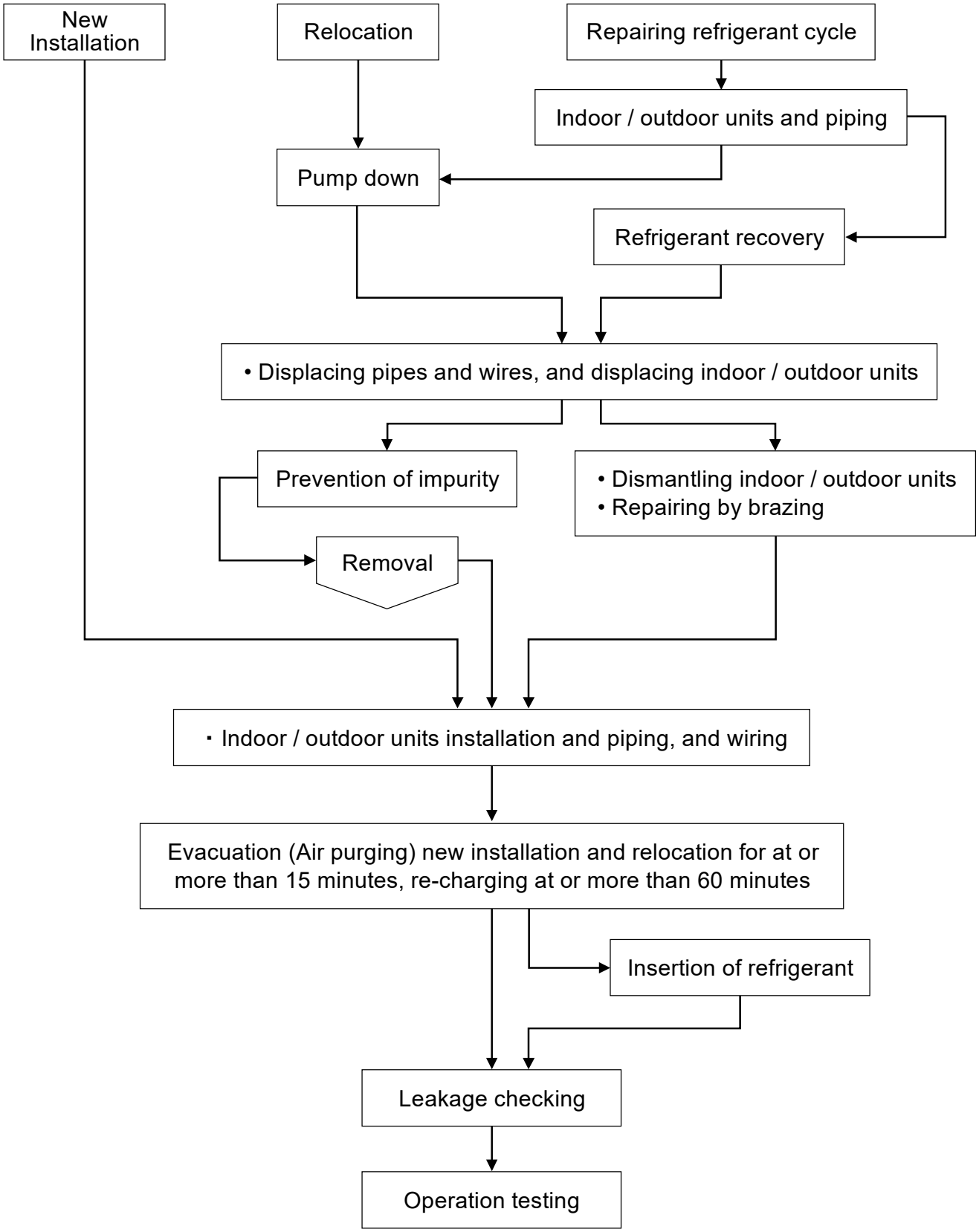

13.5 Piping installation of R32

13.5.1 Pipe materials used and flaring

Copper pipes are used for refrigerant piping. Pipes which comply with JIS Regulations need to be used. Room heat pump which use R410A and R32 have higher pressure; thus, using pipes which comply with the Regulations is important.
The pipe thickness is regulated by revised JIS B 8607 “Flaring and brazing fittings for refrigerant” and the pipe thickness for R410A, R32 is shown in the table.

Pipe thickness

O and OL materials		Thickness (mm)		
Diameter	Diameter (mm)	R410A	R32	R22
1/4	6.35	0.80		
3/8	9.52	0.80		
1/2	12.70	0.80		
5/8	15.88	1.00		

Caution

- For connection piping, use copper phosphate seamless pipes (1220T) as regulated in “JIS H 3300” and the pipe thickness is 0.8 mm.
- In the market, there are some pipes of 0.7 mm thickness, but do not use these pipes (0.8 mm thickness has to be strictly followed).
- It is recommended to use pipes whose adhesion amount of oil is at or less than 40 mg / 10 m.
  At the same time, do not use pipes with dent, de-shape, and color change (especially inside).

13.5.2 Processing and connection of pipes

For refrigerant pipe installation, be aware of moisture and dirt do not get into the pipes, and make sure of no refrigerant leakage.

◎ The procedure of flaring and precautions

a) Cutting of pipes：use pipe cutter and cut the pipe slowly not to de-shape the pipe.
b) Removal of burrs on the edge of pipe (reamer or scraper)
   If the condition of pipe edge after the deburring is no good or if burrs attaches on the flaring, it may cause refrigerant leakage. Turn the pipe end down and perform deburring carefully.
c) Insert the flare nut (use the nut which is a part of the CZ parts)
d) Flaring
   Ensure the cleanliness of clump bar and pipe, and perform flaring carefully.
   Use the existing flare tools or flare tools for R410A. Be aware that the sizes and dimensions of flaring is different in each flaring tool. If you use the existing flaring tools, use flaring gauge to measure the length of the flaring part.

Piping size (mm)	Dimensions “a” (mm) R22			Dimensions “a” (mm) R410A/R32		
	Flare tools		Flare tools for R410A	Flare tools		Flare tools for R410A
	Clutch type	Wing nut type	Clutch type	Clutch type	Wing nut type	Clutch type
6.35 (1/4")	0.5 ~ 1.0	1.0 ~ 1.5	0 ~ 0.5	1.0 ~ 1.5	1.5 ~ 2.0	0 ~ 0.5
9.52 (3/8")	0.5 ~ 1.0	1.0 ~ 1.5	0 ~ 0.5	1.0 ~ 1.5	1.5 ~ 2.0	0 ~ 0.5
12.70 (1/2")	0.5 ~ 1.0	1.5 ~ 2.0	0 ~ 0.5	1.0 ~ 1.5	2.0 ~ 2.5	0 ~ 0.5
15.88 (5/8")	0.5 ~ 1.0	1.5 ~ 2.0	0 ~ 0.5	1.0 ~ 1.5	2.0 ~ 2.5	0 ~ 0.5

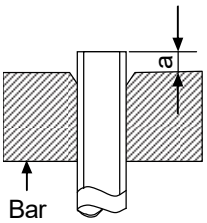

Nut outer diameter (mm)	
R22	R410A
	R32
17	17
22	22
24	26
27	29

13.6 Installation and Service

13.6.1 Air purge and gas leak test for new installation (using new refrigerant pipes) using vacuum pump

(From the point of view of global environment protection, do not release CFCs into the atmosphere during installation work)

1. Connect the charging hose of manifold gauge to the service port of 3-way valve (pushing insect pin).
2. Fully open the handle Lo of manifold gauge and operate vacuum pump.
   (If the needle of the low-pressure gauge reaches the vacuum immediately, check 1 procedure again)
3. Perform vacuuming 15 minutes or more, and make sure low pressure gauge reaches to −0.1 MPa (-76cmHg).
   When the vacuuming completes, fully open the handle Lo of manifold gauge and stop the operation of vacuum pump, and leave it for 1 ~ 2 minutes. Then, remove the connection side of the charging hose of vacuum pump adopter after checking the needle of manifold gauge does not turn back.
4. Open the stem of 2-way valve to 90° in anti-clock wise, and close the 2-way valve after 10 seconds, and perform gas leakage test.
5. Remove the charge hose from the service port of 3-way valve, and open the stems of 2-way and 3-way valves (open the valves to anti-clock wise carefully, do not use full strength to open)
6. Tighten the service port cap with torque wrench 18 N•m (1.8 kgf•m)
   Tighten the caps of 2-way and 3-way valves with torque wrench 18 N•m (1.8kg f•m)
7. After the tightening of each cap, check gas leakage around the cap.

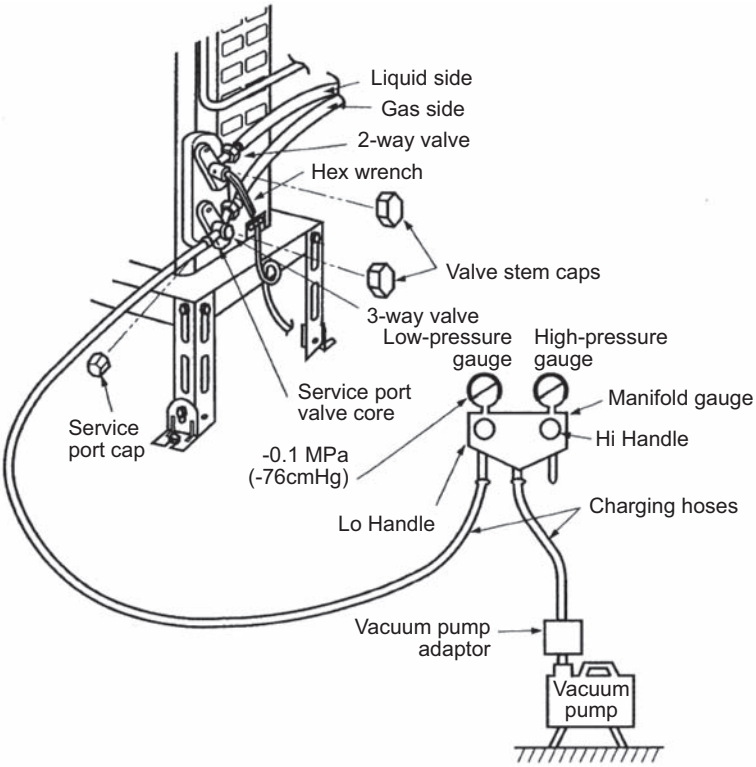

13.6.2 Process of refrigerant recovery

1. Connect the center charging hose of manifold gauge to the in-let side of recovery device.
2. Connect the valves of the discharge side of recovery device and liquid side of refrigerant cylinder with red hose (charging hose).
3. Connect the yellow float switch cable of the recovery device to the refrigerant cylinder.
4. Open the low pressure side valve of manifold gauge.
5. Slightly loosen the charging hose of in-let connecting side of recovery device and perform air purge.
6. Open the liquid valve of refrigerant cylinder and slightly loosen the charging hose in discharging side of recovery device, and perform air purge (the recovery cylinder needs slight inside pressure).
7. Insert electric plug of recovery device into electrical outlet (the fan operation starts).
8. Turn the valve 1 and 2 of recovery device to pressure equalization point.
9. After a few seconds, turn back the valve 1 and 2 to the original position.
10. Turn the switch of the recovery device to “ON”. (the compressor operation starts)
11. When the low pressure of manifold gauge is close to “0”, close the low pressure side valve, turn “OFF” the recovery device switch.
12. Remove the center charging hose of manifold gauge from the recovery device.

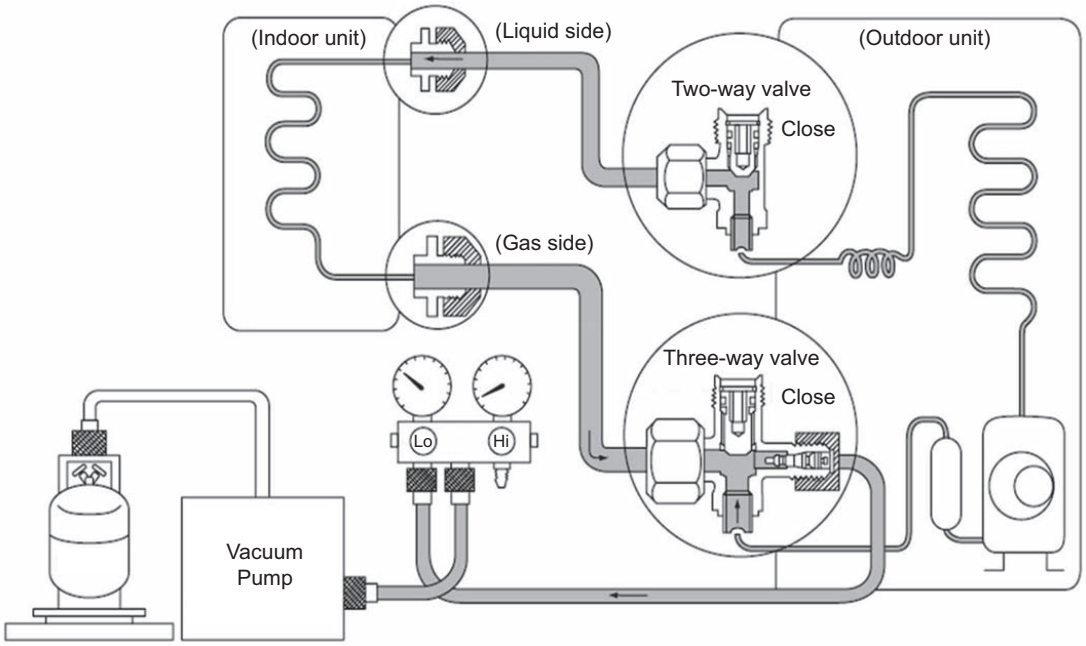

13.6.3 Replacement of heat pump units and evacuation (when re-using the existing pipes)

When replacing the heat pump units, you might use the existing pipes, but it is recommended to perform flaring again. In case of unit replacement, even if the unit is new refrigerant heat pump, if the refrigerant oil is different, it may cause problem. Further, when re-using the existing refrigerant pipes, it is recommended to evacuate the pipes as much as possible, due to the reason that much refrigerant oil may be attached on the surface of the pipes. If the pipes are used without evacuation, the remaining refrigerant oil may cause under-performance and abnormal refrigerant cycle caused by non-compatibility of those oils.

13.6.4 Inter-changeability of refrigerant

Do not operate heat pump units inserting wrong (or mixed) refrigerant (R22, R410A, R32). It may cause mal-function of the units, and at the same time, <u>may cause serious incident such as rupture of the refrigerant cycle.</u>

13.6.5 Re-insertion of refrigerant in service

When re-insertion is needed, follow the procedures to ensure the insertion of new refrigerant at correct amount.

1. Attach charging hose (blue) to the service port of the outdoor unit.
2. Attach charging hose (red) to the vacuum pump. Fully open the 2-way and 3-way valves or both 3 way valves.
3. Place the refrigerant cylinder on the digital scale for refrigerant charging and connect the charge hose (yellow) to the connection port of the vacuum pump and the digital scale. Leave the cylinder valve fully open.
4. Fully open the handles Lo and Hi of the manifold gauge, and switch on the vacuum pump, and then perform evacuation for at or more than one hour.
5. Confirm the compound gauge of -0.1 MPa (-76cmHg) and fully open the handles of Lo and Hi, and switch off the vacuum pump. Leave it for about 1 ~ 2 minutes and confirm the needle of the compound gauge does not turn back.
   Refer to the picture below to follow the procedures below.
6. Remove the charging hose (red) of the manifold gauge from the vacuum pump adopter.
7. After adjusting the digital scale to zero, open the cylinder valve and the valve Lo of the manifold gauge, and insert the refrigerant.
8. If it is not possible to insert the refrigerant at regulated amount at once, operate the cooling mode and gradually insert the refrigerant (recommended amount approx. 150 g / 1 time)
   *Do not insert much refrigerant at once.
9. Close the open/close valve and insert the refrigerant in the charging hose to the outdoor unit.
   *Perform this procedure during operating cooling operation. Close the stem of the two-way valve, and when the pressure of the manifold gauge becomes zero (0), quickly remove the charging hose (blue). Immediately open the 2-way valve, and stop the cooling operation.
10. Final checking • • • Confirm the 2-way and 3-way valves are fully open.
    Attach the caps of the service port and control valve, and then check the gas leakage around the caps.

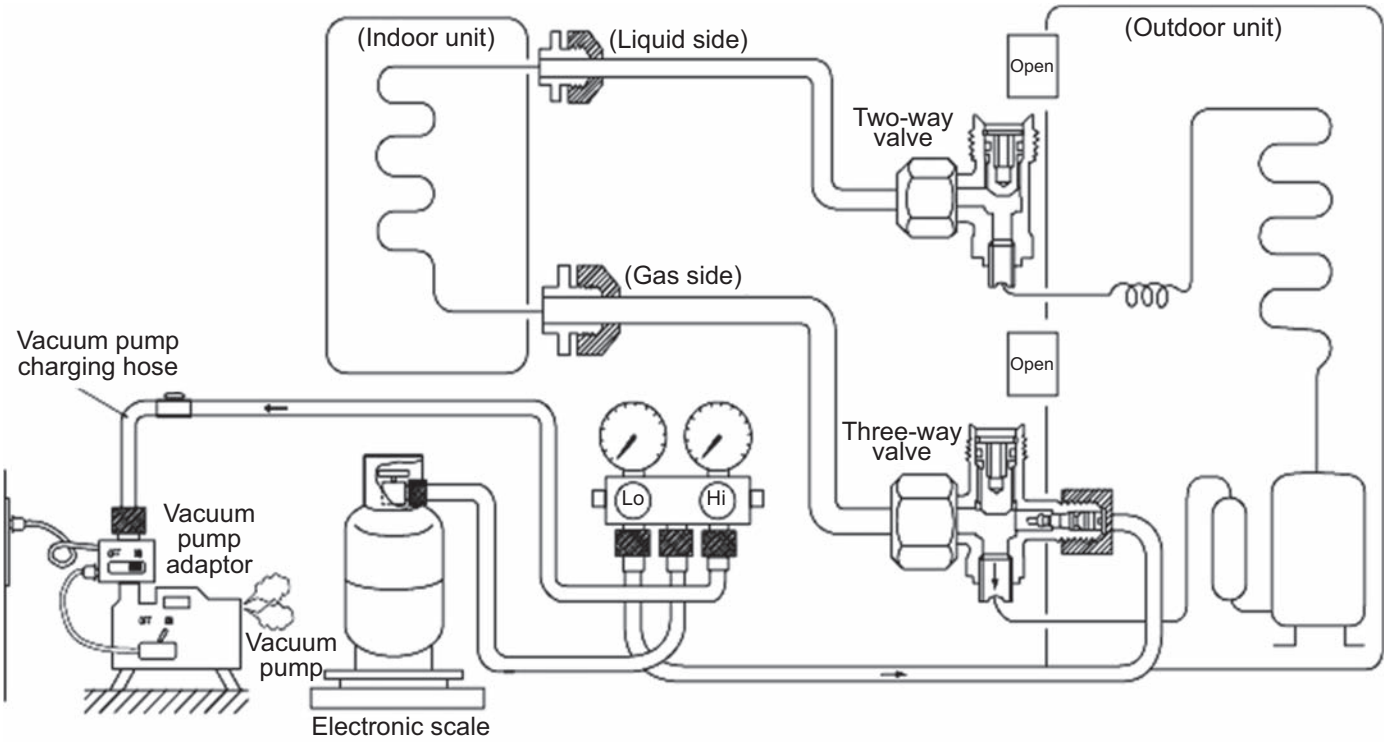

13.7 Repairing of refrigerant cycle / Brazing point

13.7.1 Preparation for repairing of refrigerant cycle / brazing

Brazing which is a technique needed for repairing refrigerant cycle requires advanced technique and experience, and this brazing procedure can only be performed by the workers who completed “Gas Welding Skill Training” regulated by the Occupational Safety and Health Act, and went through the training programs of refrigerant operations. Dismantling and re-connecting (assembling) refrigerant system requires working space, and the space has to ensure good air flow and fire prevention (water bucket and fire extinguisher). Moreover, the worker has to ensure the wearing of goggles, grabs, safety shoes, and long sleeve shirts, and be aware of work safety and attempt to prevent secondary defect (quality assurance of products). For brazing the indoor / outdoor unit structural components (heat exchangers, compressors, expansion valves, four-way valve blocks), after the recovery of all refrigerant, confirm that no refrigerant remains in the system, and fully open the 2-way and 3-way valves. When the brazing is conducted outside, check and make sure no refrigerant is contained in the air (be careful with vaporized refrigerant). Furthermore, protect the compressor terminal with metal plates, and heat but use wet clothes to cool down (releasing the heat) the expansion valves, and four way valves (prevent destruction of parts). In brazing, it is important to pour the brazing material without melting the base metal based on capillary action principle. In case of holes and oxidizing caused by overheating, do not perform re-brazing or alteration but replace the parts.

13.7.2 Adjustment of vacuum pump pressure

1. Cylinder with adjustment handle
    1. Check and confirm the adjustment handle of the 1st pressure adjuster is loosen (anticlockwise). If cylinder valve is opened when the 1st gauge pressure adjust handle is closed, the 2nd gauge might get broken.

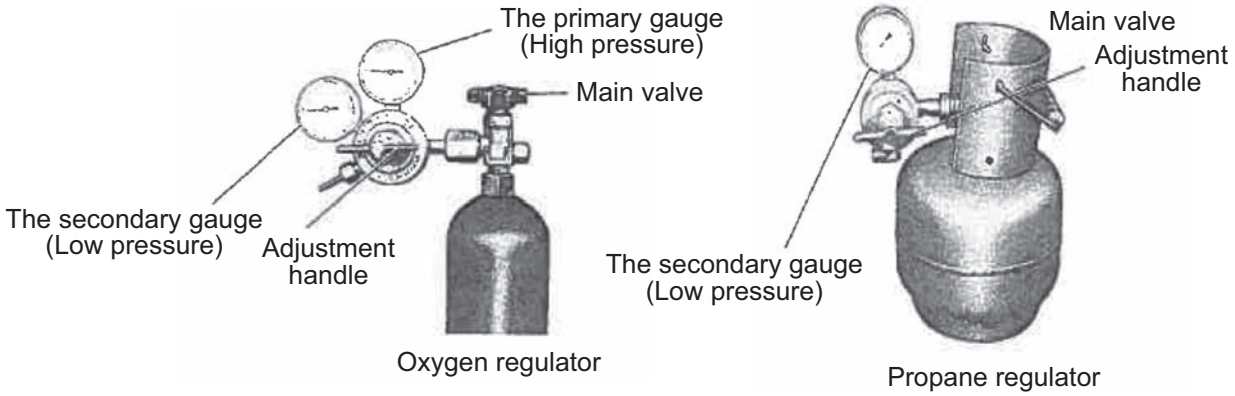

    2. Open the cylinder valve, and check the remaining amount with the first t side pressure gauge.
    3. Check the pressure of 2nd gauge and turn the adjustment handle to clock-wise direction to adjust the pressure.
        ◎ Oxygen 2nd side gauge pressure・・・・・・・・・・0.5 MPa (5.0 kgf / cm^2)
        ◎ Propane 2nd side gauge pressure・・・・・・・0.05 MPa (0.5 kgf / cm^2)

2. Cylinder without adjustment valve
   2nd side gauge pressure is adjusted by the adjuster.
   Check the both side valves of the torch and open the cylinder valve to check the remaining refrigerant in the cylinder.
   Caution: Do not attach oil component on the connection port of the adjuster.
   Especially, use an oxygen cylinder adjuster which is no oil substance type. Do not dismantle or repair the adjuster and pressure gauge.

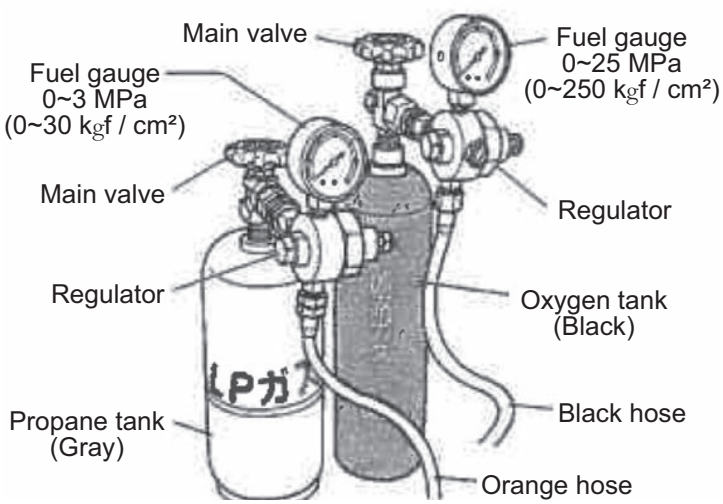

13.7.3 Checking of gas provision

Checking there is no fire around the torch, and then confirm the provision of gas.

1. Slightly open the “propane valve” of the torch, and make sure the gas comes out from the torch crater and then close the “propane valve”.
2. Slightly open the “oxygen valve” of the torch and make sure the gas comes out from the torch crater and then close the “oxygen valve”.
   Check there is no gas leakage around the hose connection.

13.7.4 Adjustment of flame

1. Slightly open the “propane valve” of the torch and lit with spark lighter.
   This moment, the flame is only by propane and the color is red.
2. Gradually open the “oxygen valve” of the torch to mix oxygen, and adjust the amount of propane and oxygen with the valve to make the flame suitable for brazing work.
   If the white core flame splits into two, the torch crater might be clogged. In this case, remove the crater from the torch and check.

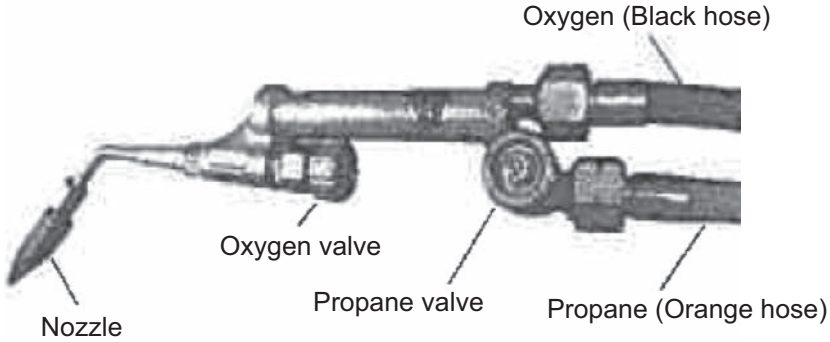

13.7.5 Types of flame

Types of flame change based on the proportion of propane and oxygen.

[Neutral Flame]

Perform brazing with this flame

(This is a flame when oxygen and propane are mixed at proper proportion, and has lesser effect on the brazed metals)

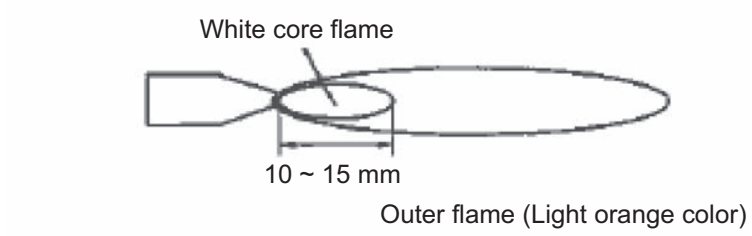

[Carbide Flame]

When propane is excessive, the flame has white color flame in between the white core flame and outer flame.
(This is due to the lack of oxygen and the proportion of unburned propane is excessive.
The black carbon created during the brazing work may contaminate the surface of the brazed metal).

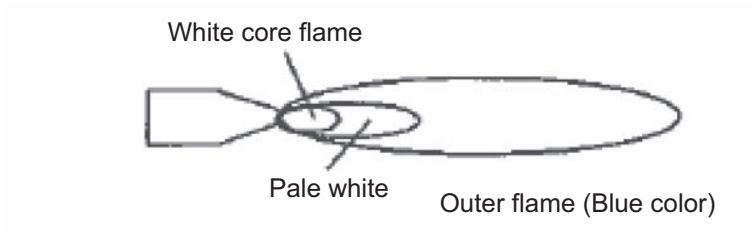

[Oxidizing Flame]

Oxygen is more compared to the neutral flame. Although the flame size is small, this has the highest flame heat. However, due to the excessive oxygen contained in the flame, the brazing point gets oxidized. (This flame may cause holes, due to the high heat. The pipe may get melt）

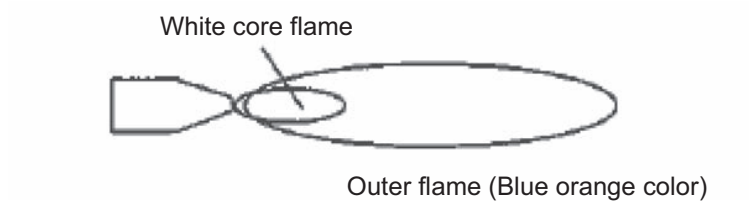

13.7.6 Closing the flame

[In case of short break]

1. Close the “propane valve” of the torch.
2. Close the “oxygen valve” of the torch.

[In case of finishing work]

1. As above, close the flame following the procedure of “In case of short break”.
2. Completely close the valves of oxygen and propane cylinders.
3. Release the remaining gas inside the hose by opening the “oxygen valve” and “propane valve” of the torch.

Confirm the 1st and 2nd side gauge pressures of “oxygen” and “propane” cylinder pressure adopter are “zero”.

13.7.7 Selection of brazing material

Use BAg brazing material (silver solder) to increase the welding performance.

Category	JIS Standard Number	Composition of ingredients (%)						Temperature (°C)			Tensile strength (Reference)		Characteristics and applications
		Ag	Cu	Zu	Cd	Ni	P	Solidus	Liquidus	Brazing temp	Kgf•cm²	Base material	
BAg	BAg • 1A	49.0 ~ 51.0	14.5 ~ 16.5	14.5 ~ 18.5	17.0 ~ 19.0	—	—	approx. 625	approx. 635	635 ~ 760	45.5	S20C	Liquidity is good at low temperature, it is preferable to a small junction of the gap in the universal form.
	BAg • 1	44.0 ~ 56.0	14.0 ~ 16.0	14.0 ~ 18.0	23.0 ~ 25.0	—	—	approx. 605	approx. 620	620 ~ 760	45.5	S20C	It has similar performance to the BAg • 1A, and suitable for every base material except the light weight metal.
	BAg • 2	34.0 ~ 36.0	25.0 ~ 27.0	19.0 ~ 23.0	17.0 ~ 19.0	—	—	approx. 605	approx. 700	700 ~ 845	45.5	S20C	It is a brazing filler metal in universal form, suitable for a slightly larger gap junction.
	BAg • 3	48.0 ~ 51.0	14.5 ~ 16.5	13.5 ~ 17.5	15.0 ~ 17.0	2.5 ~ 3.5	—	approx. 630	approx. 690	690 ~ 815	35 ~ 70	SS ~ SUS	It has good corrosion resistance in stainless steel-based brazing, suitable for brazing tungsten carbide, aluminum bronze and copper.
BCuP	BCuP-2	—	remain	—	—	—	6.8 ~ 7.5	approx. 710	approx. 785	690 ~ 815	21 ~ 24.5	Cu	Good liquidity, suitable for brazing copper tube.
	BCuP-3	4.8 ~ 5.2	remain	—	—	—	5.8 ~ 6.7	approx. 645	approx. 815	720 ~ 815	21 ~ 24.5	Cu	Suitable for brazing when the joint spacing is not constant
	BCuP-5	14.5 ~ 15.5	remain	—	—	—	4.8 ~ 5.3	approx. 645	approx. 800	705 ~ 815	21 ~ 24.5	Cu	When brazing of copper and copper, it is used without a flux, but not possible for brazing basic materials

Caution
BCuP (phosphorus copper wax) is easy to react with sulfur, and makes a brittle compound water soluble, and causes gas leakage. In hot spring areas, use other brazing materials or paint the surface for protection.

13.7.8 Need of flux

Use flux to protect the base materials.

1. Remove impurity and oxide film on the metal base, and improve the flow of the brazing material.
2. Prevent oxidation of the metal surface in brazing.
3. Reduce the surface tension of the brazing material.

13.7.9 Need of nitrogen gas

In order to prevent oxidation in the pipe, perform the brazing operation in nitrogen gas flow.
Flow rate 0.05 m^3 / h, or pressure reducing valve at 0.02 MPa (0.2kgf / cm^2) below.

13.7.10 Checking of brazing (insert) points

1. No impurity on the brazing point
   If dirt or oil is attached on the brazing point, the brazing filler metal does not reach to junction, and it may cause poor welding.

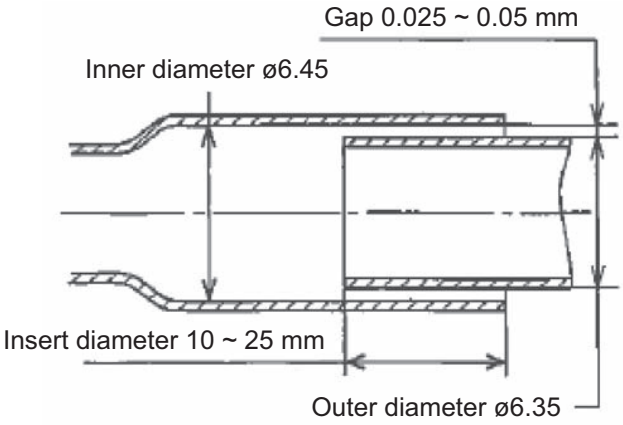

2. Adequate gap space in the brazing point
   The advantage of capillary current situation is used in brazing. If the gap space is too large, this phenomenon may not occur and it may cause poor welding because brazing filler metal does not flow to join the front part.

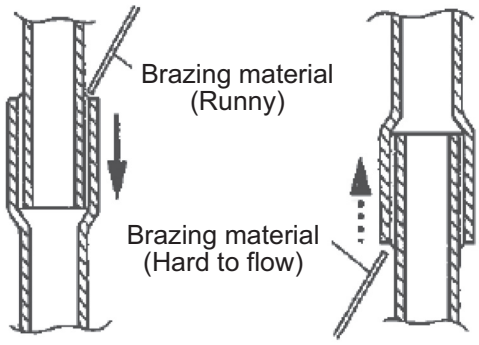

3. Appropriate size for insertion
   The guideline for pipe insertion dimensions is to three times the diameter of the base material, but you need to decide the insertion size in consideration of the clogging of the brazing material. Generally, for thin pipes, you need to increase the insert size, and for thick pipe vice versa.

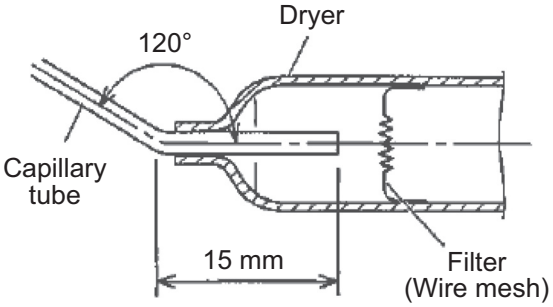

4. Brazing material to flow from top to bottom
   Brazing filler metal will easily flow to the connecting portion by capillary action.
   Further, by bending the brazing portion of [dryer side] of the capillary tube at 15 mm from the tube top to the angle of about 120°, you can prevent the damage of dryer inside and the clogging of brazing material caused by the excessive insertion of capillary tube.

13.7.11 Brazing and heating

1. Place the flame to a pipe which has more heat capacity in order to let the brazing material melt by the pipe heat. Heat the pipe up to the melting temperature of the brazing material, but when it is overheating, assess the temperature by pipe color in order not to melt the pipe.

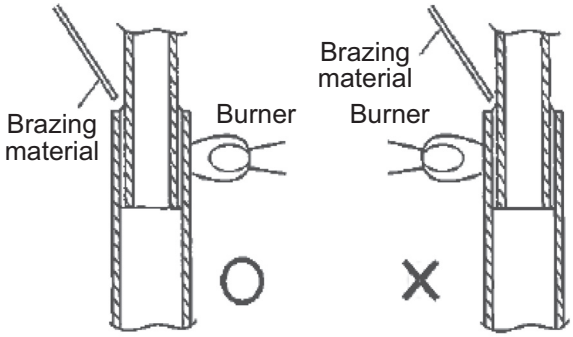

The pre-heating is to heat the base material until the melting temperature, and requires certain training to distinguish the color of the heated base material in order not to melt the material.
The color and temperature of copper tube

- Becoming red color • • • • • • • 480°C
- Dull red • • • • • • • 650°C
- Cherish red • • • • • • • 760°C
- Brightening cherish red • • • • • • • 870°C

(Reference)
Melting temperature of copper • • • • • • • Approx. 1083°C
Maximum temperature obtained in propane and oxygen • • • • • • • Approx. 1083°C
The important point is to heat the bonding part uniformly within a short period of time until reaching to the brazing temperature in the following manner.

2. Apply the flame on to the side with better heat transmission. If the pipe thickness is consistent, by heating like 30% iron and 70% copper, the copper pipe inside reaches to brazing temperature.
   Iron pipes have low heat transmission and only the part the flame is applied get high temperature, and this causes oxidization of the pipe. The flow of the brazing filler is affected negatively.

3. Apply the flame on to the side of larger heat capacity.
   When brazing a thin tubes such as capillary tube and dryer, etc., caution has to be taken to apply the flame to the dryer side (thick pipe side), in order to prevent burn out by the heat.

4. When brazing the compressor connection pipes (suction and discharge), remove the sound insulation plate and the fan, and place the compressor stand vertically (to prevent the leakage of compressor refrigerating machine oil), and apply the flame from the compressor body side.

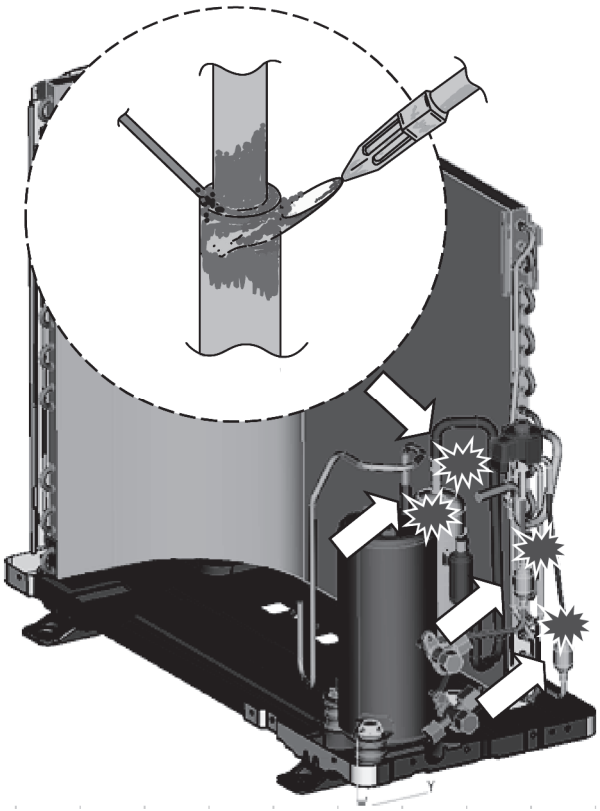

13.7.12 Terminologies of brazing

Pin holes → Small holes are generated on the surface of the brazing metal.
Wet temperature → Liquidus temperature at which the brazing material starts flowing out by heating, generally it is the liquidus-line temperature.
Blow holes → Hollows made by gas in the brazing material of brazing portion (gas reservoirs).
Pits → As a result of blow holes, small dents generated on the outside surface of welding.
Voids → The blazing material does not reach completely to the brazing part. It cannot be identified from outside.

14. Operation and Control

14.1 Basic Function

Inverter control, which equipped with a microcomputer in determining the most suitable operating mode as time passes, automatically adjusts output power for maximum comfort always. In order to achieve the suitable operating mode, the microcomputer maintains the set temperature by measuring the temperature of the environment and performing temperature shifting. The compressor at outdoor unit is operating following the frequency instructed by the microcomputer at indoor unit that judging the condition according to internal water setting temperature and water outlet temperature.

14.1.1 Internal Water Setting Temperature

Once the operation starts, control panel setting temperature will be taken as base value for temperature shifting processes. These shifting processes are depending on the Air-to-Water Heat pump settings and the operation environment. The final shifted value will be used as internal water setting temperature and it is updated continuously whenever the electrical power is supplied to the unit.

14.1.2 Heating Operation

14.1.2.1 Thermostat Control

- Compressor is OFF when Water Outlet Temperature – Internal Water Setting Temperature > 2°C for continuously 3 minutes.
- Compressor is ON after waiting for 3 minutes, if the Water Outlet Temperature – Water Inlet Temperature (temperature at thermostat OFF is triggered) <-3°C.

14.1.2.2 Thermostat Control (Outdoor Ambient Temperature)

Stops provide heating to room side during high outdoor ambient condition.
Control content:

- Heating operation and water pump will turn OFF when outdoor ambient temperature > outdoor thermo off temperature + 3°C.
  (Outdoor thermo off set temperature is set by control panel. Thermo off set temperature is between 5°C ~ 35°C)
- Heating operation will resume when Outdoor ambient temperature < Outdoor thermo OFF set temperature + 1°C.

14.1.2.3 Heat Mode Operation

Operation of heat pump provide heating capacity to room side by hot water through heating panel, floor heating or fan coil unit.

1. ways valve control:
   - 3 ways valve switch and fix to heating side.
2. Heat pump operates follow normal heating operation.
3. Back up heater operate follow normal operation.
4. 2 ways valve control:
   - 2 ways valve opens.

14.1.2.4 Compressor Maximum Frequency Control During Heating Operation

Purpose:- To ensure that the compressor does not directly operate at the maximum frequency from beginning.
Installer can activate this control by setting on remote control : “Efficiency” under “Heating control” in the Installer setup menu.

Start condition
When all of the below conditions achieved

- Remote control setting = Efficiency
- It is not test mode
- Compressor run time < 1 hour
- Present water outlet temperature - Water outlet set temperature ≥ -10°C
- Outdoor ambient ≥ -10°C

Under this control, heating operation frequency will be based on heating coefficient calculation.

Compressor maximum Hz = Heat mode zone limit max Hz X Coefficient

Time from start (minutes)	Below 20 minutes	Below 40 minutes	Below 60 minutes	Above 60 minutes
Coefficient	0.5	0.5 + (0.5/3)	0.5 + 2*(0.5/3)	1.0

The operating frequency will gradually increase when the capacity is deemed insufficient by referring to dRange value:-

- dRange = Current water outlet temperature - Water outlet set temperature
  dRange value is checked every 10 minutes.
- If current dRange < previous dRange, the new coefficient value will increase by 0.1.
  Maximum frequency after change is limited by Zone limit maximum Hz.

Stop condition
When any one of below conditions achieved

- Remote control setting = Comfort
- It is test mode
- Compressor run time ≥ 1 hour
- Present water outlet temperature - Water outlet set temperature < -10°C
- Outdoor ambient < -10°C

14.1.3 Cooling Operation

14.1.3.1 Thermostat Control

- Compressor is OFF when Water Outlet Temperature – Internal Water Setting Temperature > -1.5°C for continuously 3 minutes.
- Compressor is ON after waiting for 3 minutes, if the Water Outlet Temperature – Water Inlet Temperature (temperature at thermostat OFF is triggered) >3°C.

14.1.3.2 Cool Mode Operation

1. ways valve control:
   - 3 ways valve switch and fix to cooling side.
2. Heat pump operates follow normal cooling operation.
3. Room heater DOES NOT operate during cool mode.
4. 2 ways valve control:
   - 2 ways valve is closed.

14.1.4 Target Water Temperature Setting

14.1.4.1 Target Water Temperature Control of Standard System (Optional PCB not connected)

There are 2 types of temperature control selection which are Compensation and Direct.

- Temperature control type selection by installer:
  1 Compensation : Wlo, WHi, ODLo, ODHi can be set at installer menu.
  2 Direct : Direct Water Temperature Set
- Remote control setting by user:
  1 Compensation : Shift value ±5°C from the compensation curve
  2 Direct : Direct water temperature set change

*This setting only able to set when room sensor select as Water Temperature.
*Instead of water temperature, user will set target room temperature when room sensor select as Room Thermistor OR Internal Room Thermostat.

- Target water temperature is calculated as below condition.
  - Target water temperature = A (Base temperature) + B (shift temperature)

A (Base Temperature)	Compensation	Direct
	Value from the curve + User shift value set	Direct value from user setting

- B (shift temperature) value is depend on the room sensor selection at remote controller as below table:

B (Shift Temp.)	B shift value depend on the room sensor selection at remocon as table below
Sensor selection	
Water temperature	B = 0
External Room thermostat	B = 0
Internal Room thermostat & Room Thermistor	**Cool Mode:** B = 0 ; when Zone OFF or Zone Room Thermo OFF B = B = 1* (room set temp (R/C) – actual room temp) Max/Min Regulation of B: (Max = 5 ; Min = -5)
	Heat Mode: B = 0 ; when Zone OFF or Zone Room Thermo OFF B = follow Heating Room Temperature PI control logic

- Maximum/minimum regulation of Target Water Temperature

	Heating	**Cooling**
Max	55°C / 60°C*	20°C
Min	20°C	5°C

* Between outdoor ambient -10°C and -15°C, the water outlet temperature gradually decreases from 60°C to 55°C

<u>Compensation Type: (Operation under Heat Mode and Cool Mode)</u>

- The set temperature defines the parameters for the ambient (Outdoor temperature) dependent operation of the unit. The water temperature is determined automatically depending on the outdoor temperature. Default setting is the colder outdoor temperature will result in warmer water and vice versa. The user has the possibility to shift up and shift down the target water by remote control setting.

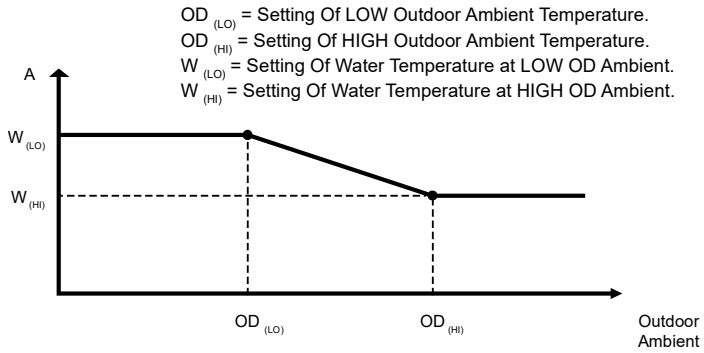

- Outdoor ambient is updated every 5 minutes when operation ON.
- Setting water outlet temperature always follow $W_{(LO)}$ or $W_{(HI)}$ whenever is higher if outdoor ambient sensor or indoor communication error happen.

However, when powerful mode is requested by remote control during heating mode, the higher value of HLo or Whi will be used for A calculation.

* There are 2 compensation curves (for heating and cooling). During heating mode, the heating curve is used and during cooling mode, the cooling curve is use.

- Compensation curve set shift value:

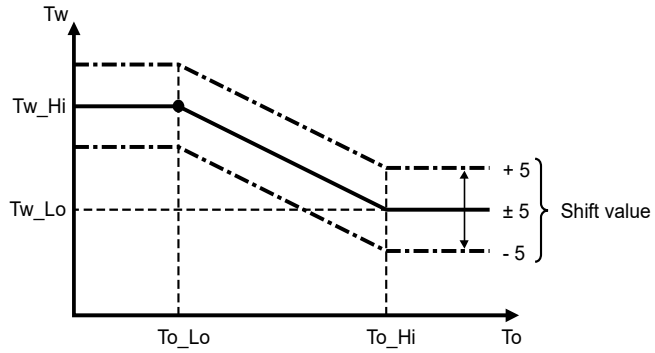

14.1.5 Target Water Temperature at Extension System (Optional PCB is connected)

Target water temperature is calculated as below.

- Heat Mode:
  - Target water temperature setting:
  - Max= 55°C / 60°C* Min= 20°C

* Between outdoor ambient -10°C and -15°C, the water outlet temperature gradually decreases from 60°C to 55°C

- When buffer tank selection is "YES:"
  Target water temperature = Target buffer tank temperature + [2°C]

- When buffer tank selection is "NO"
  - If both zone 1 and zone 2 is active
    Target Water Temperature = Higher zone target water temperature of Zone 1 and Zone 2.
  - If only one zone is active
    Target Water Temperature = Zone target water temperature of active zone.

- Cool mode:
  - Target water temperature setting:
    Max = 20°C Min= 5°C

- When buffer tank selection is "YES"
  - If both zone 1 and zone 2 active
    Target Water Temperature = Lower Zone Target Water Temperature of Zone 1 and Zone 2
  - If only one zone is active
    Target Water Temperature = Zone Target Water Temperature of active zone

- When buffer tank selection is "NO"
  - If both zone 1 and zone 2 active
    Target Water Temperature = Lower Zone Target Water Temperature of Zone 1 and Zone 2
  - If only one zone is active
    Target Water Temperature = Zone Target Water Temperature of active zone

14.1.6 Target Zone Water Temperature Control

Purpose:- To control zone mixing and zone pump according to the zone sensor temperature

14.1.6.1 Target Zone 1 water temperature setting control

- Start condition
  - Heating zone 1 is ON by remote control or Timer or Auto Mode **OR**
  - Cooling zone 1 is ON by remote control or Timer or Auto Mode.

- Cancel condition
  - Heating zone 1 is OFF by remote control or Timer or Auto mode **AND**
  - Cooling zone 1 is OFF by remote control or Timer or Auto mode.

- Target Zone 1 water temperature is calculated as below condition.
  - Target Zone 1 water temperature = A (Base temperature) + B (shift temperature)

A (Base Temperature)	Compensation	Direct
	Value from the curve + User shift value set	Direct value from user setting

* During heat mode and compensation select, if powerful mode is activated, higher value of WLo or WHi will be use as curve value.

- B (shift temperature) value is depend on the room sensor selection at remote controller as below table:

B (Shift Temp.)	B shift value depend on the room sensor selection at remocon as table below
Sensor selection	
Water temperature	B = 0
External Room thermostat	B = 0
Internal Room thermostat & Room Thermistor	**Cool Mode:** B = 0 ; when Zone OFF or Zone Room Thermo OFF B = B = 1* (room set temp (R/C) – actual room temp) Max/Min Regulation of B: (Max = 5 ; Min = -5)
	Heat Mode: B = 0 ; when Zone OFF or Zone Room Thermo OFF B = follow Heating Room Temperature PI control logic
Pool Function Selected	B = Delta value setting from remocon

* B = 0 regardless of which sensor selection, if SHP control bit is enable except Pool function select (maintain Pool "B" value)

** Pool function also can be select at Zone 1 when optional PCB is connected and Zone 1 system is select.

- Maximum/minimum regulation of Target Water Temperature.

	Heating	Cooling
Max	55°C / 60°C*	20°C
Min	20°C	5°C

* Between outdoor ambient -10°C and -15°C, the water outlet temperature gradually decreases from 60°C to 55°C

- Target Zone 1 Water Temperature (Heat mode) during SG ready control
  - If buffer tank selection is "NO" then following shift is carried out.
    - While digital input is "10" or "11" then,
      Final Target Zone 1 water temperature
      = Target Zone 1 water temperature* (SG ready % setting (remote control menu))%
  - If buffer tank selection is "YES"
    - No shift of Target Zone 1 Water Temperature. Target Buffer Tank Temperature will change accordingly.
      * Refer to "Buffer tank temperature control"

- Target Zone 1 Water Temperature (Cool mode) during SG ready control
  - Final Target Zone 1 water temperature = Target Zone 1 water temperature + SG Cool Setting

14.1.6.2 Target Zone 2 water temperature setting control

- Start condition
  - Heating zone 2 is ON by remote control or Timer or Auto Mode **OR**
  - Cooling zone 2 is ON by remote control or Timer or Auto Mode.

- Cancel condition
  - Heating zone 2 is OFF by remote control or Timer or Auto mode **AND**
  - Cooling zone 2 is OFF by remote control or Timer or Auto mode.

- Target Zone 2 water temperature is calculated as below condition.
  - Target Zone 2 water temperature = A (Base temperature) + B (shift temperature)

A (Base Temperature)	Compensation	Direct
	Value from the curve + User shift value set	Direct value from user setting

* During heat mode and compensation select, if powerful mode is activated, higher value of WLo or WHi will be use as curve value.

- B (shift temperature) value is depend on the room sensor selection at remote controller as below table:

B (Shift Temp.)	B shift value depend on the room sensor selection at remocon as table below
Sensor selection	
Water temperature	B = 0
External Room thermostat	B = 0
Internal Room thermostat & Room Thermistor	**Cool Mode:** B = 0 ; when Zone OFF or Zone Room Thermo OFF B = B = 1* (room set temp (R/C) – actual room temp) Max/Min Regulation of B: (Max = 5 ; Min = -5)
	Heat Mode: B = 0 ; when Zone OFF or Zone Room Thermo OFF B = follow Heating Room Temperature PI control logic
Pool Function Selected	B = Delta value setting from remocon

* B = 0 regardless of which sensor selection, if SHP control bit is enable except Pool function select (maintain Pool "B" value)

** Pool function also can be select at Zone 2 when optional PCB is connected and Zone 2 system is select.

- Maximum/minimum regulation of Target Water Temperature.

	Heating	Cooling
Max	55°C / 60°C*	20°C
Min	20°C	5°C

* Between outdoor ambient -10°C and -15°C, the water outlet temperature gradually decreases from 60°C to 55°C

- Target Zone 2 Water Temperature (Heat mode) during SG ready control
  - If buffer tank selection is "NO" then following shift is carried out.
    - While digital input is "10" or "11" then,
      Final Target Zone 2 water temperature
      = Target Zone 2 water temperature* (SG ready % setting (remote control menu))%
  - If buffer tank selection is "YES"
    - No shift of Target Zone 2 Water Temperature. Target Buffer Tank Temperature will change accordingly.
      * Refer to "Buffer tank temperature control"

- Target Zone 2 Water Temperature (Cool mode) during SG ready control
  - Final Target Zone 2 water temperature = Target Zone 2 water temperature + SG Cool Setting

14.1.6.3 Zone Temperature Control Contents

- During Standard System (Optional PCB not connected)
  - Only 1 zone temperature control is available
  - This zone room temperature is control by either one of the 4 room sensor (Room Th, Int/Ext Room Thermostat, Water temperature)
  - Target Zone Water Temperature is calculated based on selected temperature control type (Compensation or Direct) and selected room sensor. Target Water Temperature will set same as Target Zone Water Temperature
  - Target Water Temperature is the temperature for heat pump to operate refer to indoor water outlet sensor.
  - Heat pump and water pump OFF when ROOM Thermo OFF (Zone thermo OFF by Room Th or Room Thermostat).

* There will be no zone sensor connected to zone 1 (No zone sensor error), mixing valve and zone pump will not operate.

- During Extension System (Optional PCB connected)

* There will be no zone sensor connected to zone 1 (No zone sensor error), mixing valve and zone pump will not operate.
- During Extension System (Optional PCB connected)

- Buffer Tank connection select "NO" &
  - One zone system is select

    - This zone room temperature control by either one of the 4 room sensor (Room Th, Int/Ext Room Thermostat, Water temp.)
    - Target Zone Water Temperature calculate base on selected temperature control type (Compensation or Direct) and selected room sensor.
    - Target Water Temperature will set same as Target Zone Water Temperature
    - Target Water Temperature is a temperature for heat pump to operate refer to indoor water outlet sensor.
    - Heat pump and water pump OFF when ROOM Thermo OFF (Zone thermo OFF by Room Th or Room Thermostat).

* There will be no zone sensor connected to zone 1 (No zone sensor error), mixing valve and zone pump will not operate.

  - 2 zone system select
    - Each zone room temperature is control by each sensor which select from either one of the 4 room sensor
    - Target Zone 1 & 2 Water Temperature is calculated based on selected temperature control type (Compensation or Direct) and selected room sensor.
      * Zone Mixing Valve & Zone pump will operate to achieve Target Zone Water Temperature which refer to zone sensor.
      * Zone Sensor will detect if zone sensor is open or short.
    - Target Water Temperature will set same as the active & higher zone water temperature setting. (When cooling mode, lower zone water temp setting)
    - Target Water Temperature is the temperature for heat pump to operate refer to indoor water outlet sensor.
    - Heat pump and water pump OFF when ROOM Thermo OFF (Both Zone thermo OFF by Room Th or Room Thermostat).

- Buffer Tank Connection select "YES" &
  - 1 zone system or 2 zone system select
    - Each zone control by each sensor which select from either one of the 4 room sensor
    - Target Zone 1 & 2 Water Temperature calculate base on selected temperature control type (Compensation or Direct) and selected room sensor. Each zone have their own Target Zone Water Temperature.
      * Zone Mixing Valve & Zone pump will operate to achieve each Target Zone Water Temperature which refer to zone sensor
      * Zone Sensor will detect if zone sensor is open or short.
    - Target Buffer Tank Temperature will be set as active & higher zone water temperature setting + Buffer Delta T. (Heating) Target Buffer Tank Temperature will be set as active & lower zone water temperature setting (Cooling).
    - Target Water Temperature will set as Target Buffer Tank Temperature + [2°C] (Heating) Target Water Temperature will set as Lower or Active Target Zone Water Temp. + [-3°C] (Cooling)
    - Target Water Temperature is a temperature for heat pump to operate refer to indoor water outlet sensor.
    - Heat pump and water pump OFF when ROOM thermo OFF
      - Heat mode: ROOM thermo OFF (Buffer Tank Temperature > Target Buffer Tank + [0°C]
      - Cool mode: ROOM Thermo OFF (Both Zone thermo OFF by Room Th or Room Thermostat)

14.1.7 Auto Mode Operation

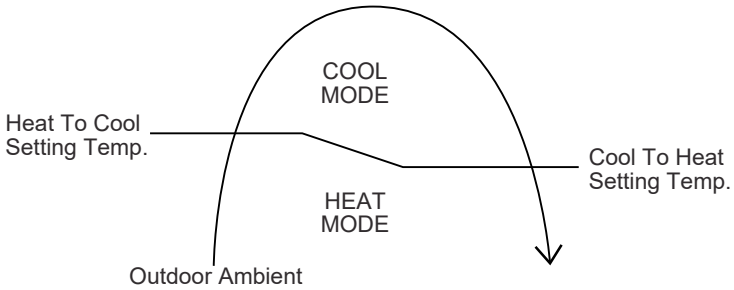

- Control details:
  - To enable the unit to operate either heat or cool mode automatically, heat to cool set temperature and cool to heat set temperature can be set by control panel.
  - Automatic operation is judged based on control panel setting temperature and outdoor ambient temperature.

  * Minimum setting of heat to cool set temperature is 1°C higher than cool to heat set temperature.

- Judgement control:
  - If outdoor ambient temperature < Heat to Cool Set Temperature, unit will operate in Heat Mode or else the unit will operate in Cool Mode.
  - If current operation is Cool mode, outdoor ambient temperature > Cool to Heat Temperature, unit will maintain Cool mode operation or else the unit will operate Heat mode.
  - If current operation is Heat mode, outdoor ambient temperature >Heat to Cool Temperature, unit will maintain Heat mode operation or else the unit will operate Cool mode.
  - Every 60 minutes the outdoor ambient temperature is judged.
  - When Auto + Tank mode is selected, operation mode switching is judged by both outdoor ambient temperature and indoor air temperature.

14.1.8 Auto Cooling Mode Operation Limit

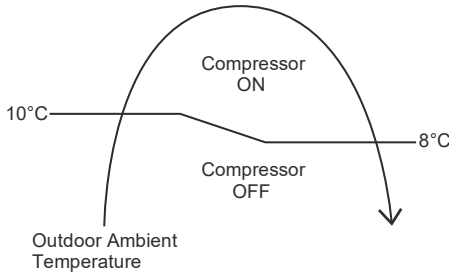

- Auto Mode Cooling Only operation will start once the outdoor ambient temperature reaches 10°C and compressor will continue to run until the outdoor ambient temperature drops to 8°C.
- Due to this limitation,
  If Heat to Cool temperature is set lower than 10°C, the compressor will not operates until the outdoor ambient temperature reaches 10°C or higher.

14.1.9 Tank Mode Operation

- 3 ways valve direction
  - 3 ways valve switch to tank side during Tank Thermo ON condition. Switch 3 ways valve to room side when tank achieve Tank Thermo OFF temperature.

- Tank Thermo ON/OFF Characteristic

  Tank Thermo OFF
  Case 1: <u>Internal Tank Heater is select and Tank Heater ON</u>
  - Tank temperature > Tank Set Temperature continuously for 15 seconds. **OR**
  - Water outlet >75°C
- Case 2: <u>Tank Heater OFF OR External Heater is select</u>
  - When heat pump OFF due to water thermos & Tank temperature > Tank water set temperature for continuously 20 seconds. **OR**
  - Tank temperature > Tank set temperature + 1°C for continuously 20 seconds.

Tank Thermo ON
Case 1: Tank Heater ON (Internal Tank Heater)
- Tank temperature < Tank set temperature + R/C (Tank re-heat temperature)

Case 2: Tank Heater OFF (Internal Tank Heater)
- Tank temperature < Tank water set temperature + R/C (Tank re-heat temperature)

* When tank thermo ON, water pump will ON for 3 minutes then only heat pump turn ON.
* Tank water set temperature = tank set temperature or 52°C whichever lower.

- 2 ways valve close
- Heat pump Thermostat Characteristic
  - Heat pump Water Outlet set temperature is set to below table:

Outdoor ambient temperature	Heat pump target water outlet temperature
< -10°C	56°C
> -10°C	59°C

Characteristic of heat pump thermos ON/OFF under tank mode condition:

Water Outlet Thermo Condition
- Heat pump thermos OFF temperature:
  1. Heat pump thermo OFF temperature = Target Water outlet temperature + (1°C)
  2. Water outlet temperature > heat pump thermo OFF temperature for continuously 3 minutes, heat pump OFF but water pump continue ON.

- Heat pump thermo ON temperature
  1. Heat pump thermo ON temperature = water inlet during thermo OFF time + [-3°C]
  2. When water outlet temperature < heat pump thermo ON temperature, heat pump ON.

Water inlet thermo protection condition
- Heat pump thermo OFF temperature:
  1. Water inlet temperature > [60°C/55°C] for continuously 30 seconds, heat pump OFF, water pump continue ON.

- Heat pump thermo ON temperature:
  1. Heat pump thermos ON temp = water inlet temperature < [60°C/55°C].

Outdoor ambient temperature	Water inlet temperature
< -10°C	55°C
> -10°C	60°C

Thermo ON/OFF for Heat Pump in Tank Operation:

When tank temperature achieve heat pump OFF condition, refer below condition:
Conditon 1 : Tank Heater ON (Internal Tank Heater)
- Heat pump will turn OFF, water pump continue ON and room heater will continue ON if tank temperature below tank heater thermo ON condition. 3 ways valve will only switch to room side after tank temperature reach tank heater thermo OFF condition.

Conditon 2 : Tank Heater OFF (Internal Tank Heater)
- If tank temperature achieve tank thermo OFF, heat pump turn OFF, water pump turn OFF, room heater OFF and 3 ways valve switch to room side.

When tank temperature achieve heat pump ON condition, water pump ON, heat pump ON and room heater turn OFF.

Heat pump OFF condition at Tank Mode
- Tank temperature > tank water set temperature continuously for 20 seconds after heat pump thermos OFF due to water thermo. (Heat pump turn OFF but water pump continue ON and room heater turn ON to achieve tank set temperature) **OR**
- Tank temperature > tank set temperature + [1°C] for continuously 20 seconds. (Heat pump OFF, water pump OFF, room heater OFF and 3 ways valve switch to room side)

Heat pump ON condition at Tank Mode

- Tank temperature < tank water set temperature + R/C setting (Tank re-heat temp) (Water pump turn ON OR continue ON, heat pump ON and 3 ways valve switch to tank side or maintain at tank side)

Tank heater control

- Internal heater only operates to tank side if Tank heater ON and backup heater is enable.

Internal heater turn ON condition:

- Tank temperature < tank set temperature **AND**
- Heat pump thermos OFF **AND**
- 20 minutes from previous heater off **AND**
- Internal tank heater selects USE from control panel.

Internal heater turn OFF condition:

- Tank temperature > tank set temperature for continuously 15 seconds **OR**
- Heat pump thermo ON **OR**
- Mode change or operation is off by control panel.

14.1.10 Heat + Tank Mode Operation

1. 3 ways valve control:
   - 3 ways valve switch to room side during room heat-up interval and switch to tank side during tank heat-up interval. Both modes will switch alternately. Tank mode is the initial running mode of Heat + Tank mode.

2. Heat pump operation control:
   - During room heat-up interval
     - Follow normal heating operation.
       Switching to tank side depends to below cases:
       Case 1:
       [Previous switch from tank interval to room interval due to thermo OFF]
     - Switch to tank heat-up interval when Tank temp < Tank thermos ON temp (Room heat-up interval ends)
       Case 2:
       [If heating operation at room side is less than 30 minutes and switch to tank side 3 times consecutively]
     - Maintain at room heat-up interval regardless of the tank temperature. Switch to tank heat-up interval only when (Room Interval Timer is complete **OR** Room heat pump thermo OFF) **AND** Tank temperature < Tank thermo ON temperature.
       Case 3:
       [Previous switch from tank interval to room interval due to tank interval timer is complete]
     - Maintain at room heat-up interval regardless of the tank temperature. Switch to tank heat-up interval only when (Room Interval Timer is complete **OR** Room heat pump thermo OFF) **AND** tank temperature < Tank thermo ON temperature.
   - During Tank heat-up interval
     - Tank interval is the first mode running when heat + tank mode is select.
     - Switch to room interval only when tank achieve tank thermo OFF **OR** tank heat-up interval timer is complete.
     - Heat pump operates according to normal tank mode operation.

3. Room heater control:
   - During heating heat-up interval
     - Follow normal room heater control operation.

4. Tank heater control:
   - During heating heat-up interval
     - Internal tank heater will not function under heating heat-up interval.
   - During tank heat-up interval
     - Internal tank heater will turn ON after heat pump thermo off to boil tank temperature to tank set temperature.
   - 2 ways valve control is open
   - Indoor water pump control:
     - Indoor water pump always turn ON if room heat pump thermo ON **OR** Tank thermo ON.

14.1.11 Cool + Tank Mode Operation

1 3 ways valve control:
   - 3 ways valve switch to room side during room cooling interval and switch to tank side during tank heat-up interval. Both mode will switch alternately. Tank mode is the initial mode of cool + tank mode.

2 Heat pump operation control:
   - During room heat-up interval
     - Follow normal cooling operation.
       Switching to tank side depends to below cases:
       Case 1:
       [Previous switch from tank interval to room interval due to thermo OFF]
     - Switch to tank heat-up interval when Tank temperature < Tank Thermo ON temperature (Room interval will ends)
       Case 2:
       [If cooling operation at room side is less than 30 minutes and switch to tank side for 3 times consecutively]
     - Maintain at room cooling interval regardless of the tank temperature. Switch to tank heat-up interval only when (Room Interval Timer is complete **OR** Room heat pump thermo OFF) **AND** Tank temperature < Tank thermo ON temperature.
       Case 3:
       [Previous switch from tank interval to room interval is due to tank interval timer is complete]
     - Maintain at room cooling interval regardless of the tank temperature. Switch to tank heat-up interval only when (Room Interval Timer is complete **OR** Room heat pump thermo OFF) **AND** tank temperature < Tank thermo ON temperature.

       *Tank Thermo ON temperature:

Internal Tank Heater select USE	<Tank set temperature + R/C setting (Tank re-heat temperature)
Others	<Tank water set temperature + R/C setting (Tank re-heat temperature)

   - During Tank heat-up interval
     - Tank interval is the first mode running when the cool + tank mode is select.
     - Switch to room interval only when tank achieve tank thermo OFF **OR** tank heat-up interval timer is complete.
     - Heat pump operates according to normal tank mode operation.

3 Room heater control:
   - During room cooling interval
     - Room heater is OFF and not operates.

4 Tank heater control:
   - During room cooling interval
     - Internal tank heater will not function under room cooling interval.
   - During tank heat-up interval
     - Internal tank heater will turn ON after heat pump thermos off to boil tank temperature to tank set temperature.

5 2 ways valve is close.

6 Indoor water pump control:
   - Indoor water pump always turn ON if room heat pump thermo ON **OR** Tank thermo ON.

14.1.12 Outdoor Fan Motor Operation

Outdoor fan motor is adjusted according to operation condition. It starts when compressor starts operation and it stops 30 seconds after compressor stops operation.

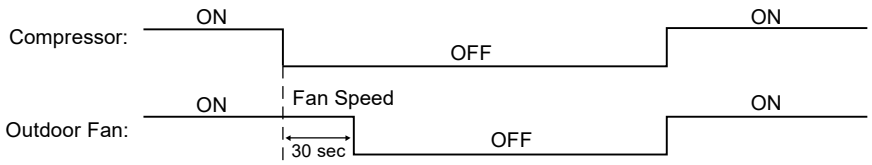

14.2 Water Pump

14.2.1 Water Pump Control

- Once the indoor unit is ON, the water pump will be ON immediately and no error judgment for 70 seconds. However, during this 70 seconds operation, if there is any abnormality cause at outdoor or malfunction, the compressor should be OFF immediately and restart delay after 3 minutes.
- The system will start checking on the water flow level after operation start for 70 seconds. If water flow level is detected low continuously 60 seconds, the water pump and the compressor will be OFF permanently and OFF/ON control panel LED will blink (H62 error occurs).
- When error happens, the power has to be reset to clear the error.
- If there is no error indication, the water pump shall be continuously running.
- The water pump will remain ON when compressor OFF due to thermostat OFF setting is reached.
- Water pump will OFF when room thermo **OR** tank thermo **OR** buffer tank thermo OFF.
- Water pump will delay 15 seconds to turn OFF when request to OFF except during anti-freeze deice activate or air purge mode.

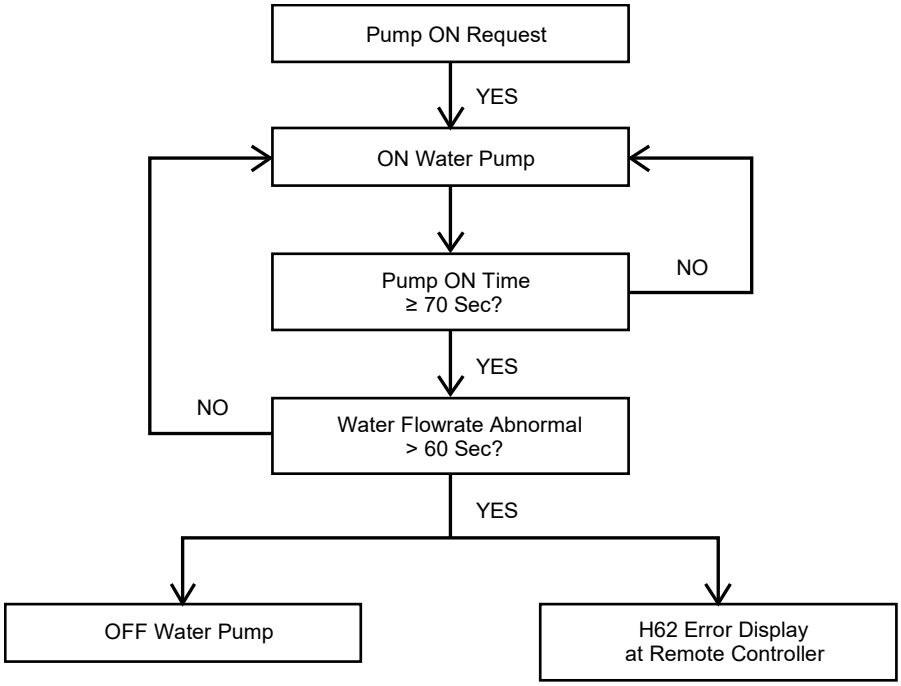

Maximum pump speed setting on remote control

1) When Pump flowrate setting is ΔT
   Standard pump speed is automatically controlled to get the designed water temperature different between water inlet and outlet (ΔT). The maximum pump speed setting limitation can be adjusted by the installer according to water circuit pressure drop condition.

2) When pump flowrate setting is Max. Duty
   Indoor water pump speed will operate at the maximum pump speed setting at room side operation. The maximum pump speed setting can be adjusted by the installer according to water circuit pressure drop condition.

However, the following sequences do not follow maximum pump duty setting by remote control.
- Pump down mode
- Air purge mode
- Normal deice

1) P-Q graph for different pump HEX duty

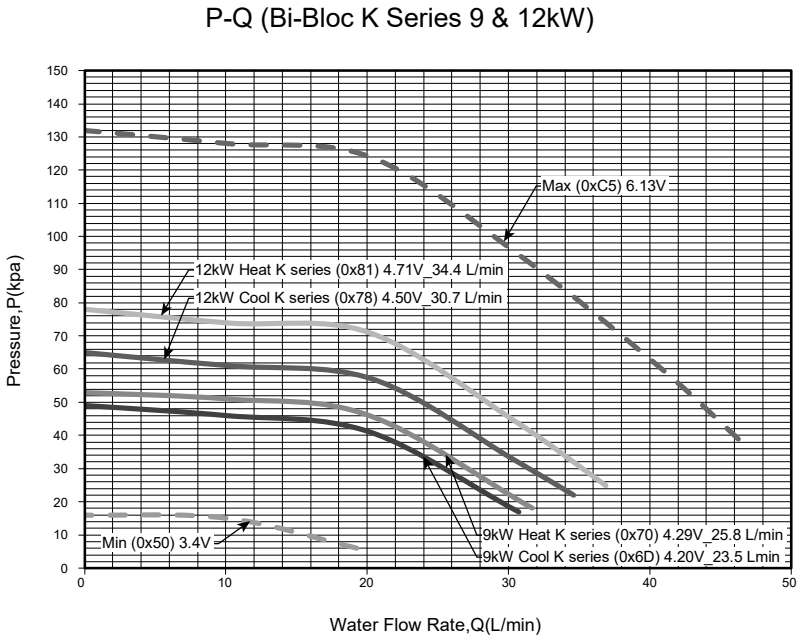

14.2.2 Zone Water Pump Control

Purpose:

- Water pump install at each zone to circulate the water inside each zone during buffer tank connection selected "YES" or 2 zone systems.

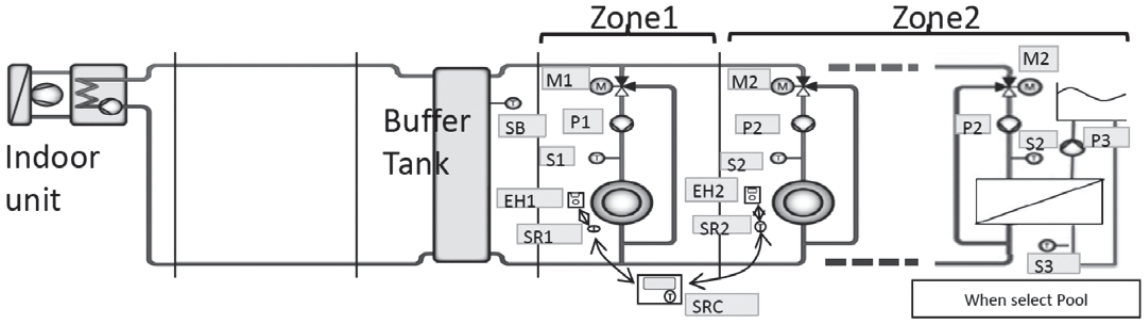

Content:

- AC type water pump install for this zone water pump control. When optional PCB connected, 230V output will drive this zone pump.
- There are three pump can be connected through Optional PCB. (Zone 1 Pump, Zone 2 Pump, & Pool Pump)

  * Zone 1 pump [P1] use to circulate zone 1 water circuit & Zone 1 mixing valve [M1] adjust to control the Zone 1 target water temperature.

  * Zone 2 pump [P2] use to circulate zone 2 water circuit & Zone 2 mixing valve [M2] adjust to control the Zone 2 target water temperature.

  * When Pool Function select as Zone 2 circuit, [P2] use to circulate water to heat exchanger which use to transfer heat to pool water.

  * Pool pump [P3] circulates the pool water through the heat exchanger to get warm water.

- Zone 1 and Zone 2 water pump start condition:
  - Zone room request ON
    (eg. Zone 1 thermo ON, only zone 1 pump will turn ON)

- Zone 1 and Zone 2 water pump stop condition:
  - Zone room request OFF
- Pool water pump start condition:
  - Pool Zone request ON **AND**
  - Pool function is selected
- Pool water pump stop condition
  - Pool zone: Zone room request OFF **OR**
  - Pool function is cancel

  * Zone 1 & Zone 2 water pump need to turn OFF when antifreeze deice pump stop control activate and turn ON back after the antifreeze deice pump stop control end under setting of "NO" buffer tank connection.

Zone Pump Prohibit ON control:
- Start condition:
  Zone 1 water temperature ≥ 75°C continuously for 5 minutes
  *stop zone water pump operates if the zone water fulfilled.
- Cancel condition:
  After 30 minutes from start condition fulfilled.
  *zone water pump operates according to normal condition.

Zone Pump Control during Anti-Freeze
Zone pump control during Zone Anti-Freeze Control:
- When Zone Anti-Freeze Flag=1, Zone Pump Turn ON.
- When Zone Anti-Freeze Flag=0, Zone Pump Turn OFF.

Zone pump control during Indoor Anti-Freeze Control:
- Zone pump only ON/OFF if the Extension PCB connected and Buffer Tank select "NO" condition

  When Indoor Anti-Freeze flag=1, Zone Pump Turn ON
  When Indoor Anti-Freeze flag=0, Zone Pump Turn OFF

* Pool Water Pump will not affected by both Indoor anti-freeze control or zone anti-freeze control.

14.2.3 Water Pump Speed Feedback Error

- Basically pump speed feedback is control by micon.
- When pump speed is below low limit or over high limit for a few seconds, micon detect pump error and system is stopped.
- Error detection conditions:
  - Detect abnormal water pump speed for continuous 10 secs.
  - Current pump speed < 700 rpm or
  - Current pump speed > 6000 rpm for 10 seconds.
- Control contents:
  - When error occurs, water pump, heating and heater is stopped for 30 seconds then restart again (Retry control).
  - When micon detect error again, system is stopped and error code [H20] is displayed at control panel.

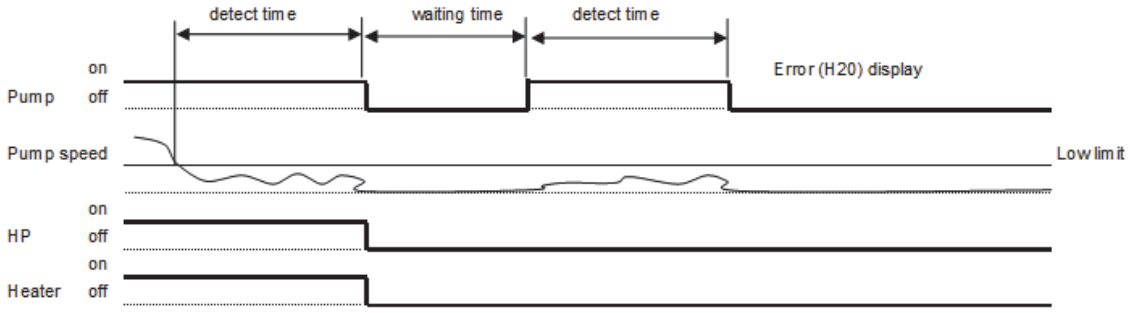

14.3 Water Pressure Control

- Once the indoor unit is ON, the water pump will be ON immediately and no error judgment for 70 seconds. However, during this 70 seconds operation, if there is any abnormality cause at outdoor or malfunction, the compressor should be OFF immediately and restart delay after 3 minutes.
- The system will start checking on the water pressure after operation start for 70 seconds. If water pressure is detected low continuously 300 seconds, the water pump and the compressor will be OFF permanently and OFF/ON control panel LED will blink (H21 error occurs).
- When error happens, the power has to be reset to clear the error.
- If there is no error indication, the water pump shall be continuously running.

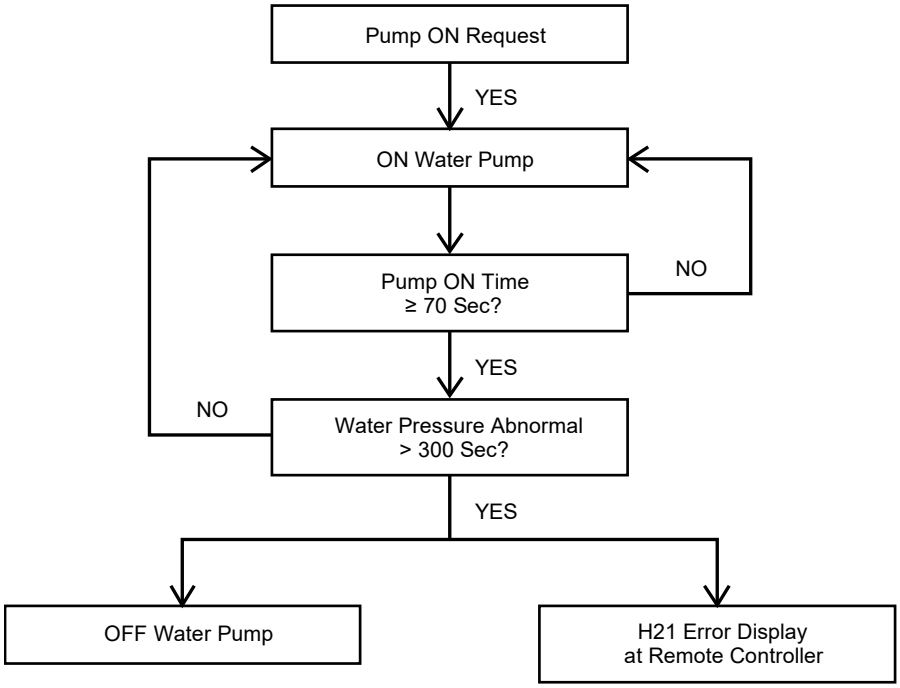

14.4 Indoor Unit Safety

14.4.1 Indoor Unit Safety Control

1 When water pump is ON, the system will start checking flow switch status (ON/OFF).
2 If the flow switch ON for 10 seconds, the system will check on the water inlet temperature for 10 seconds.
If the water inlet temperature not exceeds 80°C, the water pump shall be continuously running with normal mode.
If the water inlet temperature exceeds 80°C for continuously 10 seconds, the water pump will be OFF immediately.
3 After water pump OFF for more than 10 minutes, it will be ON back and the indoor unit safety control checking is restarted.

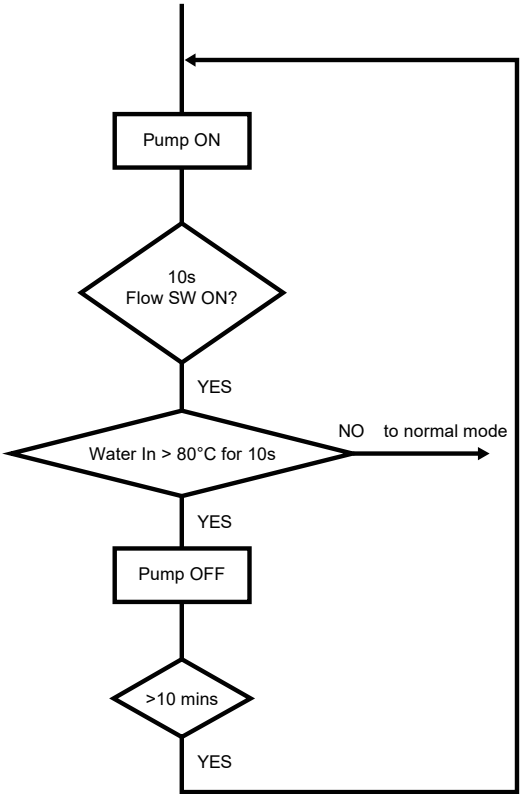

14.5 Auto Restart Control

1 When the power supply is cut off during the operation of Air-to-Water Heatpump, the compressor will reoperate after power supply resumes.

14.6 Indication Panel

LED	Operation
Color	Green
Light ON	Operation ON
Light OFF	Operation OFF

Note:
- If Operation LED is blinking, there is an abnormality operation occurs.

14.7 Indoor Back-Up Heater Control

14.7.1 Indoor Electric Heater Control

1 Normal Heating Mode
- Heater On condition:
  a. Heater switch is ON
  b. After Heatpump thermo ON for Remote Control Set Delay Time mins
  c. After water pump operate **[3]** mins
  d. Outdoor air temperature < Outdoor set temperature for heater
  e. When water outlet temperature < Water set temperature + Remote Control Heater ON Setting
  f. **[20]** minutes since previous Backup heater Off
     * When heatpump cannot operate due to error happens during normal operation, heater will go into force mode automatic
     * Heater need to operate during deice operation

- Heater Stop Condition:
  a. When outdoor set temperature > outdoor set temperature + **[+2°C]** for continuous 15 secs OR
  b. When water out temp > water set temperature + Remote Control Heater OFF Setting for continuous 15 secs OR
  c. Heater switch is Off OR
  d. Heatpump thermo-off or OFF condition

2 Force Heater Mode
- Heater On condition:
  a. After water pump operate **[3]** mins
  b. When water outlet temperature < water set temperature + Remote Control Heater ON Setting
  c. **[20]** minutes since previous Backup heater Off

- Heater Stop condition
  a. Force mode off **OR**
  b. When water outlet temperature > water set temperature + Remote Control Heater OFF Setting for continuous 15 secs

* Do not operate heater at the following situation
1 Water outlet temperature sensor, and water inlet sensor abnormal
2 Flow switch abnormal
3 Circulation pump stop condition

14.7.2 Room Heater Operation during Deice

Purpose:

- To protect the indoor Heat Exchanger from ice forming and prevent heat exchanger plate breakage.

Control content:

- This Heater protection control will activate only if the backup heater is enable at custom setup by remote controller. Once fulfil the start condition, room heater will turn ON together (base on max heater capacity selection) and stop together if stop condition is fulfilled.
  * If the heater is request to turn ON OLP feedback will be detected.

Starting conditions:

1. During normal deice operation 4~9
2. Water outlet temperature < 10°C or
3. Outdoor air temperature < -10°C or
4. Water inlet temperature < 27°C

Heater operates when 1 ~2 fulfilled **OR** When 1 and 3 ~ 4 is fulfilled.
However, this control does not relate to Heater ON/OFF button on remote control.

Stop condition:

- When normal deice end or
- Water outlet temperature > 45°C

However, room heater keeps ON if indoor electric heater control activate.

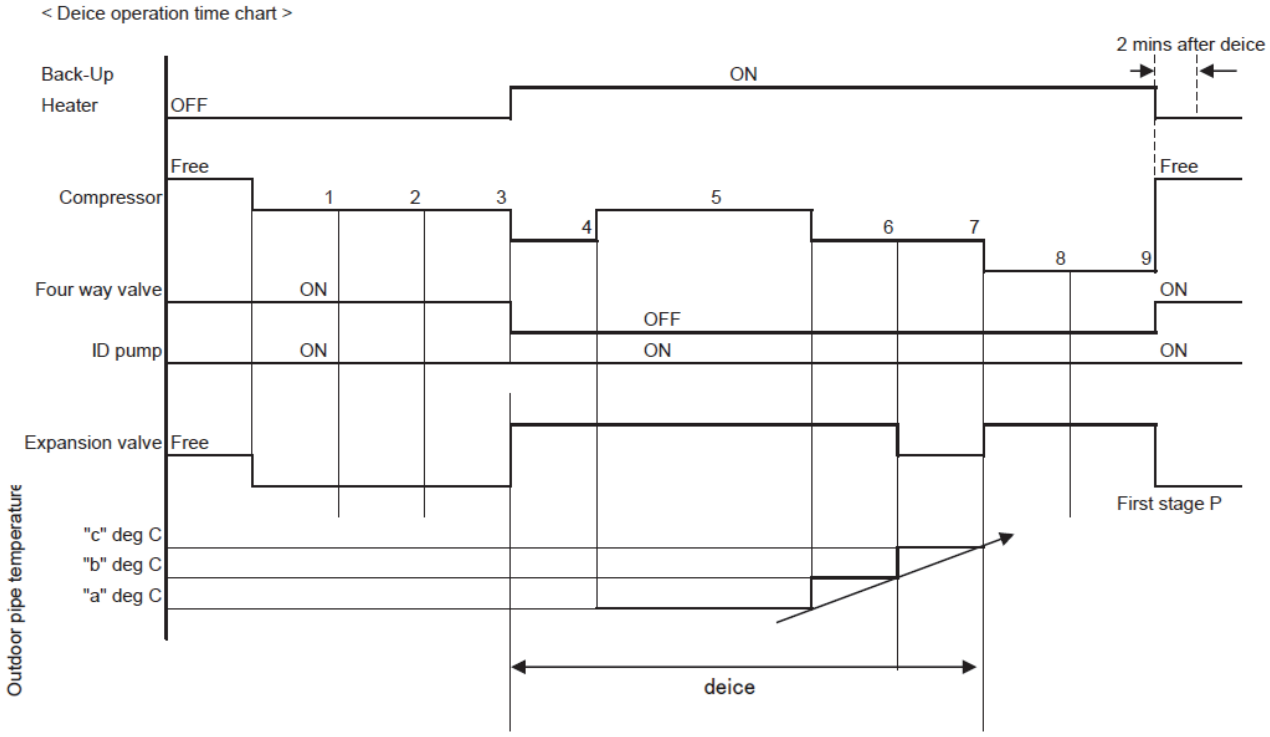

* Backup heater must Turn OFF if the water pump turn OFF.

14.8 Tank Heater Control

14.8.1 Tank Heater Remote Control Setting

1 Tank heater selection:
External: - Booster Heater use to heat up tank when select external
Internal: - Backup Heater use to heat up tank when select internal
* When select External Tank Heater, Heater Delay ON Timer need to set. (range 20 min ~ 3 hrs)

2 Tank Heater ON/OFF selection by user.

The remote control Tank set Temperature range will change according to the External and Internal Tank Heater use.

Tank Heater Selection	Range
External	40 ~ 75°C
Internal	40 ~ 65°C

14.8.2 Internal Heater Control at Tank Mode

- Internal heater turn ON condition:
  1 Internal Heater select for Tank heater by remote controller
  2 Tank Heater select ON by user.
  3 Backup Heater Enable
  4 Tank Temperature < Tank Set Temperature
  5 Heat Pump Thermo OFF
  6 20 minutes from previous heater off.

- Room heater turn OFF condition:
  1 Tank Temperature > Tank Set Temperature + [0°C] for continuous 15 seconds. **OR**
  2 Heat Pump Thermo ON **OR**
  3 Mode Change or Operation OFF by remote controller **OR**

  * Backup Heater Turn ON/OFF all together according to the selected heater capacity.

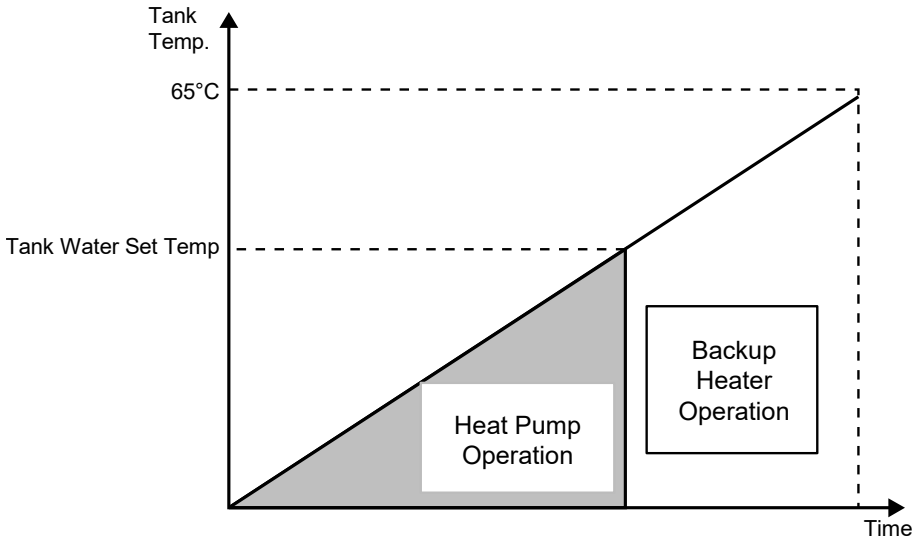

14.9 Base Pan Heater Control (Optional)

- To enable the base pan heater function, control panel initial setting has to be manually adjusted by activating Base Pan Heater menu.
- There are 2 optional start condition can be selected, Type A or Type B.
- Control details:

1 Type A: (Default Auto Mode)

Start conditions:

- When outdoor air temperature ≤ 3°C during heating and deice operation is ON.

Control contents:

- Base pan heater is ON during deice operation and continues ON for 10 minutes after deice operation ends.

Cancel condition:

- When outdoor temperature > 6°C after deice end or
- When operation is not at heating mode or
- Base pan heater ON timer count is completed.

2 Type B: (ON Mode)

Start conditions:

- When outdoor air temperature is ≤ 5°C and operates in heating mode, base pan heater is ON.

Cancel conditions:

- When outdoor air temperature is > 7°C or
- When operation is not at heating mode.

14.10 Force Heater Mode

Purpose of Force Heater Mode:

- As a backup heat source when heat pump error. Force heater Mode only control backup heater to heat up the room circuit, and turn ON back up heater or booster heater to boil up tank water base on the tank heater selection (internal or external).

Force Heater Control start condition:

- Force heater request ON by user during error OR auto turn ON by remote controller during error **AND** (Force Heater mode can be operate regardless of mode selection, remocon will send the latest mode selection force bit by bit to indoor. Indoor will judge to turn ON heater to room side if it is heat mode selected, and turn ON heater to heat tank water base on tank heater selection)
- During Error Happen (exclude the error list below)

Error List which not allow Force Heater operation

H12	Capacity Mismatch	H76	Indoor-Remote Controller Communication Error
H20	Abnormal Water Pump	H95	Abnormal Voltage Connection
H62	Abnormal Water Flow	F37	Abnormal Water Inlet sensor
H70	Abnormal Back-up Heater OLP	H45	Abnormal Water Outlet sensor
H74	PCB Communication Error	H21	Water Pressure Error
[When tank mode operate with external heater selected & tank heater select ON]			
H72	Abnormal tank sensor	H91	Abnormal tank heater OLP

Force Heater Control Stop Condition:

- Force Heater request OFF **OR**
- Operation OFF request **OR**
- Power reset **OR**
- Error of above list happens during force heater operation.

Control contents:

- After fulfill start condition, indoor will operate the force heater operation according to below mode condition
  Heat mode Only: Turn ON backup heater to achieve room heat pump target water temperature.
  Heat + Tank mode: Turn ON backup heater to heat up room **OR** Turn ON Heater to Boil up tank water.
  Cool mode Only: Water pump and backup heater will OFF in force heater mode.
  Cool + Tank mode: Operate pump and internal Heater OR External heater to Boil up tank water.
  Tank mode Only: Operate pump and internal Heater OR External heater to Boil up tank water.
  * For heat mode condition, backup heater will only turn ON if the backup heater is enable regardless of Room Heater Selection.
  * For tank mode condition, If internal heater selected backup heater will turn ON to boil up tank water.
  If external heater selected , booster heater will turn ON to boil up tank water regardless of tank heater selection.

Room Side: (Heat Mode):

- When force heater mode start condition fulfilled, turn ON water pump and turn ON backup heater follow below control.
- Operate the 3 ways valve at room side only and turn ON 2 ways valve as heat mode operation.
- Turn ON the zone pump and mixing valve if system select 2 zone system or Buffer tank connect YES, control according to normal zone pump and mixing valve control.
- When Force heater mode stop condition fulfilled, turn OFF heater as below condition and turn OFF water pump after pump delay time.

Backup Heater On Condition:

- When Force Heater Control start condition fulfill **AND**
- After water pump operate 2 minutes **AND**
- When water outlet temperature < water set temperature + Remote Control Heater ON Setting **AND**
- 20 minutes since previous Backup heater Off **AND**
- Backup Heater Enable

Backup Heater Stop condition:

- Force mode off **OR**
- Operation off **OR**
- When water outlet temperature > water set temperature + Remote Control Heater OFF Setting for continuous 15 secs **OR**
  * ON/OFF follow normal heater sequence.

Tank side (Tank mode):

- When tank mode select and force heater bit received, turn ON backup heater (INTERNAL) or Booster Heater (External) depend on the tank heater selection.
- If tank heater selection is INTERNAL, follow normal thermo judgement to switch 3 ways valve to tank side and room side.
- If tank heater selection is EXTERNAL, only turn ON booster heater according to tank thermo.

<u>Tank Heater selection is INTERNAL:</u>
Backup Heater ON Condition:

- After water pump operate 2 mins **AND**
- When tank temperature < Tank set temperature - [Remocon Set Tank Re-heat Temp] **AND**
- 20 minutes since previous Backup heater OFF **AND**
- Backup Heater Enable

Backup Heater OFF condition:

- Force mode off **OR**
- When tank temperature > Tank set temperature for continuous 15 secs **OR**
- Tank Operation OFF

<u>Tank Heater selection is EXTERNAL:</u>
Booster Heater ON condition:

- Force Heater mode ON **AND**
- Tank temperature < tank set temperature + [Remocon Set Tank Re-heat Temp] - 1°C, **AND**
- 20 minutes since previous heater off.

Booster Heater OFF condition:

- Tank temperature > tank set temperature for continuous 15 secs.
- Force mode OFF
- Tank Mode Operation OFF
  (During tank interval or tank mode condition, water pump and 3 ways valve will OFF)

14.11 Powerful Operation

Powerful mode is use to increase the capacity of heat pump to achieve higher target temperature. Powerful mode is applicable when heat mode is operating.

Remote control setting:
On quick menu of remote control, there is 4 options of powerful mode can be select.

- OFF : Cancel powerful mode
- 30 minutes : Set powerful for 30 minutes
- 60 minutes : Set powerful for 60 minutes
- 90 minutes : Set powerful for 90 minutes

Control contents:
During the time set by remote control, powerful will activate according to 2 shift up controls. However, this function is applicable only for heating. Remote control will transmit the signal to indoor unit once this function is select then transmit OFF signal to indoor when the timer is complete. Indoor will transmit signal to outdoor for frequency control.

Indoor setting temperature shift

- If system is standard system (Optional PCB is not connected)
  - Target water temperature will shift up to Wlo or Whi whichever higher.
- If system is extension system (Optional PCB is connected)
  - Target water Zone 1 and Zone 2 temperature will shift up to Wlo or Whi whichever higher.

  * If “Direct Type” temperature control is select, this powerful shift up setting is not effective.

- **Start condition**
  - Powerful function is select by remote control.

- **End Condition**
  - OFF/ON button is pressed.
  - Powerful function is OFF by remote control.

14.12 Quiet Operation

Quiet mode is use to reduce the noise of outdoor unit by reducing the frequency or fan speed.

Quiet level
There are 3 level (Level 1, Level 2, Level 3) to set by quick menu function on remote control.

Control content
Once the quiet function is select, the remote control will transmit the signal to indoor and outdoor unit.

Start condition

1) In case of “Sound” is set for “Quiet priority” on the remote control
   If any of below condition is achieved
   - Quiet mode is set on remote control.
   - Quiet mode is request ON by weekly timer.

2) In case of “Capacity” is set for “Quiet priority” on the remote control
   If condition { a) or b) } and { c) or d) or e) } is achieved
   a) Quiet mode is set on remote control.
   b) Quiet mode is request ON by weekly timer.
   c) During heating : Water outlet temperature > Target Water Temperature + [-3°C]
   d) During Cooling : Water outlet temperature < Target Water Temperature + [3°C]
   e) During tank heat up : Tank temperature > Tank set Temperature + [-3°C]

Stop condition

1) In case of “Sound” is set for “Quiet priority” on the remote control
   If any of below condition is achieved
   - OFF/ON button is pressed.
   - Quiet mode is OFF by remote control.
   - Quiet mode is request OFF by weekly timer.

2) In case of “Capacity” is set for “Quiet priority” on the remote control
   If any of below condition is achieved
   - OFF/ON button is pressed.
   - Quiet mode is OFF by remote control.
   - Quiet mode is request OFF by weekly timer.
   - During heating : Water outlet temperature ≤ Target Water Temperature + [-5°C] for continuously [30] minutes.
   - During Cooling : Water outlet temperature ≥ Target Water Temperature + [5°C] for continuously [30] minutes.
   - During tank heat up : Tank temperature ≤ Tank set temperature + [-5°C] for continuously [30] minutes.

14.13 Sterilization Mode

- Purpose:
  - To sterilize water tank by setting the required boiling temperature.

- Remote control setting
  - Days for sterilization function to start can be select.
  - Time of selected day to start sterilization function.
  - Boiling temperature (Internal heater is 55°C ~ 65°C)
  - Maximum operation time is 5 minutes to 1 hour.

- Start condition
  - Tank connection set to “YES” by remote control
  - Sterilization function selects “YES”.
  - Sterilization signal received from remote controller by timer.
  - Tank mode request ON.

- Stop condition
  - When boiling timer is completed. Boiling timer (Remote control set maximum operation time) start counting once tank achieve boiling set temperature **OR**
  - After 8 hours of operation since sterilization start.
  - Tank mode request OFF.

- Control content:
  - During sterilization function activation time, target tank set temperature will internally change to boiling set temperature.
  - During sterilization activates, heat pump and heater (external or internal) will operate as normal tank mode to achieve the boiling set temperature.
  - Sterilization operation will end when stop condition is fulfill.
  - After sterilization is complete, tank set temperature will resume to normal operation.

* Tank temperature may not achieve boiling set temperature if tank heater is select OFF **OR** external compressor switch.

14.14 Outdoor Ambient Thermo OFF Control

- Purpose:
  - Stop provides heating to room side during high outdoor ambient condition.

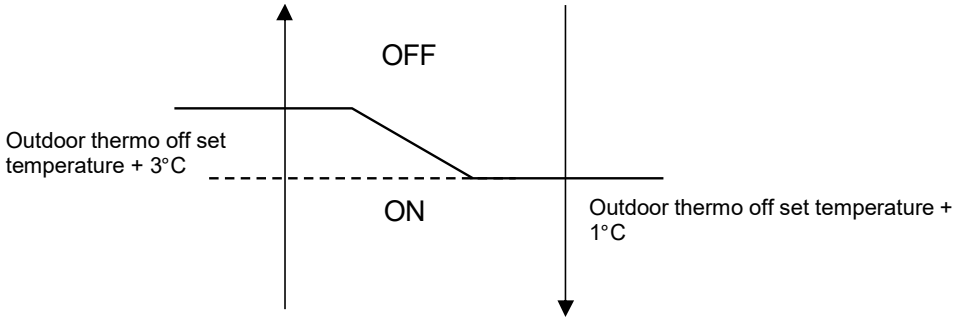

- Control content:
  - Heating outdoor ambient thermos OFF control only applicable when heat pump operate in heat mode. (This control will not activate when running in tank side)
  - Heat pump and water pump will turn OFF when outdoor ambient is higher than outdoor thermo OFF set temperature.
  - Heat pump thermos ON when outdoor ambient < outdoor thermos OFF set temperature + 1°C.

14.15 Alternative Outdoor Ambient Sensor Control

Purpose of the Alternative Outdoor Ambient Sensor:

- It is some possibility that the air to water heat pump unit will install at a location where the original ambient sensor is expose to direct sunlight. Therefore, another optional ambient sensor can be connect to indoor PCB and locate at new and better reading location to improve the heat pump performance.

Control Detail:

- Remocon can select either the extra outdoor ambient sensor is connected or not. (YES/NO)
- The alternative outdoor ambient sensor will connect to indoor unit main PCB terminal.

  - when alternative sensor select NO
    - Original Outdoor temperature sensor will use for Indoor & Outdoor heat pump operation reference sensor.
    - Data communication direction : OUTDOOR send outdoor temperature reading to INDOOR.
    - Error judge : OUTDOOR will judge the original outdoor sensor error (F36 display if error detect). No judge error on alternative outdoor sensor

  - when alternative sensor select YES
    - Alternative Outdoor temperature sensor will use for Indoor & Outdoor heat pump operation reference sensor.
    - Data communication direction : INDOOR send outdoor temperature reading to OUTDOOR.
    - Error judge : INDOOR will judge the Extra outdoor sensor error only after operation ON request received from remocon.
      (F36 display if error detect). No judge error on original outdoor sensor.

14.16 Force DHW mode

Purpose:
When user want to use hot water now, user can press this force DWH mode under the quick menu to operate tank only mode to boil up the tank temperature.

Remocon setting:
Force DHW function can be activate under quick menu.

Control Content:

- when press the Force DHW function during operation OFF condition:
  - When receive this Force DHW bit from remocon, indoor will run tank only mode regardless of the mode selection.
  - After tank temperature achieve tank thermo off temperature, turn OFF force DHW bit and return to operation OFF with previous mode selection.
- When press the Force DHW function during operation ON condition:

- When receive this Force DHW bit from remocon, indoor will memories the running mode and run tank only mode regardless of the mode selection.
- After tank temperature achieve tank thermo off temperature, turn OFF force DHW bit and return to previous memories running mode.

  * when operation OFF or mode change request from remocon during force DHW mode operation, End force DHW mode and follow the new request operation.

  * Once receive force DHW mode from remocon, indoor direct start tank mode and consider tank thermo ON. Thermo OFF only when achieve tank thermo OFF depend on the Tank System Setting.

14.17 SMART DHW mode

Panasonic All In One model provide the option to choose STANDARD DHW Mode or SMART DHW Mode for Tank Heat Up according to requirement. SMART DHW mode comparatively consume lower tank heat up power but longer re-heat time than STANDARD DHW Mode.

SMART DHW control

- During SMART DHW start time 20:00 (Default Setting) to SMART DHW stop time 05:00 (Default setting)
  Heat pump re-heat the tank water only when tank temperature drop below 20°C (Default setting)

- Time between 05:00 to 20:00
  Heat pump reheat the tank water when tank temperature as below condition

Condition 1: Tank Heater ON
Reheat when tank temperature below tank set temperature + R/C (Tank re-heat Temperature) - 3°C

Condition 2: Tank Heater OFF
Reheat when tank temperature below Tank set temperature or 52°C (Whichever lower) + R/C (Tank re-heat Temperature) -3°C

* SMART DHW start time, stop time and SMART ON Temperature can change in CUSTOM menu.

STANDARD DHW Mode

- Heat pump always reheat the tank water when tank temperature as below condition

Condition 1: Tank Heater ON
Reheat when tank temperature below tank set temperature + R/C (Tank re-heat temperature)

Condition 2: Tank Heater OFF
Reheat when tank temperature below Tank set temperature or 52°C (Whichever lower) + R/C (Tank re-heat temperature)

14.18 DHW Capacity Setting

DHW Capacity is heat pump heating capacity output control during tank boiling operation. There are two DHW capacity setting (VARIABLE & STANDARD) which can be set in remote control.

VARIABLE DHW Capacity:
- Heat pump operate with efficient (Low) Capacity to boil tank temperature during re-heat process. And heat pump regulated to operate with high capacity to boil tank temperature when tank temperature drop below 25°C.

STANDARD DHW Capacity:
- Heat pump operate according to outdoor rated heating capacity during tank boiling process.

14.19 Anti Freeze Control

- Anti freeze protection control menu can be set YES or NO by control panel.
- In heatpump system, there are 3 types of anti freeze control:
  1. Expansion tank anti-freeze control
     - Expansion tank anti freeze heater ON condition:
       - Outdoor ambient temp. < 3°C
     - Expansion tank anti freeze heater OFF condition:
       - Outdoor ambient temp. > 4°C

  2. Water pump circulation anti freeze control
     - Water pump turns ON when **ALL** below conditions are fulfilled:
       - Heatpump OFF (stand by) OR error occurs.
       - Water flowing flag is ON.
       - Water flow switch is not abnormal.
       - Outdoor ambient temp. < 3°C OR outdoor ambient temp. sensor is abnormal.
       - Water inlet/outlet temp. < 6°C.
       - After 5 minutes from previous water pump OFF.
     - Water pump turn OFF when **ANY** of below conditions is fulfilled:
       - Outdoor ambient temperature ≥ 4°C.
       - During -5°C < outdoor ambient temp. < 4°C
         - After water pump ON for 4 minutes, and water inlet temp. ≥ 8°C.
         - Else, shift to back up heater anti freeze control.
       - During outdoor ambient temp. < -5°C
         - After water pump ON for 4 minutes, and water inlet/outlet ≥ 20°C.
         - Else, shift to back up heater anti freeze control.
       - When operation ON and once compressor starts
     - However, if flow switch is abnormal (H62), then water pump circulation anti freeze control will not activate.

  3. Back up heater anti freeze control:
     - Back up heater turn ON when **ALL** below conditions is fulfilled:
       - Water inlet/outlet temp. < 6°C.
       - Water pump circulation anti freeze control activated and water pump ON for 4 minutes.
     - Back up heater turns OFF when ANY of below conditions is fulfilled:
       - Water inlet/outlet temp. > 28°C.
       - Water pump circulation anti freeze control deactivated/water pump OFF.
     - However, if back up heater is abnormal (H70) then back up heater anti freeze control will not activate.

14.19.1 Zone Anti-Freeze Control

- If buffer tank selection is “NO” and Anti- Freeze function select “NO” from remote control, this control cannot activate.

Start condition:
- After [5] min from previous Zone pump off. **AND**
- Outdoor air temp < [3] °C **OR** Outdoor sensor is abnormal. **AND**
- Zone water temperature < [6] °C **OR** Zone Sensor Short or Open

Cancel condition:
- After water Zone pump ON [4] min **AND**
- Outdoor air temp ≥ [4] °C **OR**
- During -5 °C ≤ Outdoor air temp < [4] °C **OR**
  Zone water temperature sensor > [8] °C
- During Outdoor air temp < [-5] °C
  Zone water temperature sensor > [20] °C
  *However, Zone water temperature sensor is Open or Short, Condition C and D is ignored.

14.20 Solar Operation (Optional)

14.20.1 Solar Operation:

Solar function:

- This function allow user to control the solar pump to operate depend on the solar sensor reading compare to the tank installed. Solar pump will circulate the hot water energy store at solar panel to heat up the DHW Tank or Buffer Tank.

Solar Connection Diagram:

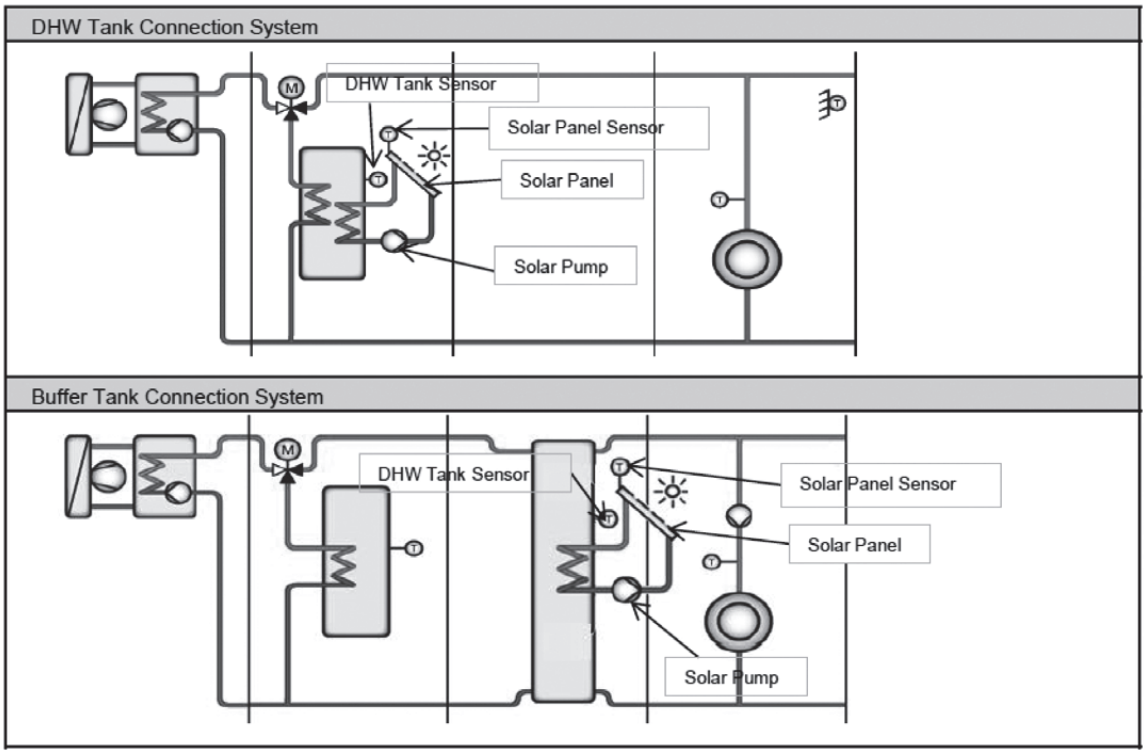

- Solar function can only enable when the Optional PCB is connected.
- Few part as below need to install to control the solar operation:
  - Solar Panel
  - Solar Pump
  - Solar Panel Sensor
  - Tank Sensor (Buffer tank sensor OR DHW Tank sensor depend on the connection direction)
    * During Solar Connection to the system, installer need to alert on the high water temperature may flow to the zone circuit or DHW piping circuit. Therefore pipe which withstand higher water temperature need to be installed.
- Solar remote control setting
  1. Solar Setting can only be set when the optional PCB connection is select "YES"
  2. By remote controller, Setting as below list can be set for solar function operation (Installer Menu)
     - Solar Function ("YES" or "NO)
     - Tank Connection Direction ("DHW TANK" or "BUFFER TANK")
     - Delta T turns ON: Difference temperature setting between solar panel sensor and Tank to turn on solar pump. (Range :5 ~ 15°C)
     - Delta T turns OFF: Difference temperature setting between solar panel thermistor and Tank to turn off solar pump. (Range :2 ~ 10°C)
     - Outdoor temp for Anti-Freeze : Outdoor temp to start Anti-Freeze control for solar circuit. (Range : -20 ~ 10°C)
     - Tank Temperature HI Limit Set (Range : 70 ~ 90°C)

14.20.2 Solar Operation Control

- Solar function can only be activate if the solar function selection “YES” from remote control. To achieve hot water from solar panel, indoor need to control the solar pump and circulate hot water from solar panel.

  Under normal case:
  - Solar pump start condition:
    - Solar panel temperature > Delta T turn on setting temp (R/C) + Tank temperature (depend on selection, DHW or Buffer) **AND**
    - Tank temperature (DHW or Buffer) < Solar HI Limit Temp (R/C) **AND**
    - Operation ON with heat mode (apply to solar connect to "Buffer Tank" case)

    * Condition c) ignore if the solar system is connect to DHW tank (control active under operation OFF time for Tank connection case)

  - Solar pump stop condition:
    - Solar panel temperature < Delta T turn OFF setting temp (R/C) + Tank temperature (depend on selection, DHW or Buffer) **OR**
    - Tank hot water temp >= Solar HI Limit Temp (R/C) + [2]°C

    Under solar Anti-freeze protection control:
  - Solar pump start condition:
    - Outdoor temp < Outdoor temp setting for Anti-Freeze (R/C)
  - Solar pump stop condition:
    - Outdoor temp > Outdoor temp setting for Anti-Freeze + [2]°C

**However, During Cool mode this function cannot activate if Tank selection is “Buffer Tank".
**Solar pump can operate even if Heat pump is under error stop.

- Solar operation during error:
  - During Tank sensor (DHW or Buffer depend on selection) abnormal, Solar operation will not able to function.
  - During Solar Panel sensor detect OPEN (not include SHORT), Solar operation will not able to function too.

14.21 Boiler Bivalent Control

- Boiler is an additional or alternative heat source to heat up the room when necessary.
- Purpose of this control is to turn ON and turn OFF the Boiler output signal when boiler heating capacity needed in the system.
- Boiler is possible to connect to DHW Tank and Buffer Tank depends on the installer.
- Boiler operation parameter need to be set on Boiler itself, indoor do not control the boiler operation direction and operation.
- There is two option of control pattern can be set by remote controller: AUTO OR SG ready Mode

  Auto Control Mode:
  1 There are Alternative mode, Parallel mode, & Advance Parallel mode available to select by installer to fit to the total system.

  Remote control setting value:
  1 Outdoor Ambient Set = (Range: -15°C ~ 35°C)

- **Alternative Mode**
  - Only one heat source operates at one time, either heat pump or boiler depends on condition.

  * External pump will turn ON when the external pump selection is ON when boiler is ON even heat pump is OFF.

  Control detail:
  During Operation ON at Heat mode or Tank mode or Heat + Tank Mode
  - Boiler signal turn ON and heat pump and water pump turn OFF when:
    - Outdoor ambient < Outdoor Ambient Set **AND**
    - Boiler prohibit flag = 0

** However indoor water pump can operate when Anti-freeze control condition fulfilled.

  - Boiler signal turn OFF and heat pump and water pump turn ON when:
    - Outdoor ambient > Outdoor Ambient Set + [2°C] **OR**
    - Boiler prohibit flag = 1

- **Parallel Mode**
  - Parallel mode allows heat pump and boiler ON at the same time. Boiler operates as an additional heating capacity when low heat pump capacity at low ambient condition.

  Control detail:
  During operation ON at Heat mode or Tank mode or Heat + Tank mode
  - Boiler signal turns ON when:
    - Outdoor ambient < Outdoor Ambient Set **AND**
    - Boiler prohibit flag = 0
  - Boiler signal turns OFF when:
    - Outdoor ambient > Outdoor Ambient Set + [2°C] **OR**
    - Boiler prohibit flag = 1

- **Advance Parallel Mode**
  - Advance parallel mode allow heat pump to operate and turn ON boiler only when ambient and temperature condition is fulfilled.

  Remote control setting value:
  1 Outdoor Ambient Set = (Range : -15°C ~ 35°C)
  2 Selection of boiler connection direction. (Heat only, DHW only, Heat & DHW)
  3 Setting data under Heat Direction
    - Start Temperature | START_TEMP |
    - Start Delay Timer | START_TIMER |
    - Stop Temperature | STOP_TEMP |
    - Stop Delay Timer | STOP_TIMER |
  4 Setting data under DHW Direction
    - Delay Timer | DELAY_TIMER |

- **SG ready Control Mode**
  - Using same SG ready from Sub Board input to control boiler ON/OFF output.

  * When this SG ready is select for bivalent control, default SG ready function will change to control bivalent output
  - Remote controller can set the External Pump ON/OFF like bivalent alternative mode

  Control Content
  Indoor will follow the SG ready bit input to control ON/OFF heat pump and boiler
  00 : Heat pump OFF, Boiler OFF 10 : Heat pump OFF, Boiler ON
  01 : Heat pump ON, Boiler OFF 11 : Heat pump ON, Boiler

  * External pump will turn ON when the external pump selection is ON when boiler is ON even heat pump is OFF.

  Control detail:
  During operation ON at Heat Mode
  - Boiler signal turns ON when
    - Outdoor ambient < Outdoor Ambient Set **AND**
    - Buffer tank temperature < Target Buffer Tank Temperature + [START_TEMP] for [START_TIMER] **AND**
    - Heat pump operate at room side AND
    - Connection of Boiler to Heating Select "YES" From installer menu **AND**
    - Buffer Tank connection select "YES" **AND**
    - Boiler prohibit flag = 0

  - Boiler signal turns OFF when
    - Outdoor ambient > Outdoor Ambient Set + [-2°C] **OR**
    - Buffer Tank temperature > Target Buffer Tank temperature + [STOP_TEMP] for [STOP_TIMER] **OR**
    - Heat pump not at room side. **OR]**
    - Boiler prohibit flag = 1

  During operation ON at Tank Mode
  - Boiler signal turns ON when
    - Outdoor ambient < Outdoor Ambient Set **AND**
    - Heat pump operate at tank side for continuous | DELAY_TIMER | **AND**
    - Connection of Boiler to DWH Tank select "YES" from installer menu. **AND**
    - Boiler prohibit flag = 0

- Boiler signal turns OFF when
  - Outdoor ambient > Outdoor Ambient Set + [2°C] **OR**
  - Heat pump not operates at tank side. **OR**
  - Boiler prohibit flag = 1

Boiler prohibit flag control

Purpose:

- For product safety. Boiler signal is OFF when water temperature is too high.

Start condition:

- Water outlet ≥ 85°C continues for 5 minutes.
- Water inlet ≥ 85°C continues for 5 minutes.
- Zone1 water temp ≥ 75°C continues for 5 minutes.
- Zone2 water temp ≥ 75°C continues for 5 minutes.

Contents:

- After start condition fulfilled, set boiler prohibit flag = 1

Cancel condition:

- After 30 minutes from start condition fulfilled.

Contents:

- Set boiler prohibit flag = 0

Smart Bivalent Control Mode:

1 When this mode is selected by installer, it will decide whether to use heat pump or boiler to heat up room and sanitary tank.

Remote control setting value:

1 Energy price → Electricity price 1 ~ 10 = (Range : 0 ~ 999.9 */kWh)
Energy price → Boiler price = (Range : 0 ~ 999.9 */kWh) → Boiler efficiency = (Range : 0 ~ 99%)
2 Season setting → Season 1 ~ 4 = (Range : Jan ~ Dec)
3 Schedule setting → Season 1 ~ 4 → Pattern 1 ~ 4 → Start time = (Range : 12am ~ 11pm) → Price = (Range : 0 ~ 10)

* Installer is to input all the remote control setting as shown above based on regional electricity price rate and various season.

Control detail:

- Usage of heat pump or boiler to heat up is decided based on which heat source is cheaper as a result of the calculation from these remote control setting.
- It varies depends on heat pump's efficiency at various outdoor ambient condition and the boiler's efficiency.

14.22 External Room Thermostat Control (Optional)

Purpose:

1 Better room temperature control to fulfill different temperature request by external room thermostat.
Recommended external room thermostat:

Maker	Characteristic
Siemen (REV200)	Touch panel
Siemen (RAA20)	Analog

Connection of external room thermostat:
Wire Connection and thermo characteristic of Siemen REV200:

Setting	L/L1 (H)	Heat Thermo	L/L2 (C)	Cool Thermo
Set Temp < Actual Temp	Open Circuit	OFF	Short Circuit	ON
Set Temp > Actual Temp	Short Circuit	ON	Open Circuit	OFF

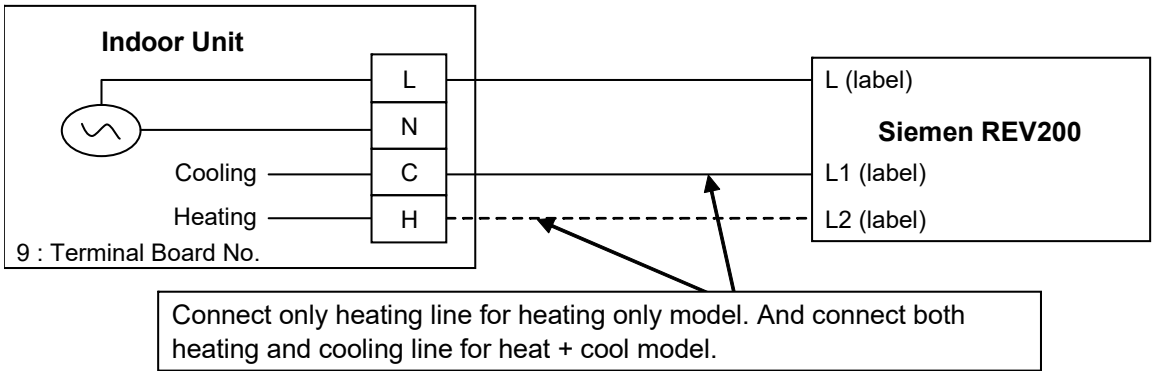

Wire Connection and thermo characteristic of Siemen RAA20:

Setting	L/Y1 (H)	Heat Thermo	L/Y2 (C)	Cool Thermo
Set Temp < Actual Temp	Open Circuit	OFF	Short Circuit	ON
Set Temp > Actual Temp	Short Circuit	ON	Open Circuit	OFF

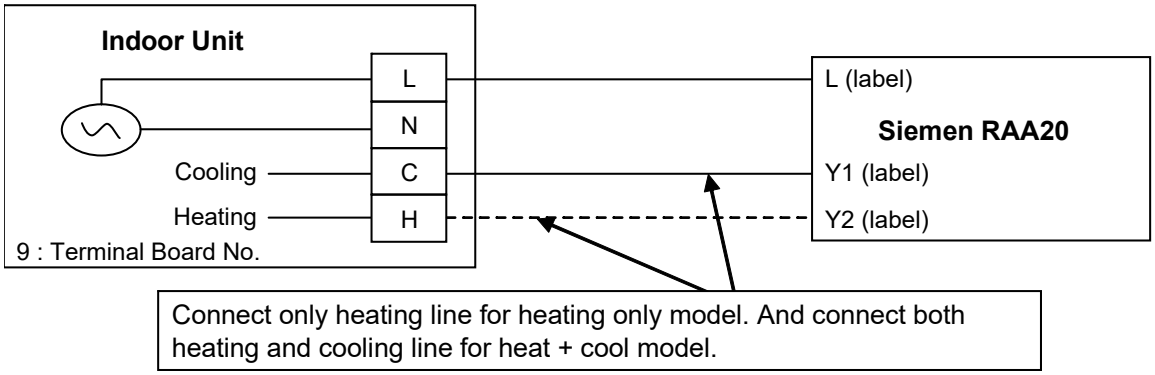

Control Content:

- External room thermostat control activate only when remote thermostat connection select YES by Indoor control panel.
- When indoor running heat mode, refer thermo On/Off from heating line feedback. And when indoor running cool mode, refer thermo On/Off from cooling line feedback.
- Heat pump Off immediately when receive thermo off feedback.

14.23 Three Ways Valve Control

Purpose:

- 3 ways valve is used to change flow direction of hot water from heat pump between heating side and tank side.

Control contents:

1. 3 ways valve switch Off:
   - During 3 ways valve switch Off time, the hot water will provide heat capacity to heating side.
2. 3 ways valve switch On:
   - During 3 ways valve switch On time, the hot water will provide heat capacity to tank side.
3. Stop condition:
   - During stop mode, 3 ways valve will be in switch off position.
4. When deice flag received from outdoor
   - During Heat mode, 3 ways valve maintain at room side.
   - During Tank mode, 3 ways valve switch ON to tank side regardless of tank thermo conditions.
   - During Heat + Tank mode, 3 ways valve direction is as below
     a) When receive deice bit from outdoor, if 3 ways valve is ON to tank side, maintain at tank side.
     b) When receive deice bit from outdoor, if 3 ways valve is OFF at room side, maintain at room side when any of below condition achieved :-
     i) Tank temperature < [40°C]
     ii) Remote controller ‘DHW Defrost’ select ‘NO’
     Else, switch ON to Tank side.
     * Resume back to room interval after deice operation complete.

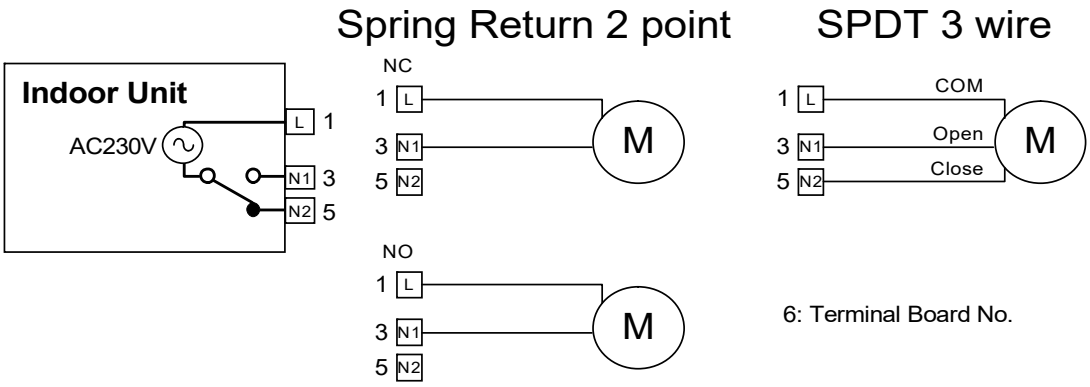

* During pump down and force mode, fix 3 ways valve in close condition.

<u>* Recommended Parts : SFA 21/18 (Siemens)</u>

14.24 Two Ways Valve Control

Functionality of 2 ways valve:

- Use to allow hot water to floor heating panel or block cold water to floor heating panel.

Control contents:

1 When indoor running in heat mode, OPEN the 2 ways valve.
2 When indoor running in cool mode, CLOSE the 2 ways valve.
3 Stop condition:
   a. During stop mode, fix 2 ways valve in close condition.

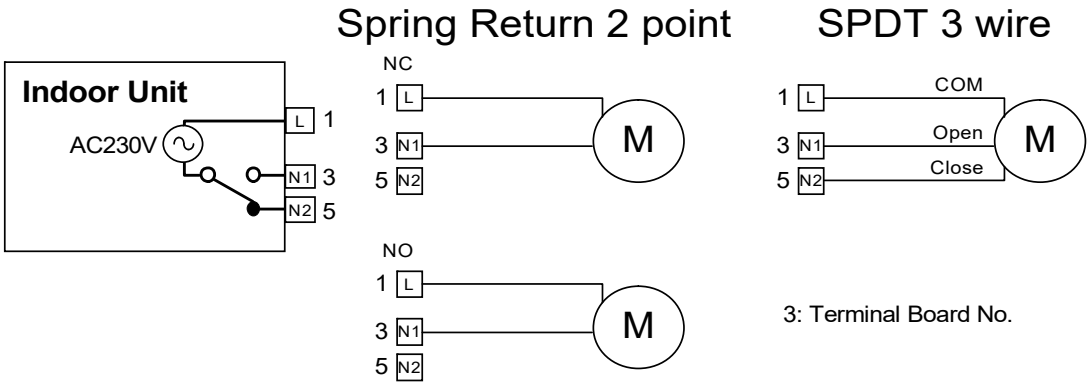

* During pump down mode, fix 2 ways valve in close condition.
* During force mode, open 2 ways valve.

<u>* Recommended Parts : SFA 21/18 (Siemens)</u>

14.25 External OFF/ON Control

- Communication circuit between indoor unit and external controller is as per below.

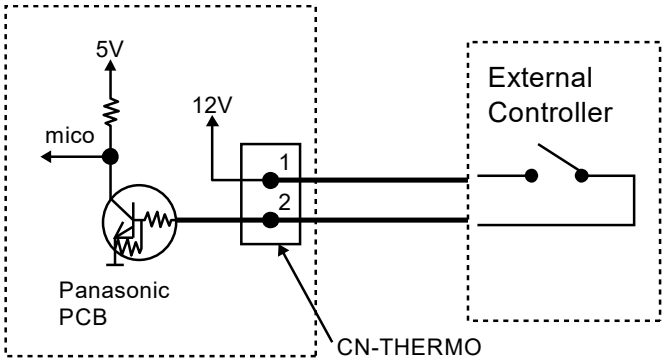

- Maximum length of communication cable is 50 meter.
- Control content:

External Control Switch	Control Panel OFF/ON	Control Panel Power LED	System Status
ON	ON	ON	ON
ON	OFF	OFF	OFF
OFF	ON	ON	OFF
OFF	OFF	OFF	OFF

Remocon Screen Display and Control Detail:

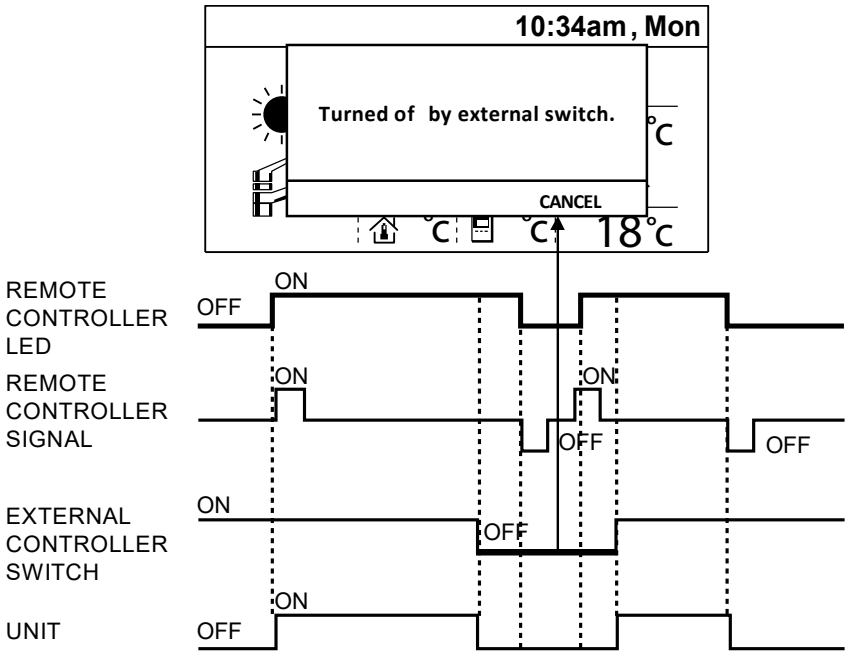

When External SW connection select "YES" from remocon installer menu:

- Heating or Cooling system will operate normally if the External Switch signal is ON.
- Once the External Switch turn OFF, System Turn OFF (Heat pump, water pump, heater etc…)
- Remocon LED remain ON or OFF according to the current operation request.
- Pop up menu at remocon main screen as above screen to inform customer system stop by External Switch.
- It is possible to press cancel and return to main screen to do change of operation setting while waiting the External Switch turn ON back.
- Remocon LED will always follow the latest changes from remocon.
- If no action on remocon for continuous 5 minutes, the pop up screen will show again on the screen.
- But once the External Switch Turn ON back, pop up screen will disappear and system can operate normally according to the latest operation setting and request.

14.26 External Compressor Switch (Optional PCB)

External compressor switch port can have two purpose of control as below:

- Heat source ON/OFF function (Dip switch Pin 3 on PCB "OFF")
- Heater ON/OFF function (Dip switch Pin 3 on PCB "ON")
- Heat source ON/OFF function

Purpose:

- Heat pump ON/OFF function is use to turn OFF the high power consumption device (Heat pump, & Heater) when there is energy or electric current limitation. Other optional function still can be operate under heat pump and heater OFF condition.

Control Detail:

- This External Compressor Switch is possible to connect to Optional PCB only.
- Once the remocon select External Compressor Switch connection "YES", & Dip Switch on PCB "OFF" This heat pump ON/OFF function will activate
- The ON/OFF signal of this External Compressor Switch is same as External Switch.
- When the External Compressor Switch is ON:
  - Heat pump system operate normally
- When the External Compressor Switch is OFF:
  - Heat pump, Indoor water pump & Heater (Booster heater & Backup Heater) need to turn OFF
  - Solar, Boiler and zone control can be operate follow normal control condition.
    * pump delay OFF also included in this control

  (There is NO pop up screen like External Switch when this External Compressor Switch is OFF.)

- Heater ON/OFF function

Purpose:

- Heater ON/OFF function is use to turn OFF the heater (backup heater & booster heater) when there is energy or electric current limitation. Heat pump and other optional function still can operate.

Control detail:

- This External Compressor Switch is possible to connect to Optional PCB only.
- Once the remocon select External Compressor Switch connection "YES", & Dip Switch on PCB "ON" This heater ON/OFF function will activate
- When the External Compressor Switch is ON:
  - Heat pump and heater operate normally
- When the External Compressor Switch is OFF:
  - Backup heater and booster heater cannot operate even heater request is ON.
  - Heat pump and option function (Solar, Boiler and zone control) can be operate follow normal control condition.

  (There is NO pop up screen like External Switch when this External Compressor Switch is OFF.)

14.27 Heat/Cool Switch (Optional PCB)

Purpose:

- User can switch the running mode from heat to cool or cool to heat through external installed Heat/Cool switch. This kind of heat / cool switch may built in inside the field supply room remocon as well.

Control contents:

- Heat/Cool Switch can only be set when Cool Function is "enable" at custom menu setting, & Extension PCB select "YES" & Zone 1 not set "Pool" condition.
- This heat/cool switch control will be activate only when installer set the Heat/Cool Switch "USE" through remocon.
- Once the Heat/Cool Switch Set "USE", remocon will check indoor send Signal to judge the option of mode select.
  - When Heat/Cool Switch Contact Open : Remocon only can select Heat Mode, or Heat + Tank Mode, or Tank Mode
  - When Heat/Cool Switch Contact Close : Remocon only can select Cool Mode, or Cool + Tank Mode, or Tank Mode
- Operation ON/OFF will depend on remocon request.
- When Heat Mode is running with Contact Open, user change this setting to contact close, indoor will this signal to remocon judge and change mode to cool and send back to indoor. And it is same as from cool mode change to heat mode.
  * This switch have higher priority, remocon follow indoor send signal when control activated.
  * There is no effect to the operation when the mode running is only Tank Mode.

  (Weekly Timer are ignored and cannot be set during Heat / Cool Switch is "Enable" Condition.)

14.28 SG Ready Control (Optional PCB)

Purpose:

- To set ON/OFF of heat pump and target temperature by digital input of third party device if necessary in field.

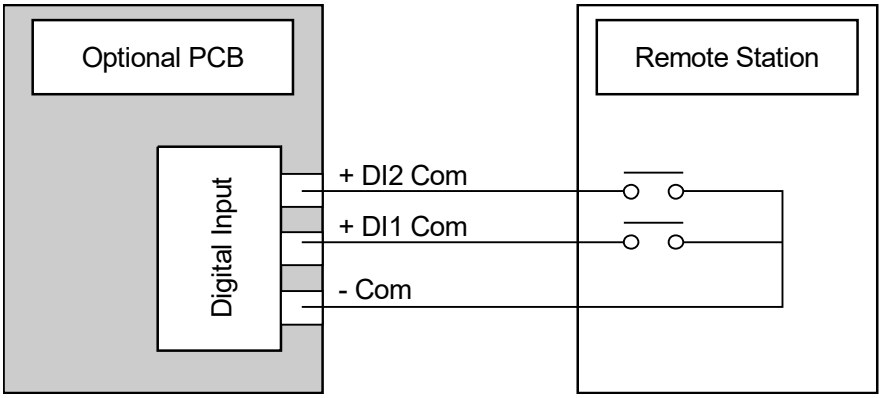

Remote control setting

For this function, following items need to be set on Remote Control (installer menu) –

- SG control = YES or NO
- Capacity up setting 1
  - Heating capacity [50 ~ 150 %]
  - DHW capacity [50 ~ 150 %]
  - Cooling capacity [-15 ~ 0 %]
- Capacity up setting 2
  - Heating capacity [50 ~ 150 %]
  - DHW capacity [50 ~ 150 %]
  - Cooling capacity [-15 ~ 0 %]

Control contents:

If SG control on remote control = "Yes", then following control only activate by digital input.

- **While Digital input is " 00 " (Normal operation)**
  - Normal operation. Once detect '00' system will operate back to normal condition.
    (All the target set temperature for heating side and DHW side will return back to previous set temperature when digital signal change from "10' or "11" back to "00".)
- **While digital input is detected " 01 " (HP stop)**
  - Heat pump & room heater & tank heater cannot operate.
    (Solar control and Boiler back up and 2 Zone control can activate.)
- **While digital input is detected " 10 " (Capacity 1)**
  - Target temperature for heating and DHW Tank is changed according to the percentage set by Remote control setting. However, which setting temperature is change depend on system setting.
  - Target water temperature of cooling is changed according to the adjustment value set by remocon setting.
- **While digital input is detected " 11 " (Capacity 2)**
  - Target temperature for heating and DHW Tank is changed according to the percentage set by Remote control setting. However, which setting temperature is change depend on system setting.
  - Target water temperature of cooling is changed according to the adjustment value set by remocon setting.
- **While digital input is detected " 10 " (Capacity 1)**
  - Setting temperature for heating and Tank is changed.
    However, which setting temperature is change depend on system setting.

If Buffer selection is "YES"
Room side
New Target Buffer tank temperature = Current Target Buffer Tank Temperature * Remote Control setting (" capacity 1) %
* Max Min regulation is follow Target Buffer tank temperature control specification
** No change of Target zone water temperature, only set higher buffer tank temperature.

DHW Tank side
New Tank Set Temperature = Tank Set Temperature * Remote Control setting for DHW ("Capacity 1) % * (Max regulation depend on the tank max setting limit)

If Buffer selection is "NO"
Room side
New Target Zone Water Temperature = Current Target Zone Water Temperature * Remote Control Setting (*Capacity 1) %
(Zone 1 and Zone 2 will change according to its own target zone water temperature.)
(Max regulation depend on the temperature control type select)

DHW Tank side
New Tank Set Temperature = Tank Set Temperature * Remote Control setting for DHW ("Capacity 1) % * (Max regulation depends on the tank max setting limit)

Setting temperature for cooling is changed
New Target water temperature = target water temperature + Remote Control setting for cool (*Capacity 1) * (Min/Max regulation of cooling water set apply)

- **While digital input is detected " 11 " (Capacity 2)**
  - Setting temperature for heating and Tank is changed.
    However, which setting temperature is change depend on system setting.

If Buffer selection is "YES"
Room side
New Target Buffer tank temperature = Current Target Buffer Tank Temperature * Remote Control setting (" capacity 2) %
* Max Min regulation is follow Target Buffer tank temperature control specification
** No change of Target zone water temperature, only set higher buffer tank temperature.

DHW Tank side
New Tank Set Temperature = Tank Set Temperature * Remote Control setting for DHW ("Capacity 2) % * (Max regulation depends on the tank max setting limit)

If Buffer selection is "NO"
Room side
New Target Zone Water Temperature = Current Target Zone Water Temperature * Remote Control Setting (*Capacity 2) %
(Zone 1 and Zone 2 will change according to it's own target zone water temperature.)
(Max regulation depend on the temperature control type select)

DHW Tank side
New Tank Set Temperature = Tank Set Temperature * Remote Control setting for DHW ("Capacity 2) % * (Max regulation depends on the tank max setting limit)
** This function is not applicable for Cooling mode.

Setting temperature for cooling is changed
New Target water temperature = target water temperature + Remote Control setting for cool (*Capacity 2) * (Min/Max regulation of cooling water set apply)

14.29 Demand Control (Optional PCB)

Remote control setting:

- When Optional PCB connection select 'YES", Demand Control function can select "YES" or "NO".

Purpose:

- After the demand control select YES, below control will activated.
  - 0-10V Demand control

<u>0-10V Demand control</u>

- Demand control is use to reduce the current usage of heat pump unit by third party device.

<u>Control start condition:</u>

- Select “YES” at Demand control at installer menu.
- 0-10V input for this electrical current control is detected.

<u>Control content:</u>

- If start condition is fulfilled, indoor will receive the voltage signal from optional PCB. Indoor will send the rate value to outdoor unit.
- Outdoor will change the current limit according to the percentage receive from indoor unit.

14.30 Holiday Mode

- Purpose:
  Promotes energy saving by allowing the user to stop the system during holiday and enables the system to resume at the preset temperature after holiday.

- Control details:
  - Indoor operate the unit according running mode request. Target temperature will follow holiday setting temperature.
    - If heat mode request is receive, Target Water Out Temperature will change according to holiday shift temperature set.
      [If heat is set OFF at holiday, unit, water pump and zone control will OFF]
    - If tank mode request is receive, Target Tank Set Temperature will change according to the holiday tank shift temperature set.
      [If tank is set OFF at holiday, heat pump and tank heater will OFF]
  - After days of holiday have been set, heat pump will stop and only resume operation at the end of holiday countdown.

- Start condition:
  - Holiday timer set and the holiday timer start
    * The day holiday mode was set is counted as day 1.

- Stop condition:
  - OFF/ON button is pressed.
  - Holiday timer is reached.

14.31 Dry Concrete

- Purpose
  Provide heat to floor heating panel and dry the wet concrete during installation.

- Setting condition:
  - Dry concrete parameter can be set through remote control under system setup.
  - Parameters are possible to set up to 99 days with different target set temperature

- Control details:
  - Dry concrete mode will be activates when select ON from service setup.
  - Once start dry concrete function, remote control will send step 1 setting temperature to indoor unit.
    * This temperature is set at zone temperature. If system is 2 zones, both zone target temperature is set as same temperature.
  - Heat pump will start heat mode operation to room side with received target water outlet temperature.
    * Heat pump will operate according to Heat pump Target Water Temperature.
  - After complete day 1 setup operation, day 2 data will be send to indoor at 12.00am on the second day.
  - Each preset data will be send every day until dry concrete mode is complete, unit will turns OFF and exit dry concrete function.
  - 3 ways valve and booster heater will turn OFF and 2 ways valve will turns ON.

- Cancel condition:
  - Dry concrete mode is complete and OFF signal is received.
  - OFF signal is received by pressing OFF/ON button.

14.32 Flow Sensor

- The water flow sensor serves as an overload protector that shuts down the unit when the water level is detected to be low.
- Abnormal flow detection:

Sequence	Abnormal flow	Normal flow
Normal case	Flow rate < 7 l/min or ≥ 69 l/min	≥ 7 l/min
During status 2~6 on Anti-freeze deice	Flow rate ≥ 7 l/min	< 7 l/min

15. Protection Control

15.1 Protection Control for All Operations

15.1.1 Time Delay Safety Control

1 The compressor will not start for three minutes after stop of operation.

15.1.2 30 Seconds Forced Operation

1 Once the compressor starts operation, it will not stop its operation for 30 seconds.
2 However, it can be stopped using control panel at indoor unit.

15.1.3 Total Running Current Control

1 When the outdoor running current exceeds X value, the compressor frequency will decrease.
2 If the outdoor running current does not exceed X value, the compressor frequency will return to normal operating frequency.
3 If the outdoor running current continue to increase till exceed Y value, compressor will stop, and if this occurs 3 times within 20 minutes, system will stop operation and OFF/ON control panel LED will blink (F16 error occurs).

	WH-UXZ09KE5		WH-UXZ12KE5	
Operation Mode	X (A)	Y (A)	X (A)	Y (A)
Heating	28.0	30.0	28.0	30.0
Cooling	19.1	30.0	19.1	30.0

A. DC Peak Current Control
1 When the current to IPM exceeds set value, compressor will stop. Compressor will restart after three minutes.
2 If the set value exceeds again for more than 30 seconds after the compressor restarts, operation will restart after two minutes.
3 If the set value exceeds again for within 30 seconds after the compressor restarts, operation will restart after one minute. If this condition repeats continuously for seven times, system will stop operation and OFF/ON control panel LED will blink (F23 error occurs).

15.1.4 Compressor Overheating Prevention Control

- The compressor operating frequency is regulated in accordance to compressor tank temperature as shown in below figures. When the compressor tank temperature exceeds 112°C, compressor will stop, and if this occurs 4 times within 30 minutes, system will stop operation and OFF/ON control panel LED will blink (F20 error occurs).

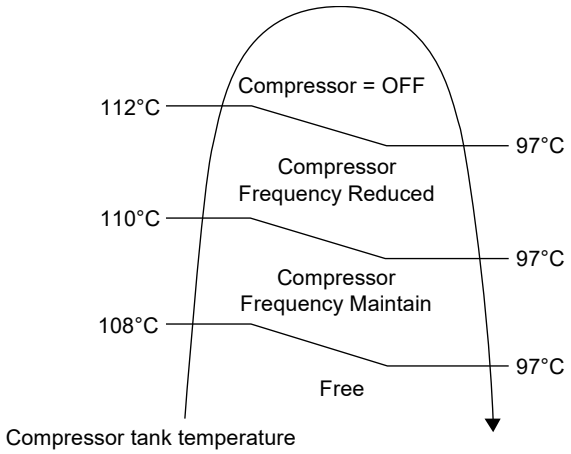

15.1.5 High Pressure Sensor Control

- Purpose:
  - To protect the system operation.
- Detection period:
  - After compressor on for 1 minute.
- Detection conditions:
  - When abnormal high voltage detection, 5 V or when open circuit detection 0V for 5 seconds continuously.
- After detection:
  - When abnormality is detected 4 times within 120 minutes, unit stop operation.
  - OFF/ON control panel LED will blink (H64 error occurs).

15.1.6 Outside Temperature Current Control

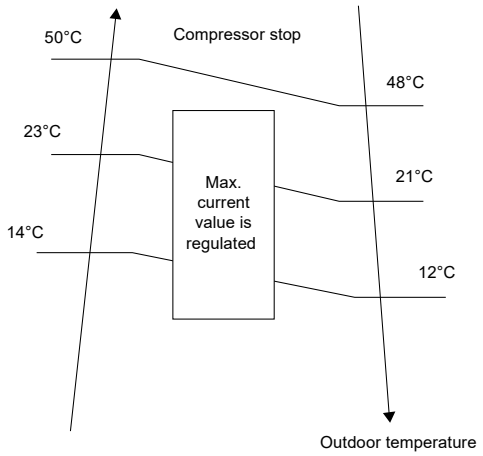

15.2 Protection Control for Heating Operation

15.2.1 Outdoor Air Temperature Control

The maximum current value is regulated when the outdoor air temperature rises above 14°C in order to avoid compressor overloading.

15.2.2 Deice Operation

When outdoor pipe temperature and outdoor air temperature is low, deice operation start where outdoor fan motor stop.
Normally, deice start if pipe sensor temperature fulfill deice condition. If remote controller set to AUTO force defrost setting, unit will start force deice after heat pump operate for 3 hours without deice at below outdoor temperature 5°C or outdoor pipe sensor temperature fulfill deice condition and Deice accumulation timer reach 2 hours.

- Deice judging condition

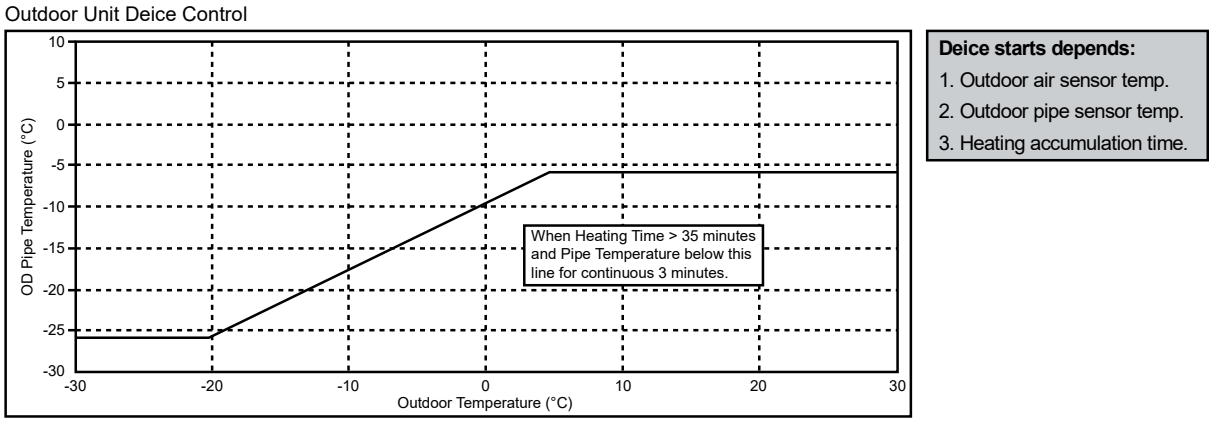

- Deice operation time diagram

a. Deice mode 1 control:

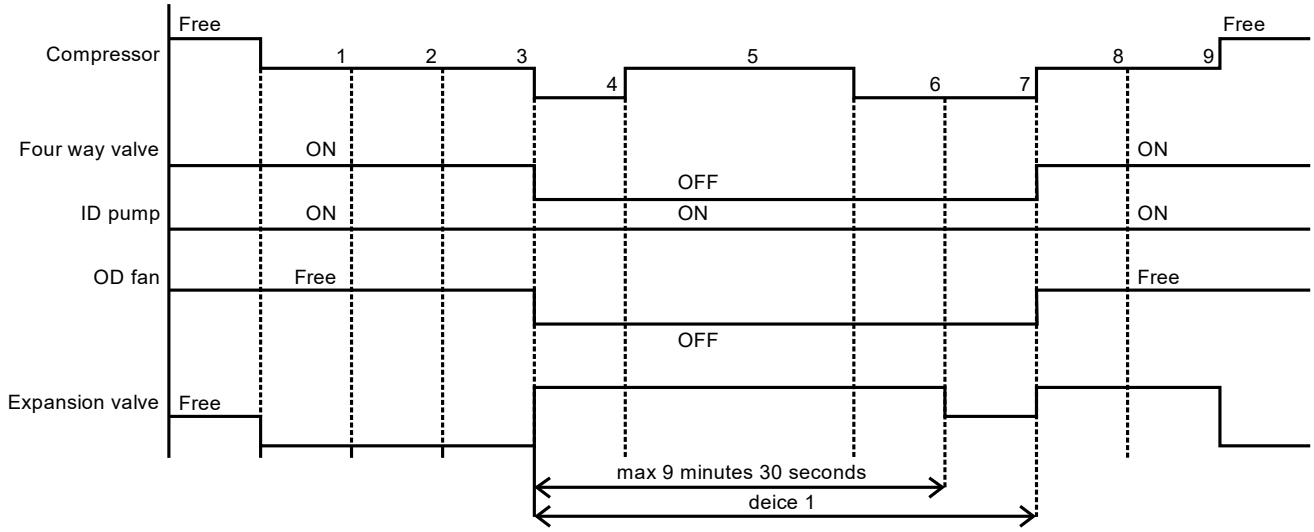

15.2.3 Force Defrost Operation

Force defrost can be set through remote control with two selection (Manual OR Auto).

- If Manual defrost set, heat pump only run force defrost at heat mode when force defrost request from quick menu remote control.
- If Auto defrost set, heat pump automatically run force defrost operation when any of below conditions is achieved :
  i) after 3 hours heating accumulation time without defrost when ambient below 5°C.
  ii) after outdoor pipe sensor temperature fulfill deice condition and Deice accumulation timer reach 2 hours.
  * Deice accumulation timer will not reset when remote control is pressed OFF.

15.3 Protection Control for Cooling Operation

15.3.1 Outdoor Air Temperature Control

- The Compressor operating frequency is regulated in accordance to the outdoor air temperature as shown in the diagram below.
- This control will begin 1 minute after the compressor starts.
- Compressor frequency will adjust base on outdoor air temperature.

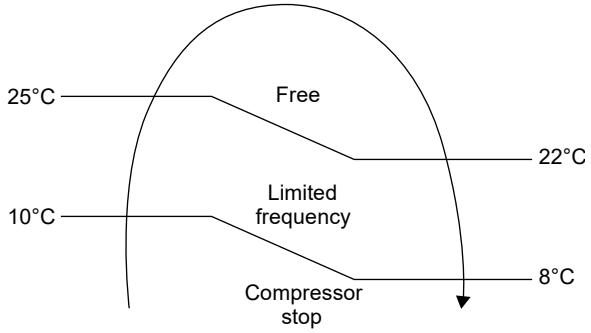

15.3.2 Freeze Prevention Control 1

1 When indoor heat exchanger temperature is lower than 0°C continuously for 10 seconds, compressor will stop operating.
2 Compressor will resume its operation three minutes after the indoor heat exchanger is higher than 1°C.
3 Indoor heat exchanger freeze prevention (H99) will memory in error history.

16. Servicing Mode

16.1 How to Take Out Front Plate

Please follow the steps below for take out front plate. Before removing the front plate of Indoor Unit, always switch off all power supply (i.e. Indoor Unit power supply, heater power supply and Tank Unit power supply).

1. Remove the 2 mounting screws which located at bottom of the front plate.
2. Gently pull the lower section of the front plate towards you to remove the front plate from left and right hooks.
3. Hold the left edge and right edge of front plate to lift up front plate from hooks.

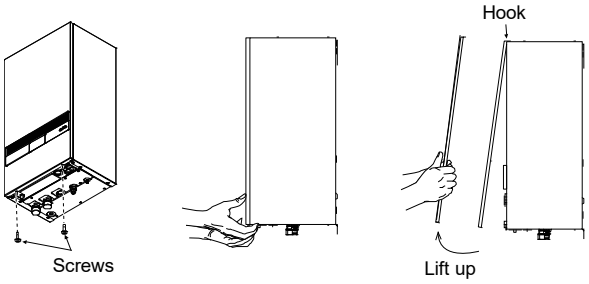

16.2 Test Run

1. Fill up the Tank Unit with water. For details refer to Tank Unit installation instruction and operation instruction.
2. Set ON to the Indoor Unit and RCCB/ELCB. Then, for control panel operation please refers to air-to-water heatpump operation instruction.

> Note:
> - During winter, turn on the power supply and standby the unit for at least 15 minutes before test run. Allow sufficient time to warm up refrigerant and prevent wrong error code judgement.

3. For normal operation, pressure sensor ⑭ reading should be in between 0.05 MPa and 0.3 MPa (0.5 bar and 3 bar).
4. After test run, please clean the Magnetic Water Filter Set ⑮. Reinstall it after finish cleaning.

16.3 Expansion Vessel ⑫ Pre Pressure Checking

[Upper limit water volume of the system]
The Indoor Unit has a build-in Expansion Vessel with 10 L air capacity and initial pressure of 1 bar.
Total amount of water in the system should be below 200 L.
If the total amount of water is more than 200 L, please add expansion vessel (field supply).
The expansion vessel capacity required for the system can be calculated from the formula below.

$$V = \frac{\varepsilon \times Vo}{1 - \frac{98 + P_1}{98 + P_2}}$$

V : Required gas volume <expansion vessel volume L>
Vo : System total water volume <L>
ε : Water expansion rate 5 → 60˚C = 0.0171
P_1 : Expansion tank filling pressure = (100) kPa
P_2 : System maximum pressure = 300 kPa

- ( ) Please confirm at actual place
- The gas volume of the sealed type expansion vessel is presented by <V>.

O It's advised to add 10% margin for required gas volume of calculation.

Water expansion rate table

Water temperature (°C)	Water expansion rate ε
10	0.0003
20	0.0019
30	0.0044
40	0.0078
50	0.0121
60	0.0171
70	0.0228
80	0.0291
90	0.0360

[Adjustment of the initial pressure of the expansion vessel when there is a difference in installation height]
If the height difference between the Indoor Unit and the highest point of the system water circuit (H) is more than 7m, please adjust the initial pressure of the expansion vessel (Pg) according to the following formula.

Pg= (H*10+30) kPa

16.4 Pump Down Procedures

Refer below steps for proper pump down procedure.

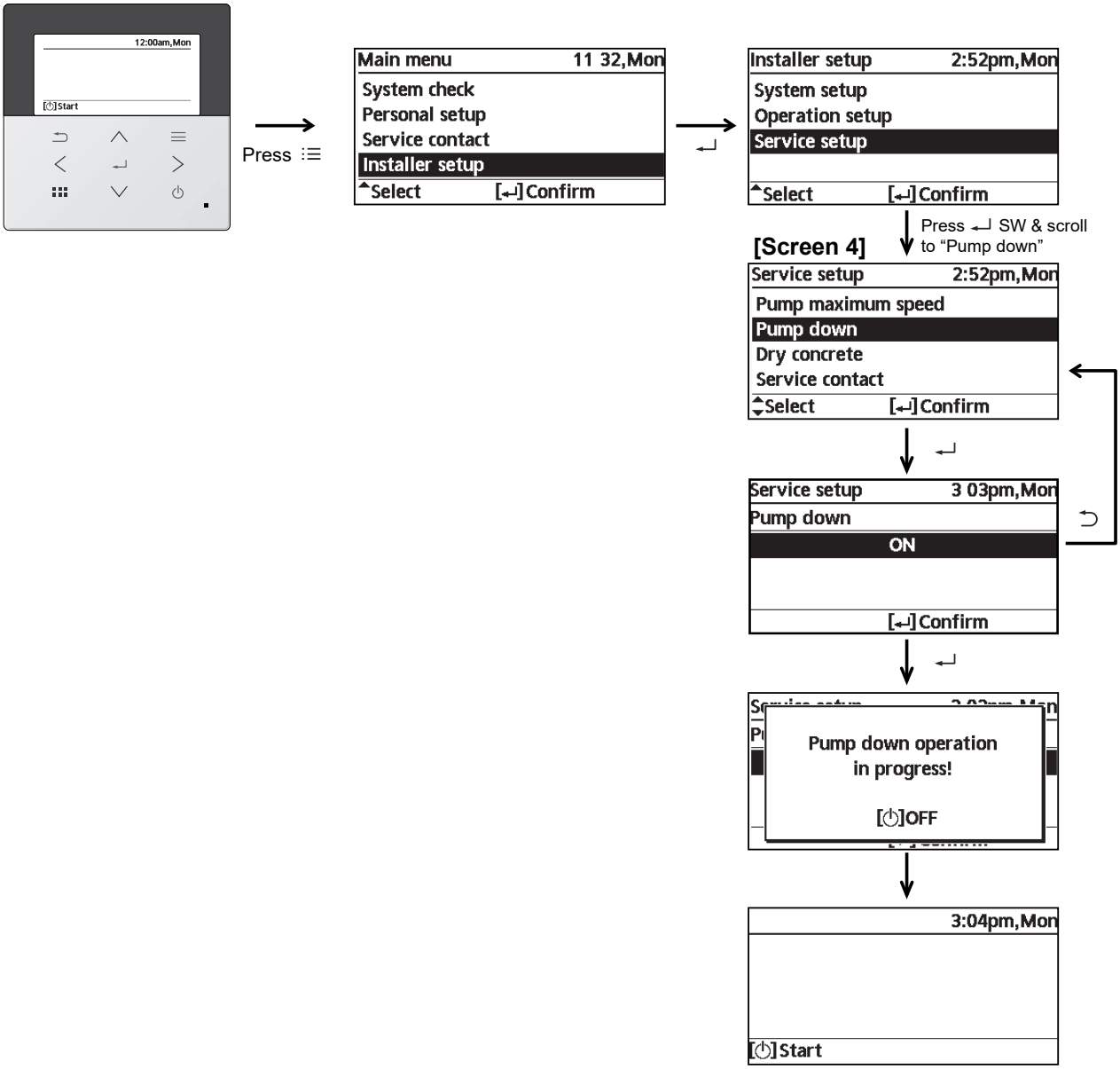

16.5 How To Adjust Pump Speed

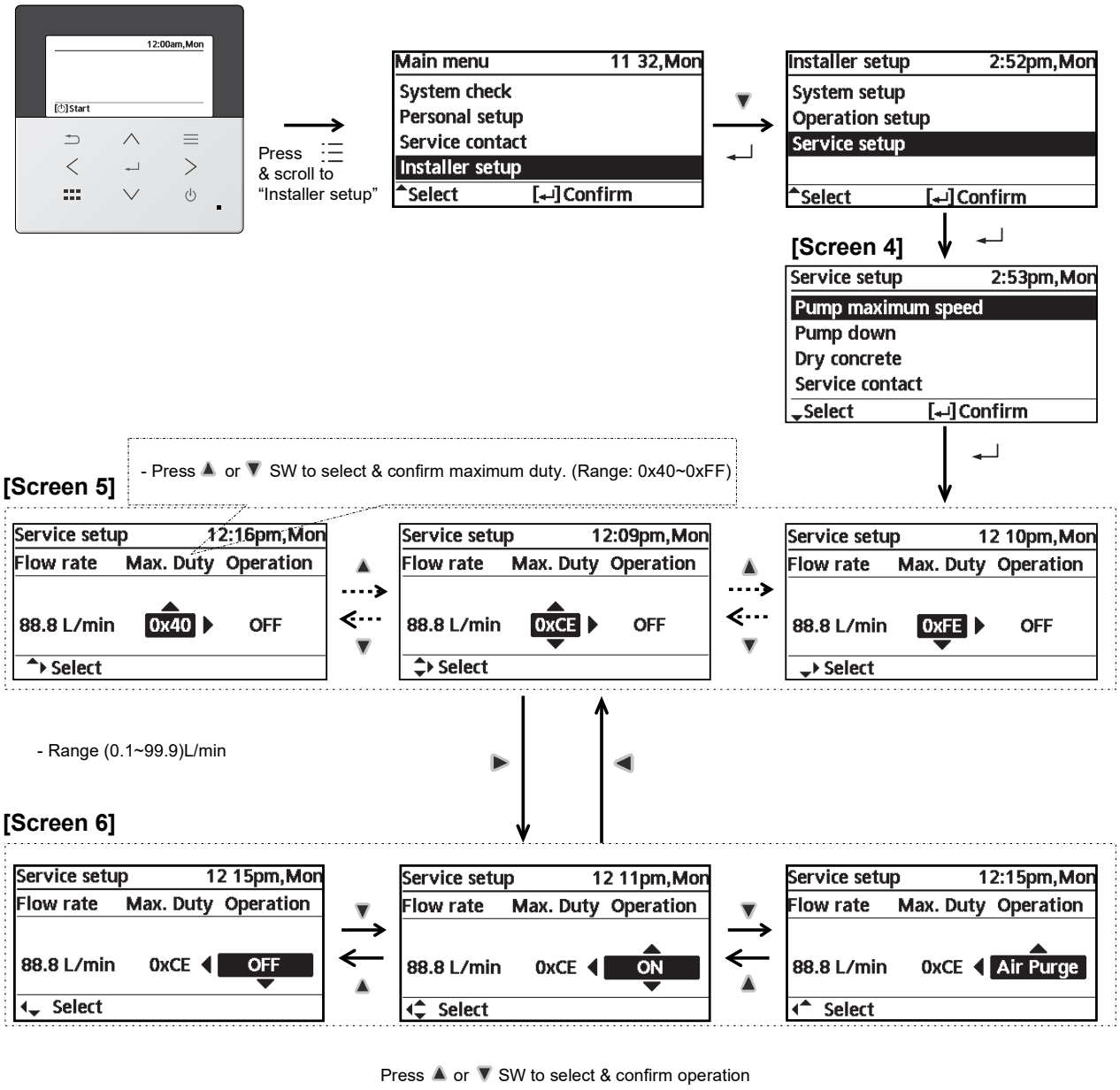

NOTE:

1. Whenever at [Screen 5], if press ⏻ SW to OFF, pump operation should be turned OFF.
2. Whenever at [Screen 6], if press ⏻ SW to OFF, pump operation should be turned OFF.

16.6 How To Unlock Cool Mode

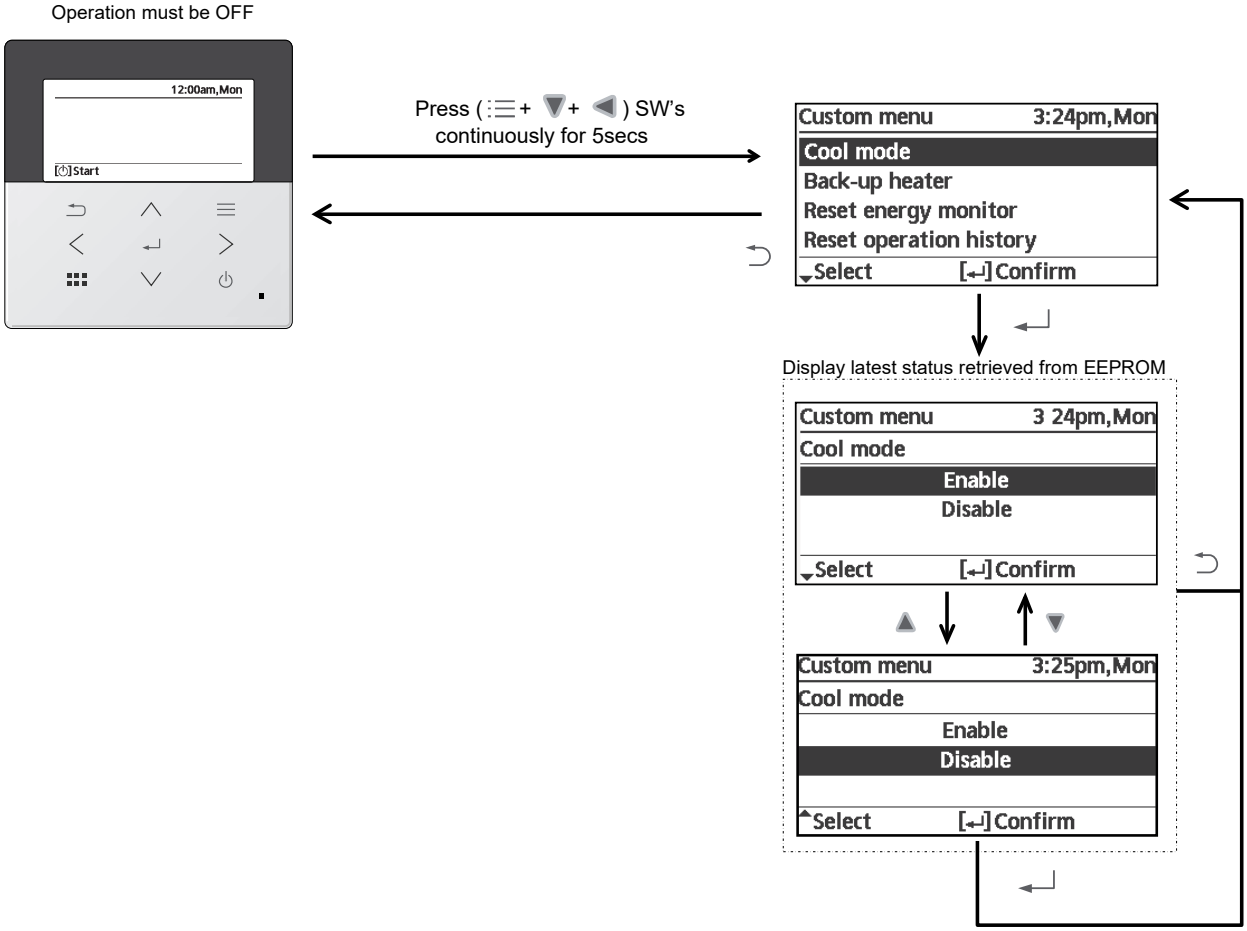

16.7 EEPROM Factory Default Data Setup Procedure

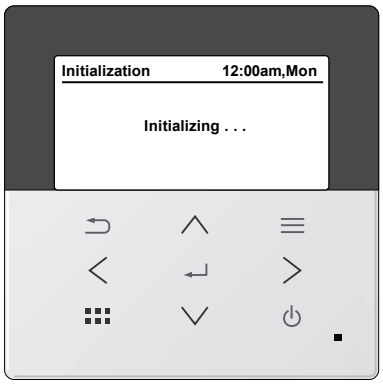

- EEPROM default data setup is only possible during initialization process.
- Press (▲, ▼, ◀, ▶) simultaneously for 5secs continuously, initialization process will stop & EEPROM default data setup process will start.

During EEPROM default data setup process, display should be as shown below.

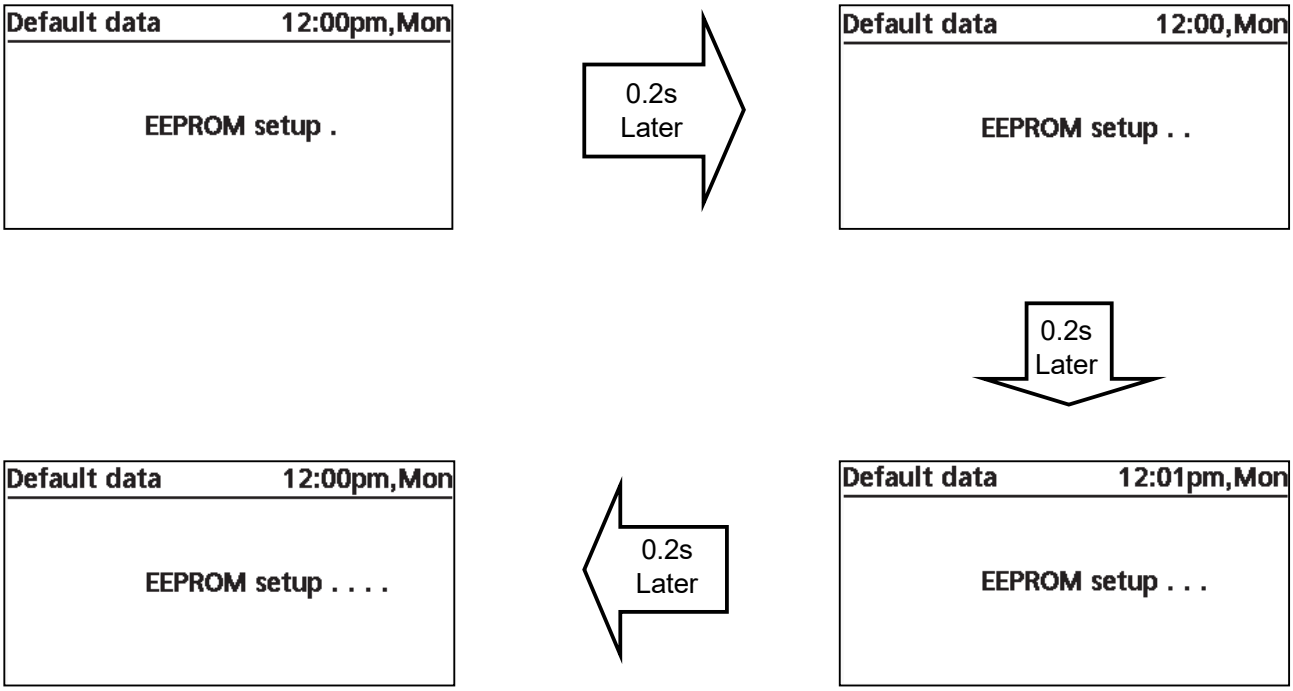

- Once EEPROM default data setup process is complete, initialization process will re-start from beginning.

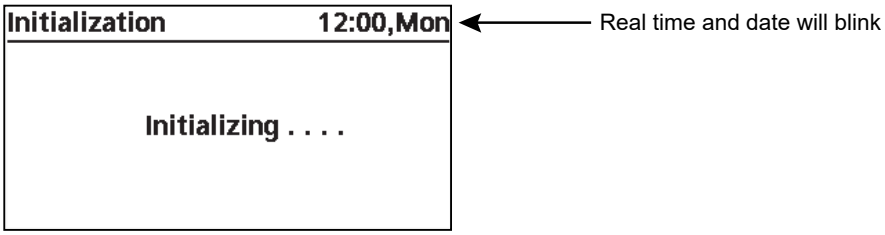

16.8 Dry Concrete Setup

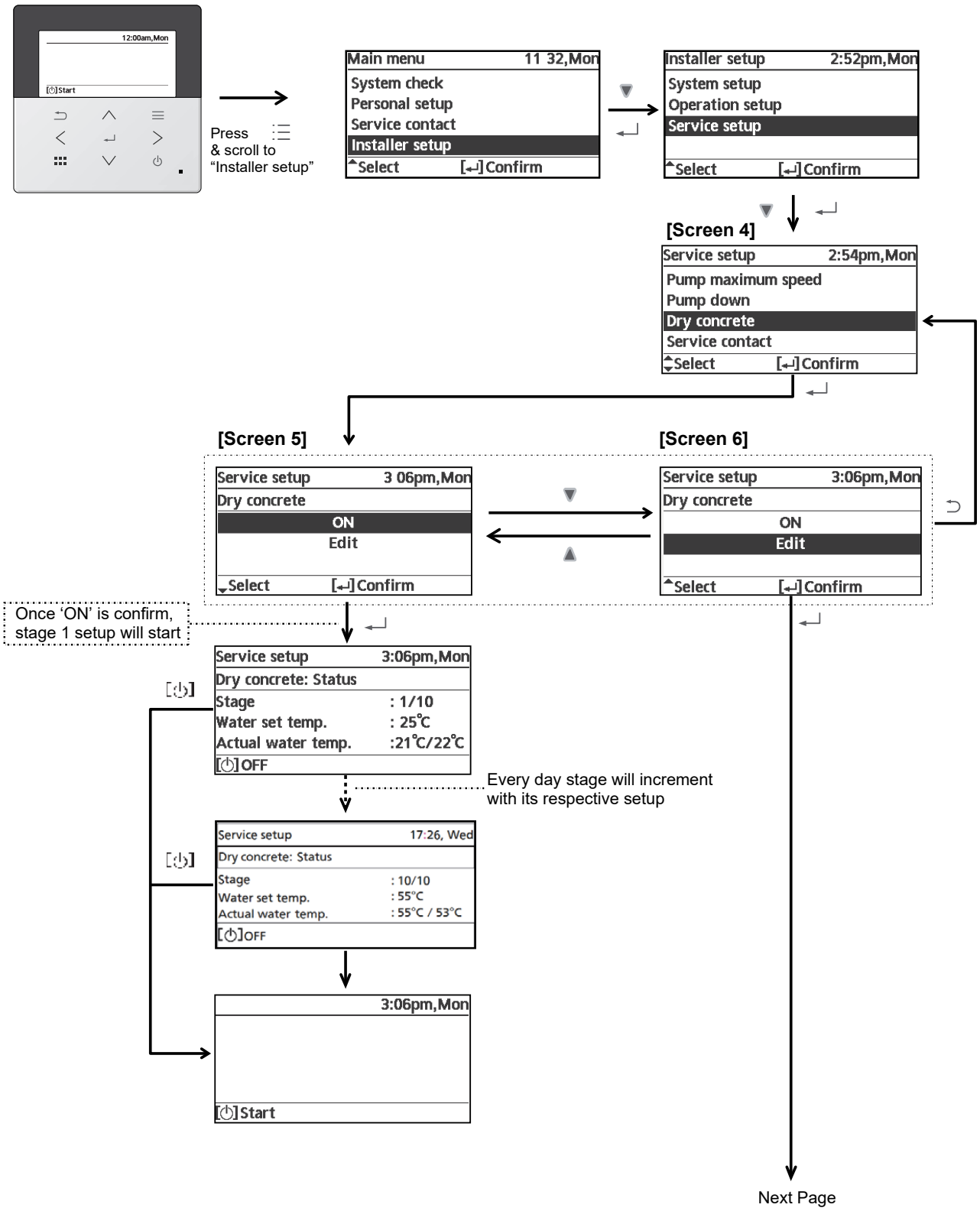

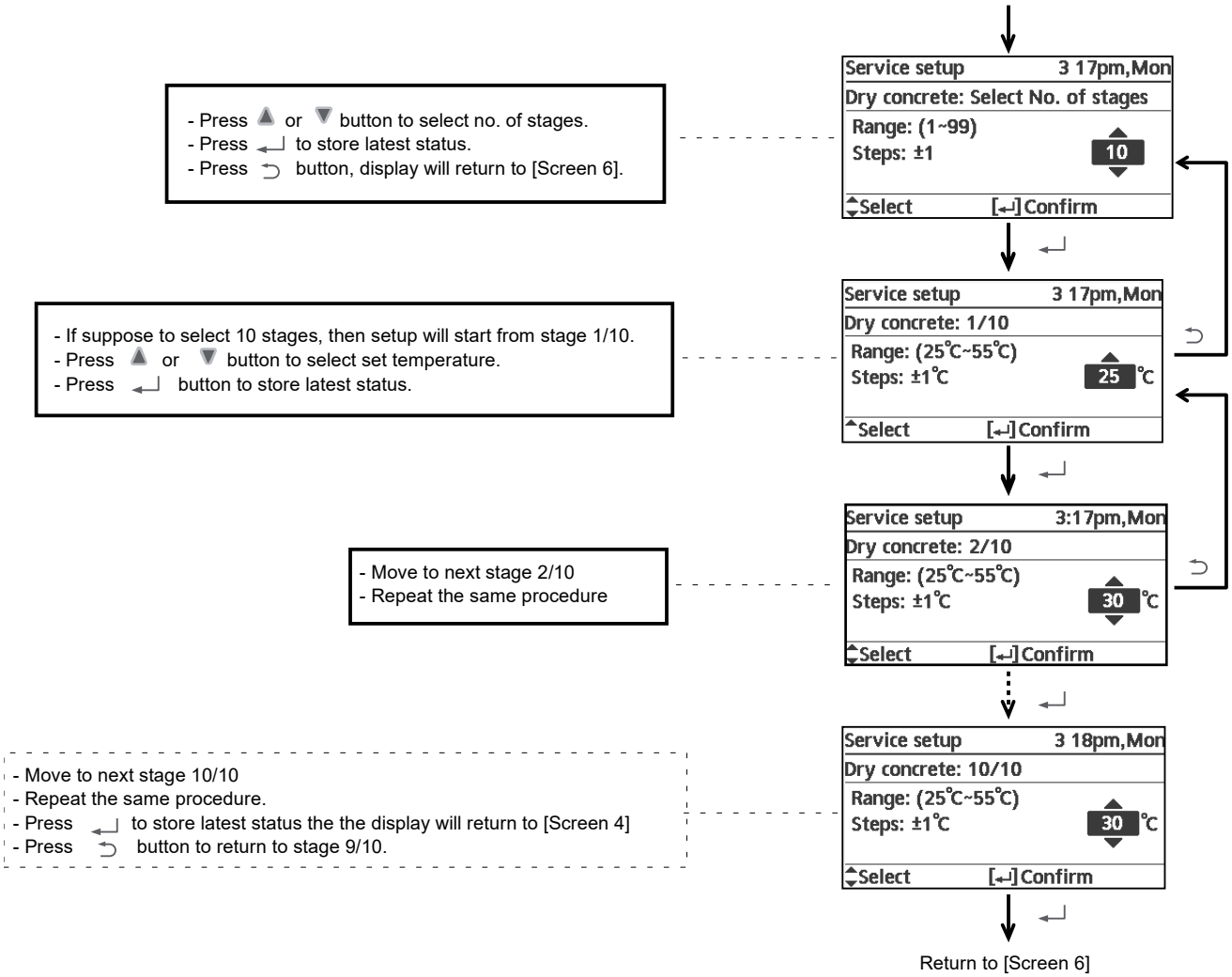
Service setup 3 17pm,Mon
Dry concrete: Select No. of stages
Range: (1~99)
Steps: ±1
10
Select [↵] Confirm
- Press ▲ or ▼ button to select no. of stages.
- Press ↵ to store latest status.
- Press ↩ button, display will return to [Screen 6].
Service setup 3 17pm,Mon
Dry concrete: 1/10
Range: (25℃~55℃)
Steps: ±1℃
25 ℃
Select [↵] Confirm
- If suppose to select 10 stages, then setup will start from stage 1/10.
- Press ▲ or ▼ button to select set temperature.
- Press ↵ button to store latest status.
Service setup 3:17pm,Mon
Dry concrete: 2/10
Range: (25℃~55℃)
Steps: ±1℃
30 ℃
Select [↵] Confirm
- Move to next stage 2/10
- Repeat the same procedure
Service setup 3 18pm,Mon
Dry concrete: 10/10
Range: (25℃~55℃)
Steps: ±1℃
30 ℃
Select [↵] Confirm
- Move to next stage 10/10
- Repeat the same procedure.
- Press ↵ to store latest status the the display will return to [Screen 4]
- Press ↩ button to return to stage 9/10.
Return to [Screen 6]

17. Maintenance Guide

In order to ensure safety and optimal performance of the unit, seasonal inspections on the unit, functional check of RCCB/ELCB, field wiring and piping have to be carried out at regular intervals. This maintenance should be carried out by authorized dealer. Contact dealer for scheduled inspection.

1. Charging the Water
   Make sure all the piping installations are properly done before carry out below steps.
   a. Turn the plug on the Air Purge Valve ⑨ outlet anticlockwise by one complete turn from fully closed position.

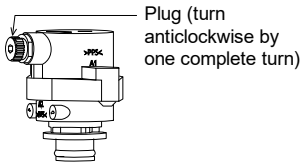

Air purge valve ⑨

   b. Set the Pressure Relief Valve ⑬ lever “DOWN”.

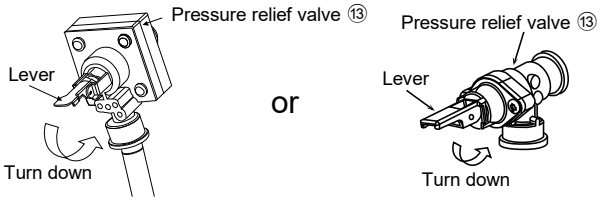

Pressure relief valve ⑬ Pressure relief valve ⑬

   c. Start filling water (with pressure more than 0.1 MPa (1 bar)) to the Indoor Unit via water inlet. Stop filling water if the free water flow through Pressure Relief Valve drain hose.
   d. Turn ON the power supply and make sure Water Pump ⑯ is running.
   e. Check and make sure no water leaking at the tube connecting points.
   f. The water may drip from this discharge hose. Therefore must guide the hose without close or block the outlet of the hose.

⚠ WARNING
Be sure to switch off all power supply before performing each of the below checkings. Before obtaining access to terminals, all supply circuits must be disconnected.

2. Check Pressure Relief Valve ⑬
   a. Check for correct operation of Pressure Relief Valve ⑬ by turning on the lever to become horizontal.
   b. If you do not hear a clacking sound (due to water drainage), contact your local authorized dealer.
   c. Push down the lever after finish checking.
   d. In case the water keeps drained out from the unit, switch off the system, and then contact your local authorized dealer.

3. Air Purge Valve
   Air purge valve must be installed at all high points in a closed water circuit system.
   An automatic air purge valve is provided inside the indoor unit. To automatically purge the air from the system, turn the plug on the air purge valve outlet anticlockwise by one complete turn from fully closed position.
   Excessive air is automatically purged if the plug is kept in this position.

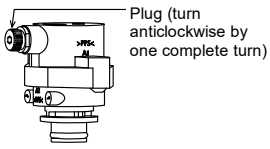

Air purge valve

4. Indoor Unit Control Board Area
   Thorough visual inspection of the control board and look for defects, i.e. loose connection, melting of wire insulator and etc.

5. Check RCCB/ELCB
   Ensure the RCCB/ELCB set to “ON” condition before check RCCB/ELCB.
   Turn on the power supply to the Indoor Unit.
   This testing could only be done when power is supplied to the Indoor Unit.

⚠ WARNING
Be careful not to touch parts other than RCCB/ELCB test button when the power is supplied to Indoor Unit. Else, electrical shock may happen. Before obtaining access to terminals, all supply circuits must be disconnected.

   a. Push the “TEST” button on the RCCB/ELCB. The lever would turn down and indicate “0”, if it functions normal.
   b. Contact authorized dealer if the RCCB/ELCB malfunction.
   c. Turn off the power supply to the Indoor Unit.
   d. If RCCB/ELCB functions normal, set the lever to “ON” again after testing finish.

6. Reset Overload Protector
   Overload Protector serves the safety purpose to prevent the water over heating. When the Overload Protector trip at high water temperature, take below steps to reset it.
   a. Take out the cover.
   b. Use a test pen to push the centre button gently in order to reset the Overload Protector.
   c. Fix the cover to the original fixing condition.

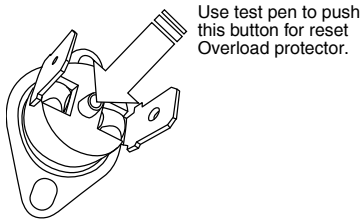

7. Maintenance for Magnetic Water Filter Set
   a. Turn OFF power supply.
   b. Place a container below Magnetic Water Filter Set.
   c. Turn to remove the Magnet Bar at bottom of Magnetic Water Filter Set.
   d. By using Allen key (8mm), remove the Cap of Discharge Port.
   e. By using Allen Key (4mm), open the Service Valve to release the dirty water from the Discharge Port into a container. Close the service valve when the container is full to avoid spillage in the tank unit. Dispose the dirty water.
   f. Reinstall the Cap of Discharge Port and Magnet Bar.
   g. Re-charging the water to Space Heating / Cooling circuit if necessary (refer Section 5 for details.)
   h. Turn ON power supply.

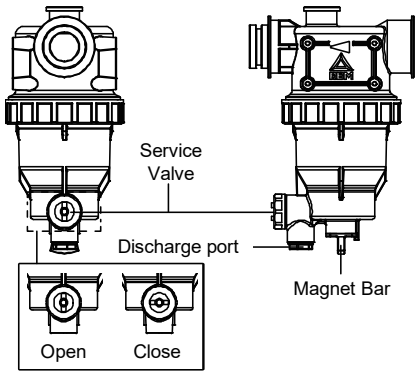

8. Proper pump down procedure

⚠ WARNING
Strictly follow the steps below for proper pump down procedure. Explosion may occur if the steps are not followed as per sequence. 1. When the Indoor Unit is not in operation (standby), enter the Service setup menu in the Remote Controller and select Pump down operation to turn it ON. (See APPENDIX for detail) 2. After 10~15 minutes, (after 1 or 2 minutes in case very low ambient temperature (< 10°C)), fully close 2 way valve on Outdoor Unit. 3. After 3 minutes, fully close 3 way valve on Outdoor Unit. 4. Press the “OFF/ON” switch on the Remote Controller ③ to stop pump down operation. 5. Remove the refrigerant piping.

17.1 Maintenance for Magnetic Water Filter Set

If forget Password and cannot operate remote controller

Press ⮌ + ↵ + ▶ for 5 sec.
Password unlock screen appears, press Confirm and it shall reset.
Password will become 0000. Please reset it again.
(NOTE) Only display when it is locked by password.

17.1.1 Maintenance Menu

Setting method of Maintenance menu

Maintenance menu	12:00am,Mon
Actuator check	
Test mode	
Sensor setup	
Reset password	
▼ Select	[↵] Confirm

Press ⮌ + ↵ + ▶ for 5 sec.

Items that can be set

① Actuator check (Manual ON/OFF all functional parts)
(NOTE) As there is no protection action, please be careful not to cause any error when operating each part (do not turn on pump when there is no water etc.)

② Test mode (Test run)
Normally it is not used.

③ Sensor setup (offset gap of detected temp of each sensor within -2~2°C range)
(NOTE) Please use only when sensor is deviated. It affects temperature control.

④ Reset password (Reset password)

17.1.2 Custom Menu

Setting method of Custom menu

Custom menu	12:00am,Mon
Cool mode	
Back-up heater	
Reset energy monitor	
Reset operation history	
▼ Select	[↵] Confirm

Please press ☰ + ▼ + ◀ for 10 sec.

Items that can be set

① Cool mode (Set With/Without Cooling function) Default is without
(NOTE) As with/without Cool mode may affect electricity application, please be careful and do not simply change it.
In Cool mode, please be careful if piping is not insulated properly, dew may form on pipe and water may drip on the floor and damage the floor.

② Backup heater (Use/Do not use Backup heater)
(NOTE) It is different from to use/not to use backup heater set by client. When this setting is used, heater power on due to protection against frost will be disabled. (Please use this setting when it is required by utility company.)
By using this setting, it cannot defrost due to low Heating's setting temp and operation may stop (H75)
Please set under the responsibility of installer.
When it stops frequently, it may be due to insufficient circulation flow rate, setting temp of heating is too low etc.

③ Reset energy monitor (delete memory of Energy monitor)
Please use when moving house and handover the unit.

④ Reset operation history (delete memory of operation history)
Please use when moving house and handover the unit.

17.1.3 Check Water Pressure from Remote Controller

1. Press SW and scroll to "System check".
2. Press and scroll to "System information".
3. Press and search for "Water pressure".

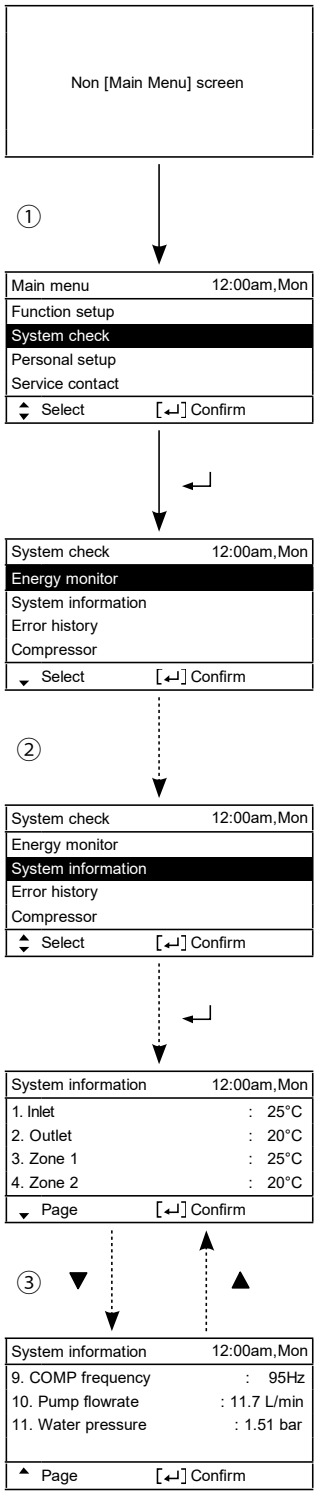

Screens shown are for illustration purposes only.

17.1.4 Specifications

17.1.4.1 Specifications of fresh water was heat transfer medium in brazed heat exchanger

Parameter	Quality Limits for Tap Water on the Secondary Side
Temperature	Below 60°C
pH	7 to 9
Alkalinity	60mg/l <HCO_3 <300mg/l
Conductivity	< 500µS/cm
Hardness	[Ca^+, Mg^+] / [HCO_3^-] > 0.5
Chloride	< 200mg/l at 60°C
Sulphate	[SO_4^{2-}] > 100mg/l and [HCO_3^-] / [SO_4^{2-}] > 1
Nitrate	NO_3 < 100mg/l
Chlorine	< 0.5mg/l

17.1.4.2 External filter

Solids in the water must be filtered.
Minimum filter mesh size required for the field supply external filter in the water inlet is 20 mesh.

18. Troubleshooting Guide

18.1 Refrigeration Cycle System

In order to diagnose malfunctions, make sure that there are no electrical problems before inspecting the refrigeration cycle.
Such problems include insufficient insulation, problem with the power source, malfunction of a compressor and a fan.
The normal pressure of the refrigeration cycle depends on various conditions, the standard values for them are shown in the table on the right.

Normal Pressure (Standard)

	Gas pressure MPa (kg/cm²G)
Heating Mode	2.3 ~ 2.9 (23 ~ 29)
Cooling Mode	0.9 ~ 1.2 (9 ~ 12)

★Condition:
- Outdoor temperature 7°C at heating mode and 35°C at cooling mode.
- Compressor operates at rated frequency.

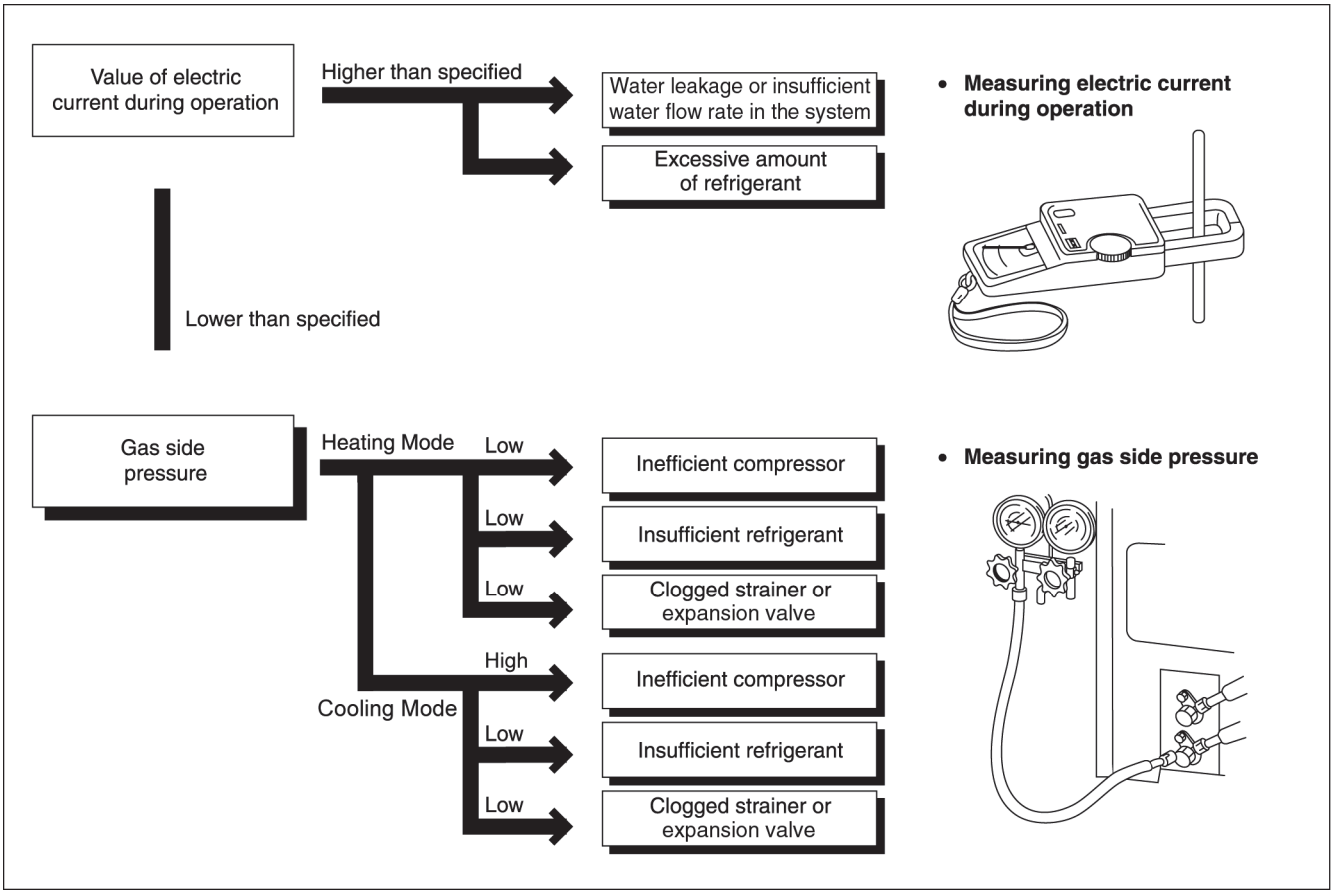

18.2 Relationship between the Condition of the Air-to-Water Heatpump Indoor and Outdoor Units and Pressure and Electric Current

Condition of the Air-to-Water Heatpump indoor and outdoor units	Heating Mode			Cooling Mode		
	Low Pressure	High Pressure	Electric current during operation	Low Pressure	High Pressure	Electric current during operation
Water leakage or insufficient water flow rate in the system	↗	↗	↗	↘	↘	↘
Excessive amount of refrigerant	↗	↗	↗	↘	↘	↘
Inefficient compression	↗	↘	↘	↗	↘	↘
Insufficient refrigerant (gas leakage)	↘	↘	↘	↘	↘	↘
Outdoor heat exchange deficiency	↘	↘	↘	↗	↗	↗
Clogged expansion valve or Strainer	↘	↗	↗	↗	↘	↘

- Carry out the measurements of pressure, electric current, and temperature fifteen minutes after an operation is started.

18.3 Breakdown Self Diagnosis Function

18.3.1 Self Diagnosis Function (Three Digits Alphanumeric Code)

- When abnormality occur during operation, the system will stop operation, and OFF/ON control panel LED will blink and error code will display on the control panel.
- Even error code is reset by turning OFF power supply or by selecting ERROR RESET, if the system abnormality is still unrepaired, system will again stop operation, and OFF/ON control panel LED will again blinks and error code will be display.
- The error code will store in IC memory.

- **To check the error code**
  - When an abnormality occurs, system will stop operation and OFF/ON control panel LED will blink.
  - Error code of the abnormality will be display on the control panel.
  - To determine the abnormality description, the error code table needs to be referred.

eg:

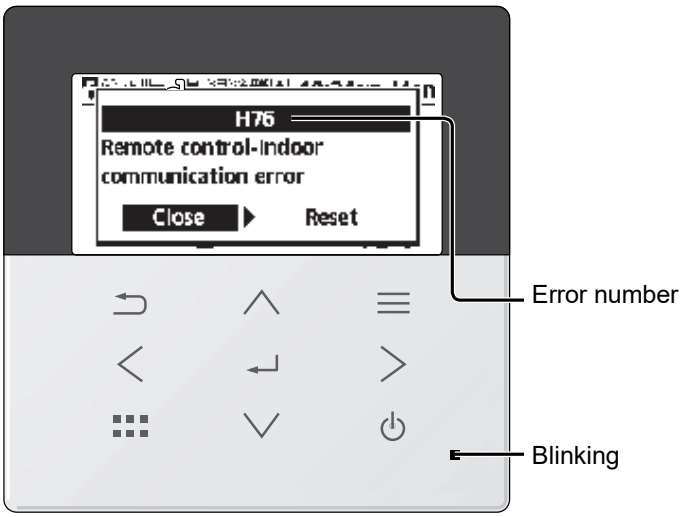

Press < > to select Close / Reset then press ↵

- **To display past/last error code**
  - Turn ON power supply.
  - Refer below procedure to retrieve the error code history.

- **To permanently delete error code from IC memory**
  - Turn ON power supply.
  - Refer below procedure to clear error history.

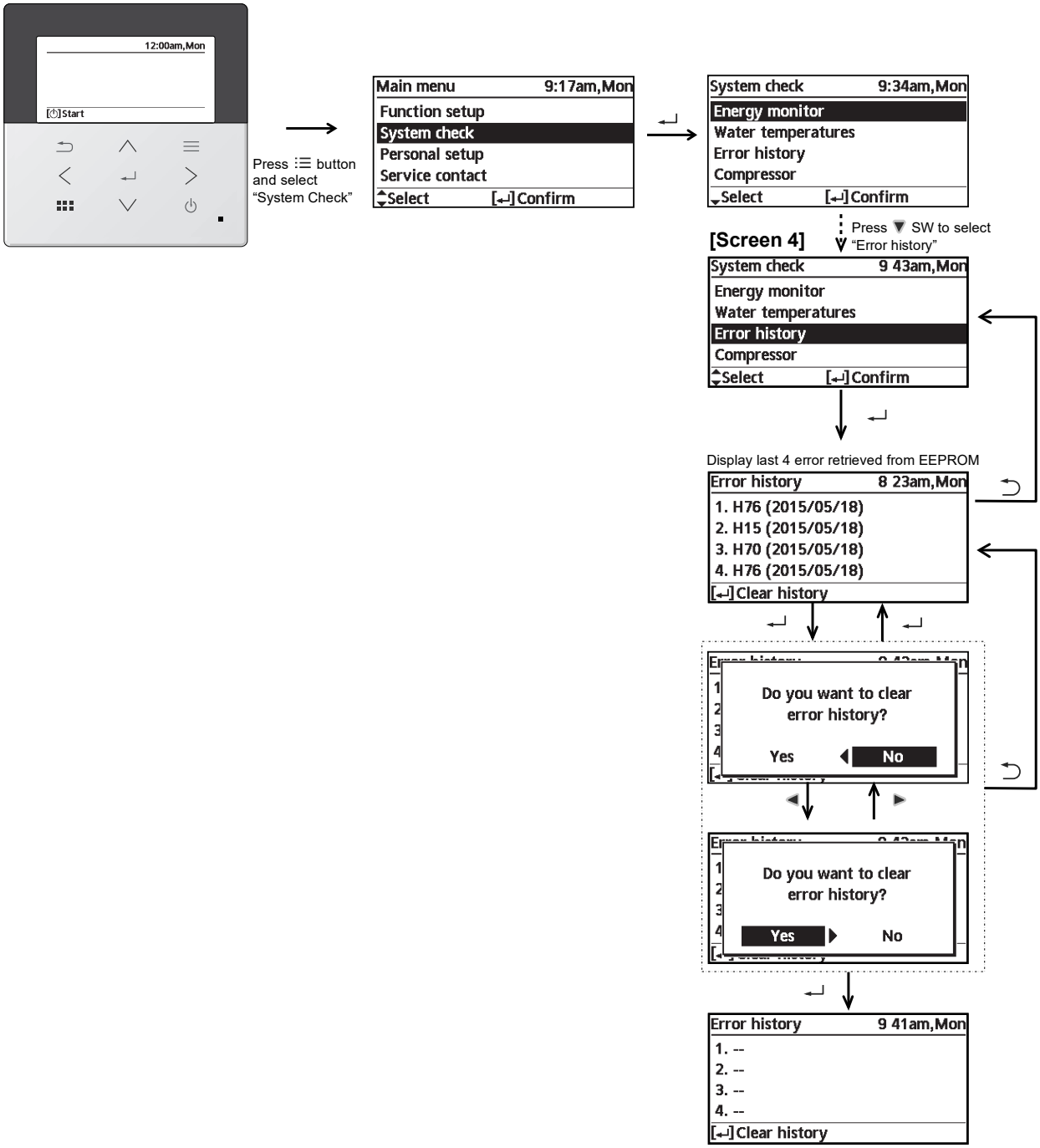
12:00am,Mon
Start
Press button and select "System Check"
Main menu 9:17am,Mon
Function setup
System check
Personal setup
Service contact
Select [↵] Confirm
System check 9:34am,Mon
Energy monitor
Water temperatures
Error history
Compressor
Select [↵] Confirm
[Screen 4]
Press SW to select "Error history"
System check 9 43am,Mon
Energy monitor
Water temperatures
Error history
Compressor
Select [↵] Confirm
Display last 4 error retrieved from EEPROM
Error history 8 23am,Mon
1. H76 (2015/05/18)
2. H15 (2015/05/18)
3. H70 (2015/05/18)
4. H76 (2015/05/18)
[↵] Clear history
Do you want to clear error history?
Yes
No
Do you want to clear error history?
Yes
No
Error history 9 41am,Mon
1. --
2. --
3. --
4. --
[↵] Clear history

18.4 Error Codes Table

Diagnosis display	Abnormality/Protection control	Abnormality judgement	Primary location to verify
H00	No abnormality detected	—	—
H12	Indoor/Outdoor capacity unmatched	90s after power supply	• Indoor/outdoor connection wire • Indoor/outdoor PCB • Specification and combination table in catalogue
H15	Outdoor compressor temperature sensor abnormality	Continue for 5 sec.	• Compressor temperature sensor (defective or disconnected)
H20	Water pump abnormality	Continue for 10 sec.	• Indoor PCB • Water pump (malfunction)
H23	Indoor refrigerant liquid temperature sensor abnormality	Continue for 5 sec.	• Refrigerant liquid temperature sensor (defective or disconnected)
H27	Service valve error	Continue for 5 minutes	• High pressure sensor (defective or disconnected)
H28	Abnormal solar sensor	Continue for 5 sec.	• Solar temperature sensor (defective or disconnected)
H31	Abnormal swimming pool sensor	Continue for 5 sec.	• Pool temperature sensor (defective or disconnected)
H36	Abnormal buffer tank sensor	Continue for 5 sec.	• Buffer tank sensor (defective or disconnected)
H38	Brand code not match	When indoor and outdoor brand code not same	—
H42	Compressor low pressure abnormality	—	• Outdoor pipe temperature sensor • Clogged expansion valve or strainer • Insufficient refrigerant • Outdoor PCB • Compressor
H43	Abnormal Zone 1 sensor	Continue for 5 sec.	• Water temperature Zone 1 sensor
H44	Abnormal Zone 2 sensor	Continue for 5 sec.	• Water temperature Zone 2 sensor
H62	Water flow switch abnormality	Continue for 1 min.	• Water flow switch
*H63	Refrigerant low pressure abnormality	Continue for 5 sec.	• Outdoor low pressure sensor (defective or disconnected)
H64	Refrigerant high pressure abnormality	Continue for 5 sec.	• Outdoor high pressure sensor (defective or disconnected)
*H65	Deice circulation error	Continue for 10 sec.	• Water flow switch sensor (defective or disconnected) • Water pump malfunction • Buffer tank (is used)
H67	Abnormal External Thermistor 1	Continue for 5 sec.	• Room temperature Zone 1 sensor
H68	Abnormal External Thermistor 2	Continue for 5 sec.	• Room temperature Zone 2 sensor
H70	Back-up heater OLP abnormality	Continue for 60 sec.	• Back-up heater OLP (Disconnection or activated)
H72	Tank sensor abnormal	Continue for 5 sec.	• Tank sensor
H74	PCB communication error	Communication or transfer error	• Indoor main PCB and Sub PCB
H75	Low water temperature control	Room heater disable and deice request to operate under low water temperature	• Heater operation must enable to increase water temperature
H76	Indoor - control panel communication abnormality	—	• Indoor - control panel (defective or disconnected)
H90	Indoor/outdoor abnormal communication	> 1 min after starting operation	• Internal/external cable connections • Indoor/Outdoor PCB
H91	Tank heater OLP abnormality	Continue for 60 sec.	• Tank heater OLP (Disconnection or activated)
H95	Indoor/Outdoor wrong connection	—	• Indoor/Outdoor supply voltage
H98 / F95	Outdoor high pressure overload protection Cooling high pressure overload protection	—	• Outdoor high pressure sensor • Water pump or water leakage • Clogged expansion valve or strainer • Excess refrigerant • Outdoor PCB
H99	Indoor heat exchanger freeze prevention	—	• Indoor heat exchanger • Refrigerant shortage
F12	Pressure switch activate	4 times occurrence within 20 minutes	• Pressure switch
F14	Outdoor compressor abnormal revolution	4 times occurrence within 20 minutes	• Outdoor compressor
F15	Outdoor fan motor lock abnormality	2 times occurrence within 30 minutes	• Outdoor PCB • Outdoor fan motor
F16	Total running current protection	3 times occurrence within 20 minutes	• Excess refrigerant • Outdoor PCB

Diagnosis display	Abnormality/Protection control	Abnormality judgement	Primary location to verify
F20	Outdoor compressor overheating protection	4 times occurrence within 30 minutes	• Compressor tank temperature sensor • Clogged expansion valve or strainer • Insufficient refrigerant • Outdoor PCB • Compressor
F22	IPM (power transistor) overheating protection	3 times occurrence within 30 minutes	• Improper heat exchange • IPM (Power transistor)
F23	Outdoor Direct Current (DC) peak detection	7 times occurrence continuously	• Outdoor PCB • Compressor
F24	Refrigeration cycle abnormality	2 times occurrence within 20 minutes	• Insufficient refrigerant • Outdoor PCB • Compressor low compression
F25	Cooling/Heating cycle changeover abnormality	4 times occurrence within 30 minutes	• 4-way valve • V-coil
F27	Pressure switch abnormality	Continue for 1 min.	• Pressure switch
F29	Low Discharge Superheat	1 times occurrence within 2550 minutes	• Discharge Temperature Sensor • Discharge Pressure Sensor • Pressure Switch • Outdoor PCB
F30	Water outlet sensor 2 abnormality	Continue for 5 sec.	• Water outlet sensor 2 (defective or disconnected)
F32	Abnormal Internal Thermostat	Continue for 5 sec.	• Control panel PCB thermostat
F36	Outdoor air temperature sensor abnormality	Continue for 5 sec.	• Outdoor air temperature sensor (defective or disconnected)
F37	Indoor water inlet temperature sensor abnormality	Continue for 5 sec.	• Water inlet temperature sensor (defective or disconnected)
F40	Outdoor discharge pipe temperature sensor abnormality	Continue for 5 sec.	• Outdoor discharge pipe temperature sensor (defective or disconnected)
F41	PFC control	4 times occurrence within 10 minutes	• Voltage at PFC
F42	Outdoor heat exchanger temperature sensor abnormality	Continue for 5 sec.	• Outdoor heat exchanger temperature sensor (defective or disconnected)
F43	Outdoor defrost sensor abnormality	Continue for 5 sec.	• Outdoor defrost sensor (defective or disconnected)
F45	Indoor water outlet temperature sensor abnormality	Continue for 5 sec.	• Water outlet temperature sensor (defective or disconnected)
F46	Outdoor Current Transformer open circuit	—	• Insufficient refrigerant • Outdoor PCB • Compressor low
F48	Outdoor EVA outlet temperature sensor abnormality	Continue for 5 sec.	• Outdoor EVA outlet temperature sensor (defective or disconnected)
F49	Outdoor bypass outlet temperature sensor abnormality	Continue for 5 sec.	• Outdoor bypass outlet temperature sensor (defective or disconnected)

Note: * This error code is not applicable for this system.

18.5 Self-diagnosis Method

18.5.1 Connection Capability Rank Abnormality (H12)

Malfunction Decision Conditions:

During startup operation of cooling and heating, the capability rank of indoor checked by the outdoor is used to determine connection capability rank abnormality.

Malfunction Caused:

1 Wrong model interconnected.
2 Wrong indoor unit or outdoor unit PCB (main) used.
3 Faulty indoor unit or outdoor unit PCB (main).

Abnormality Judgment:

Continue for 90 seconds.

Troubleshooting:

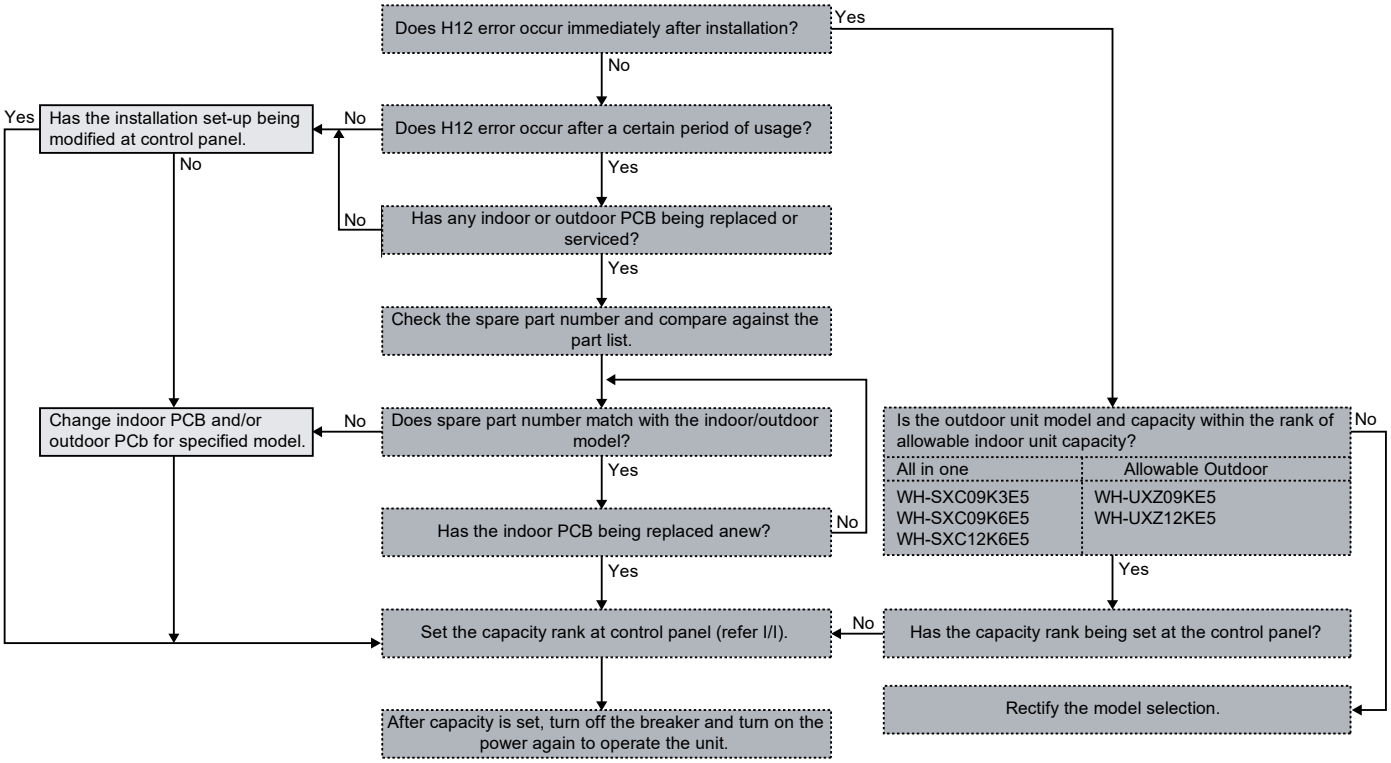

18.5.2 Compressor Tank Temperature Sensor Abnormality (H15)

Malfunction Decision Conditions:

During startup and operation of cooling and heating, the temperatures detected by the compressor tank temperature sensor are used to determine sensor error.

Malfunction Caused:

1 Faulty connector connection.
2 Faulty sensor.
3 Faulty outdoor unit PCB (main).

Abnormality Judgment:

Continue for 5 seconds.

Troubleshooting:

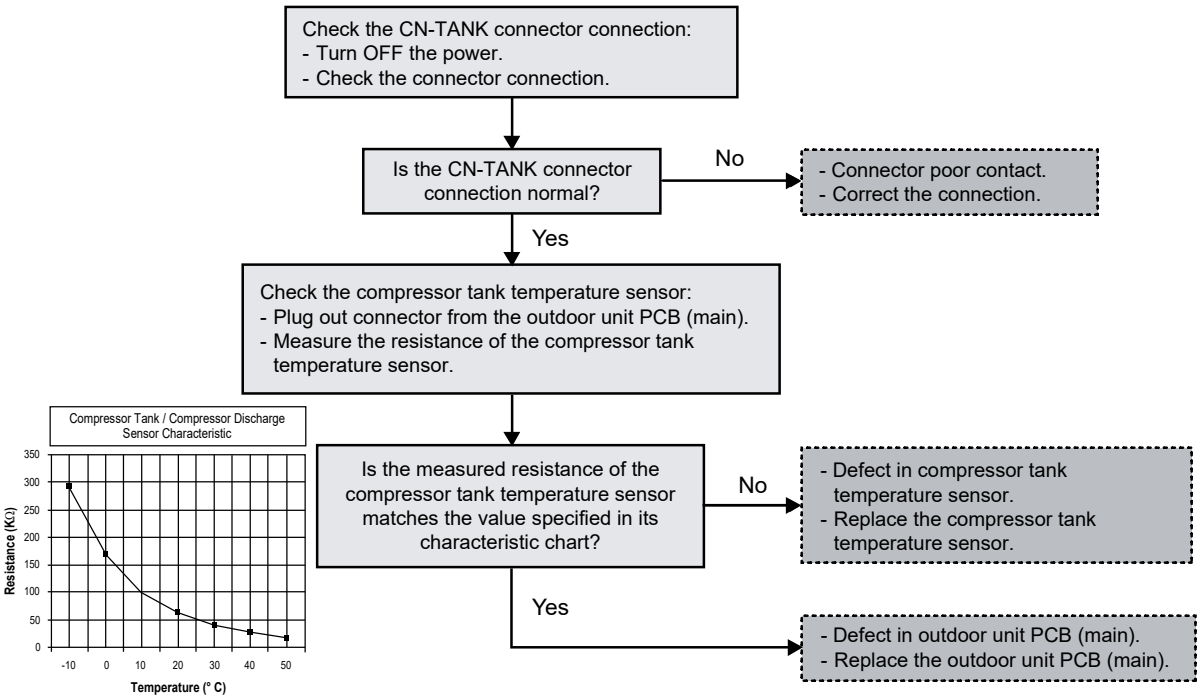

18.5.3 Water Pump Abnormality (H20)

Malfunction Decision Conditions:

During startup and operation of cooling and heating, the rotation speed detected by the IPM of water pump motor during water pump operation is used to determine abnormal water pump (feedback of rotation > 6,000rpm or < 1,000rpm).

Malfunction Caused:

1 Operation stop due to short circuit inside the water pump motor winding.
2 Operation stop due to breaking of wire inside the water pump motor.
3 Operation stop due to breaking of water pump lead wires.
4 Operation stop due to water pump motor IPM malfunction.
5 Operation error due to faulty indoor unit PCB.

Abnormality Judgment:

Continue for 5 seconds.

Troubleshooting:

Caution For safety reason and to prevent component breakdown, always switch off the power before remove and connect the component.

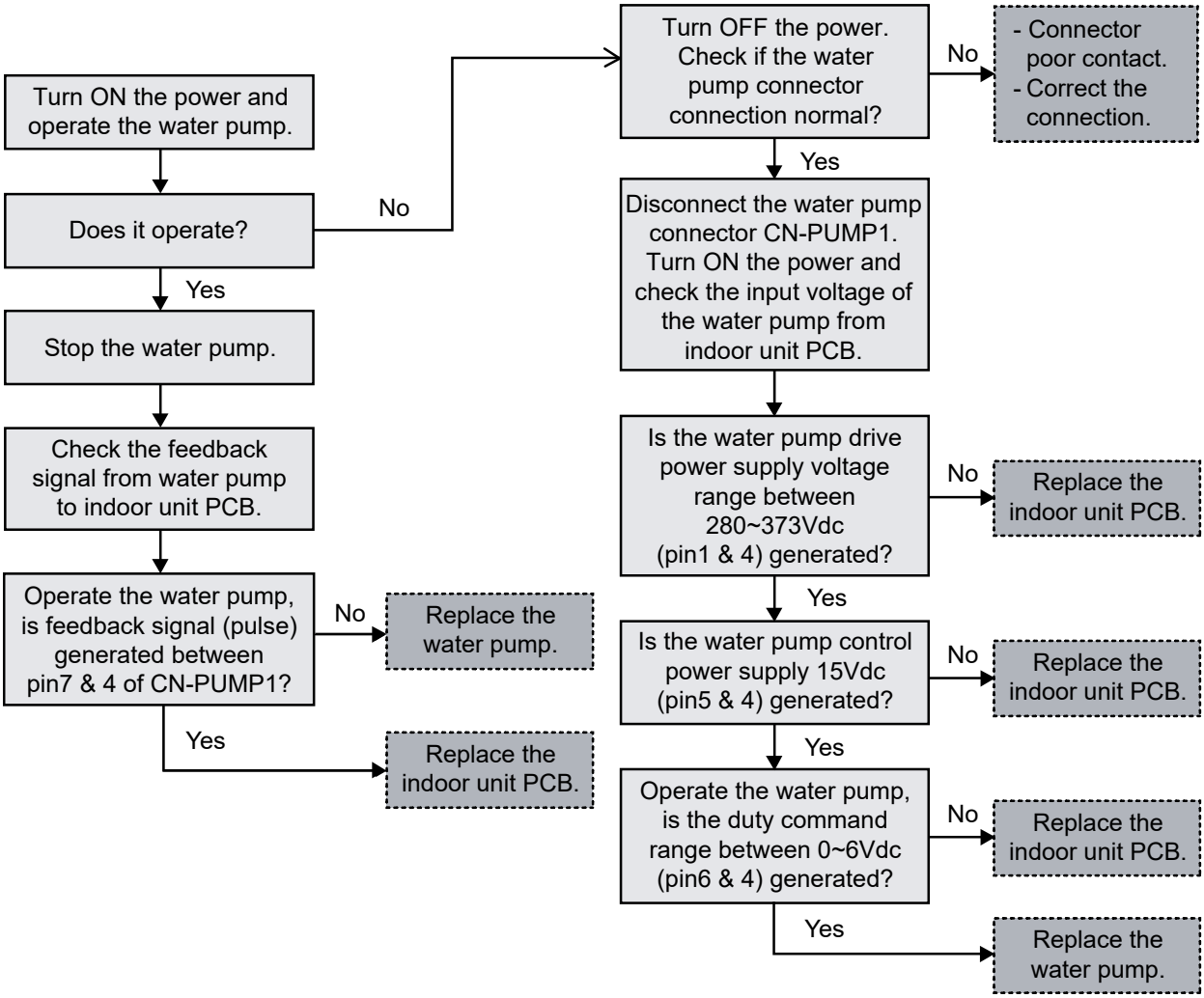

18.5.4 Water Pressure Sensor (H21)

Malfunction Decision Conditions:

During operation of cooling and heating, when the outdoor high pressure sensor output signal is 0 Vdc or 5 Vdc.

Malfunction Caused:

1 Faulty connector connection.
2 Faulty sensor.
3 Faulty outdoor unit PCB (main).

Abnormality Judgment:

Continue 4 times in 20 minutes.

Troubleshooting:

Caution

For safety reason and to prevent component breakdown, always switch off the power before remove and connect the component.

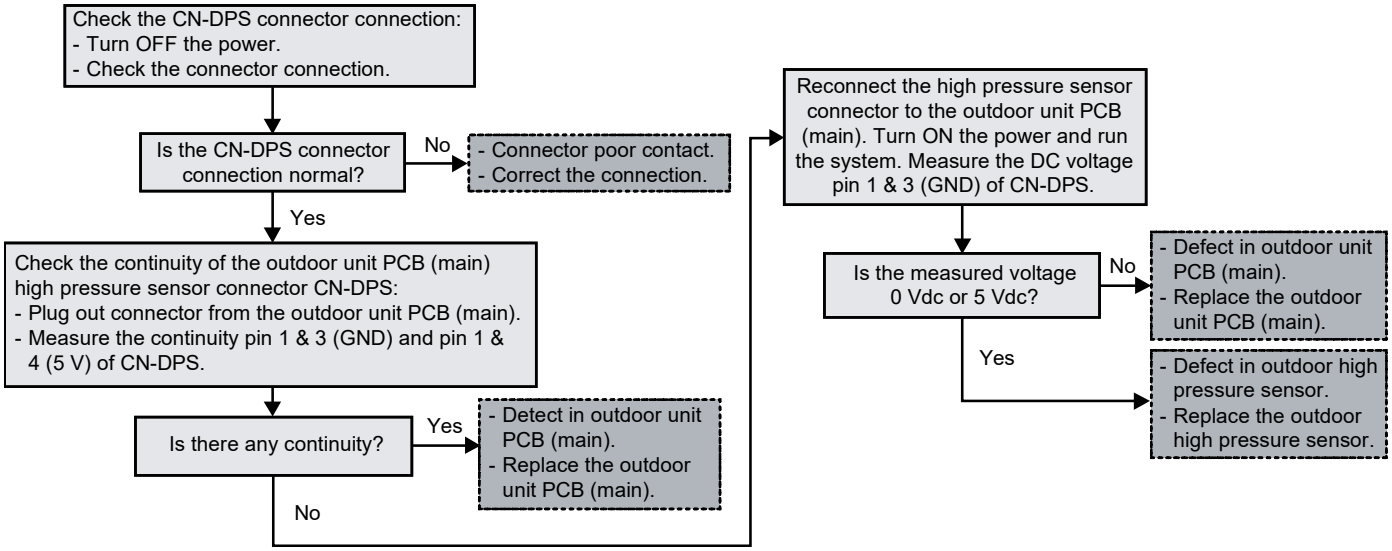

18.5.5 Indoor Refrigerant Liquid Temperature Sensor Abnormality (H23)

Malfunction Decision Conditions:

During startup and operation of cooling and heating, the temperatures detected by the indoor refrigerant liquid temperature sensor are used to determine sensor error.

Malfunction Caused:

1 Faulty connector connection.
2 Faulty sensor.
3 Faulty indoor unit PCB (main).

Abnormality Judgment:

Continue for 5 seconds.

Troubleshooting:

Caution For safety reason and to prevent component breakdown, always switch off the power before remove and connect the component.

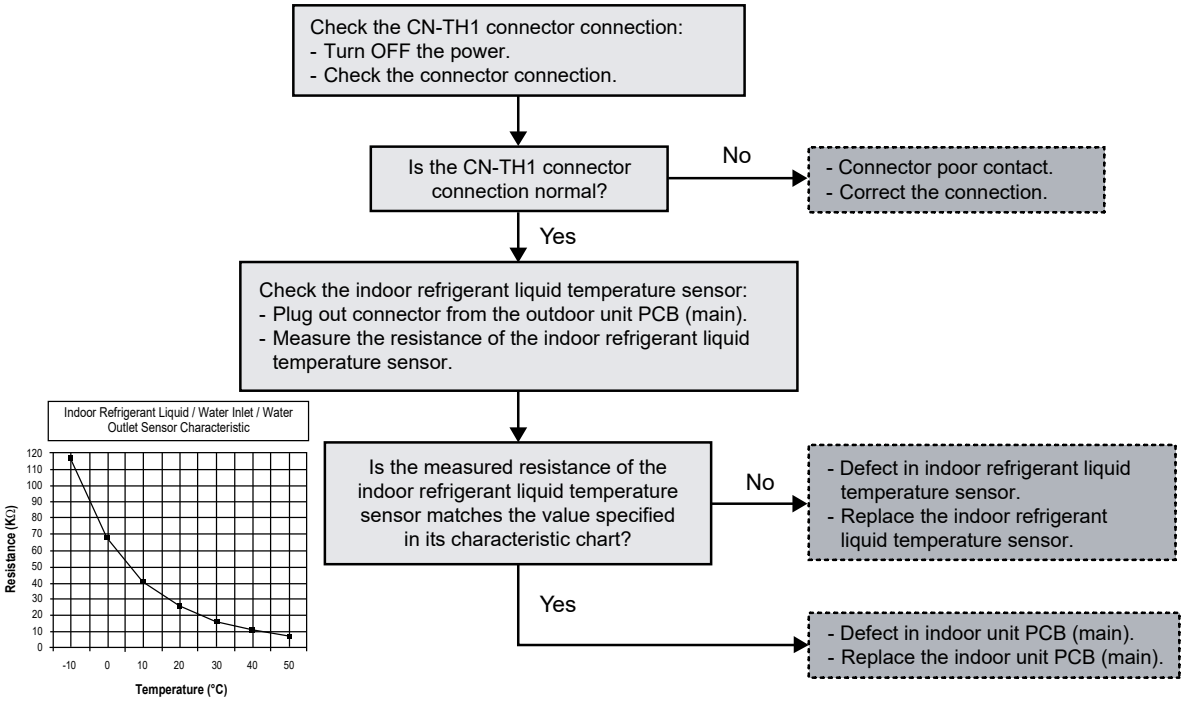

18.5.6 Service Valve Error (H27)

Malfunction Decision Conditions:

During cooling operation, when:-

[a] Indoor refrigerant pipe temperature at compressor startup - present indoor refrigerant pipe temperature < 2°C

[b] Present high pressure - high pressure at compressor startup < 5kg/cm^2

**Judgment only for first time cooling operation and not during pump down operation.

Malfunction Caused:

1. 3 way valves closed.
2. Faulty high pressure sensor.
3. Faulty indoor refrigerant pipe temperature sensor
4. Faulty outdoor unit PCB (main).

Abnormality Judgment:

Continue for 5 minutes.

Troubleshooting: Caution

For safety reason and to prevent component breakdown, always switch off the power before remove and connect the component.

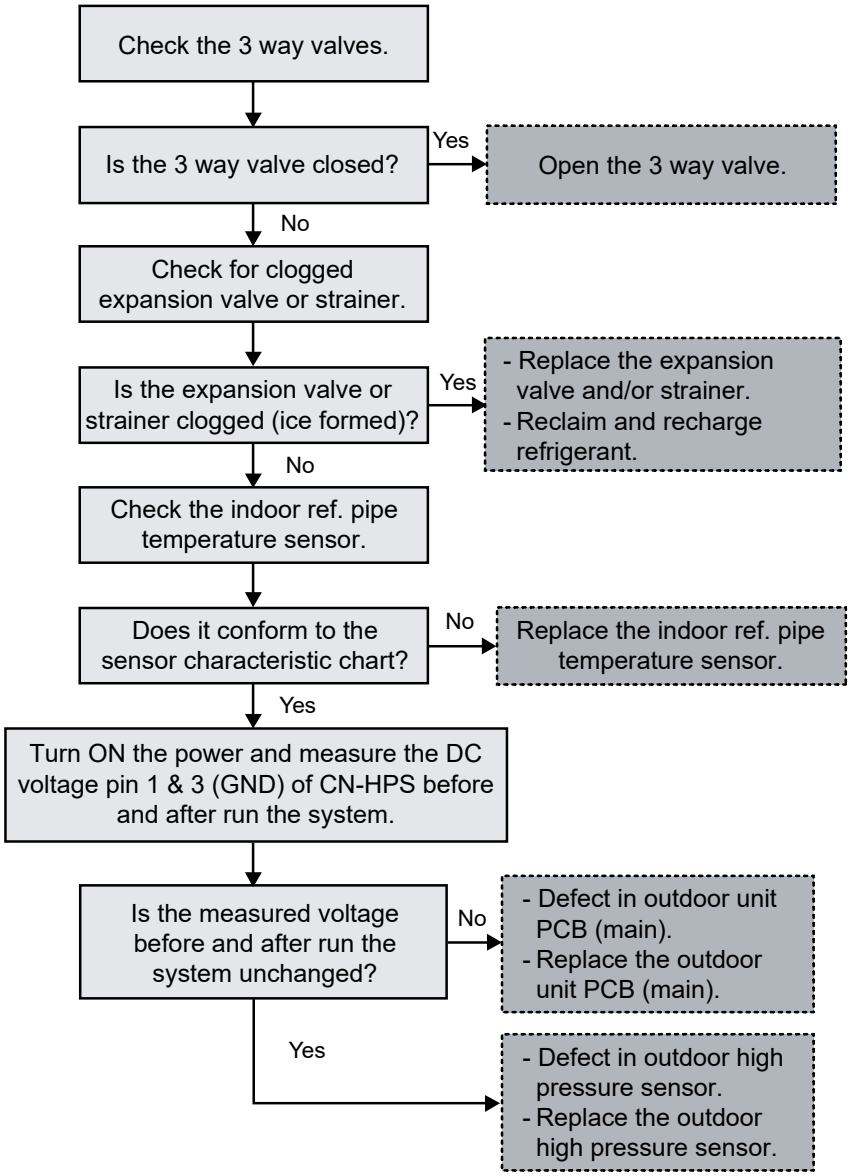

18.5.7 Abnormal Solar Sensor (H28)

Malfunction Caused:

1 Faulty connector connection.
2 Faulty solar sensor.
3 Faulty indoor sub PCB.

Abnormality Judgment:

Continue for 5 seconds.

18.5.8 Abnormal Swimming Pool Sensor (H31)

Malfunction Caused:

1 Faulty connector connection.
2 Faulty swimming pool sensor.
3 Faulty indoor sub PCB.

Abnormality Judgment:

Continue for 5 seconds.

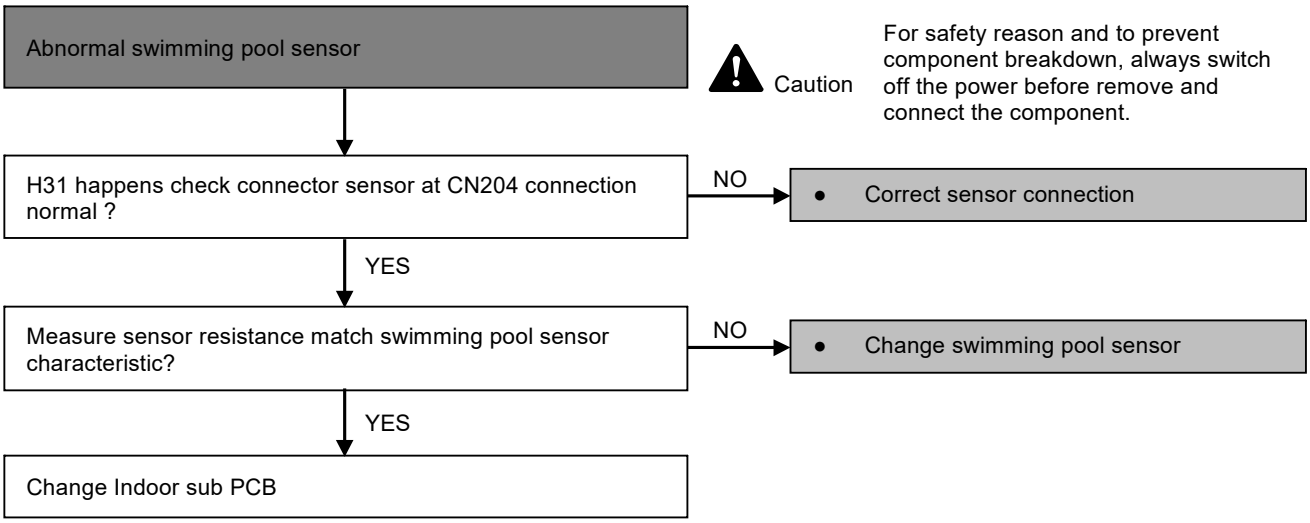

18.5.9 Abnormal Buffer Tank Sensor (H36)

Malfunction Caused:

1 Faulty connector connection.
2 Faulty buffer tank sensor.
3 Faulty indoor sub PCB.

Abnormality Judgment:

Continue for 5 seconds.

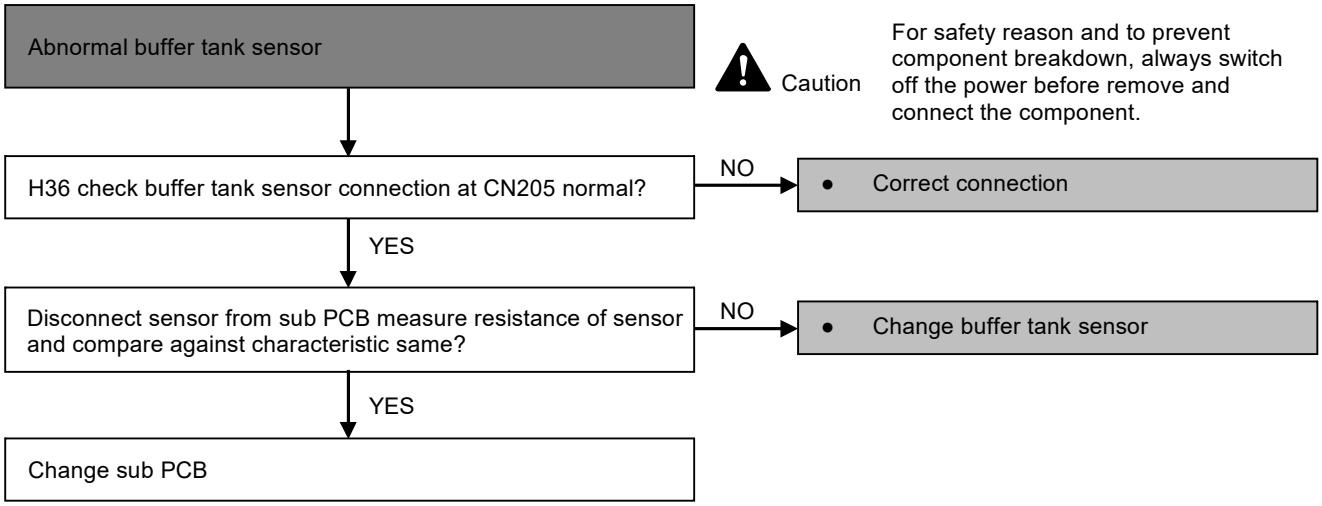

18.5.10 Brand Code Not Matching (H38)

Malfunction Caused:

1 Indoor and outdoor brand code not match.

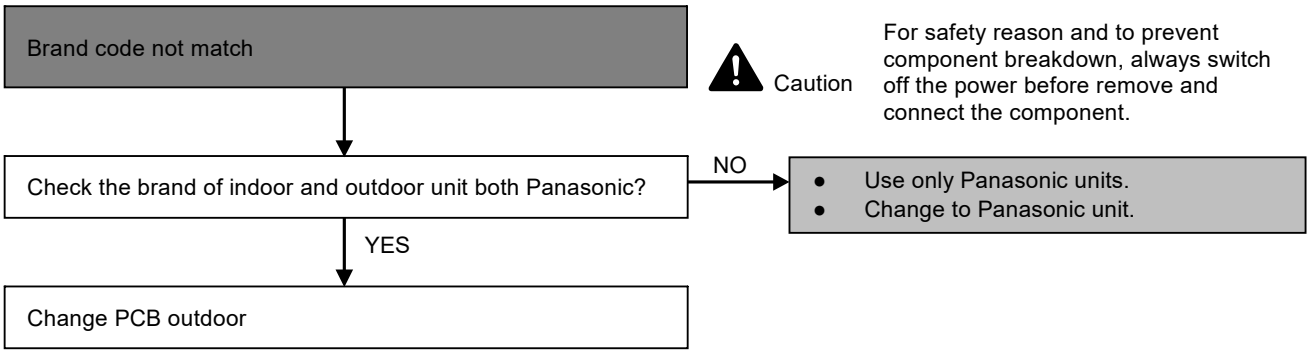

18.5.11 Compressor Low Pressure Protection (H42)

Malfunction Decision Conditions:

During operation of heating and after 5 minutes compressor ON, when outdoor pipe temperature below -29°C or above 26°C is detected by the outdoor pipe temperature sensor.

Malfunction Caused:

1 Dust accumulation on the outdoor unit heat exchanger.
2 Air short circuit at outdoor unit.
3 2 way valve partially closed.
4 Faulty outdoor unit fan motor.
5 Refrigerant shortage (refrigerant leakage).
6 Clogged expansion valve or strainer.
7 Faulty outdoor pipe temperature sensor.
8 Faulty outdoor unit main PCB (main).

Troubleshooting: Caution

For safety reason and to prevent component breakdown, always switch off the power before remove and connect the component.

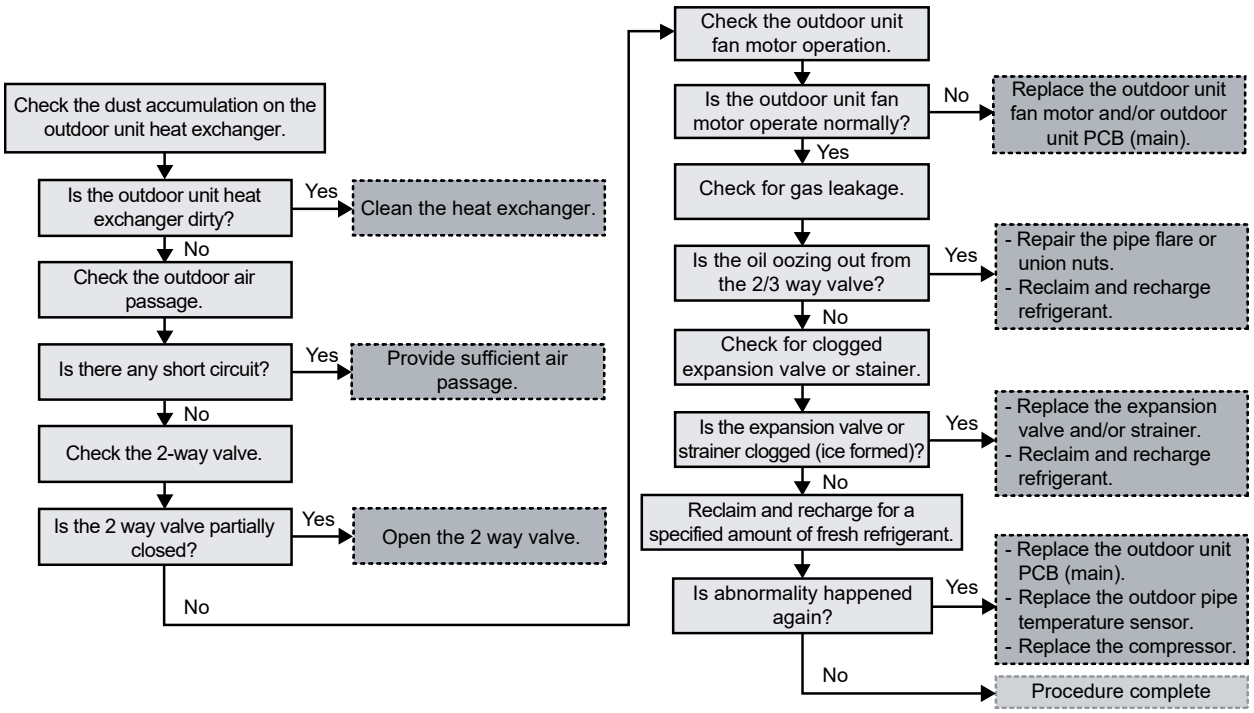

18.5.12 Abnormal Zone 1 Sensor (H43)

Malfunction Caused:

1 Faulty connector connection.
2 Faulty buffer tank sensor.
3 Faulty indoor sub PCB.

Abnormality Judgment:

Continue for 5 seconds.

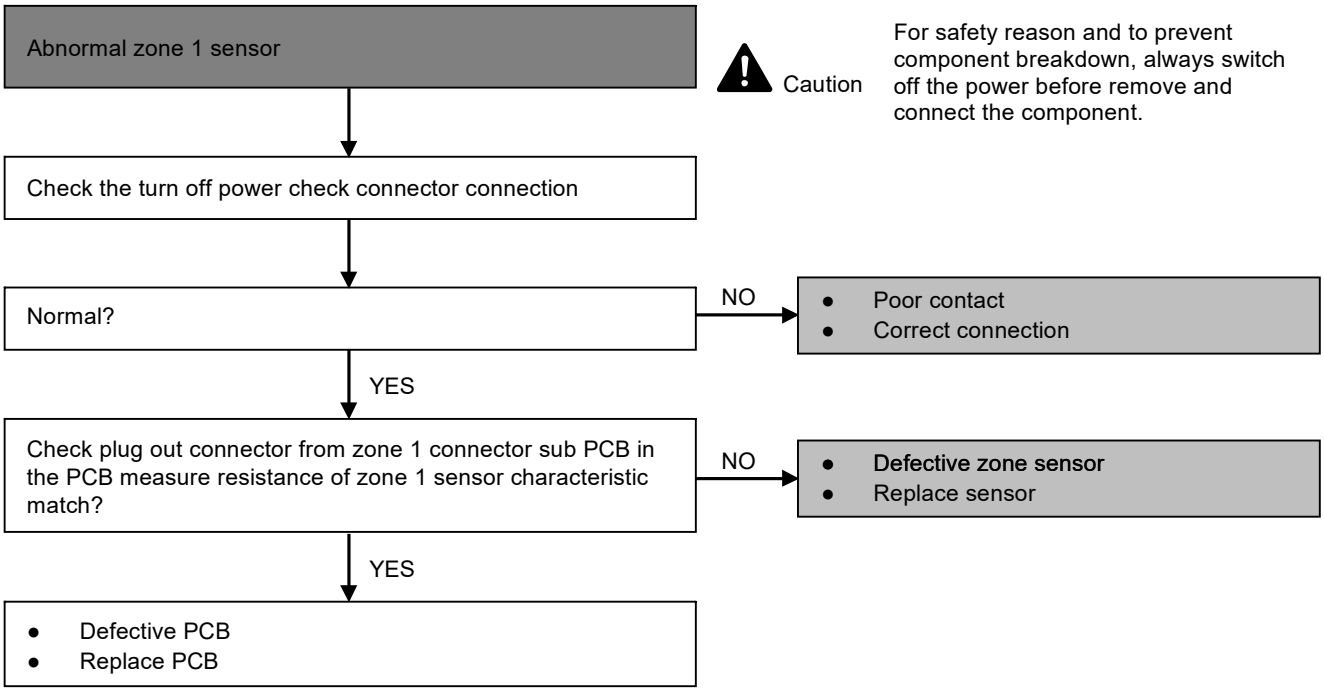

18.5.13 Abnormal Zone 2 Sensor (H44)

Malfunction Caused:

1 Faulty connector connection.
2 Faulty buffer tank sensor.
3 Faulty indoor sub PCB.

Abnormality Judgment:

Continue for 5 seconds.

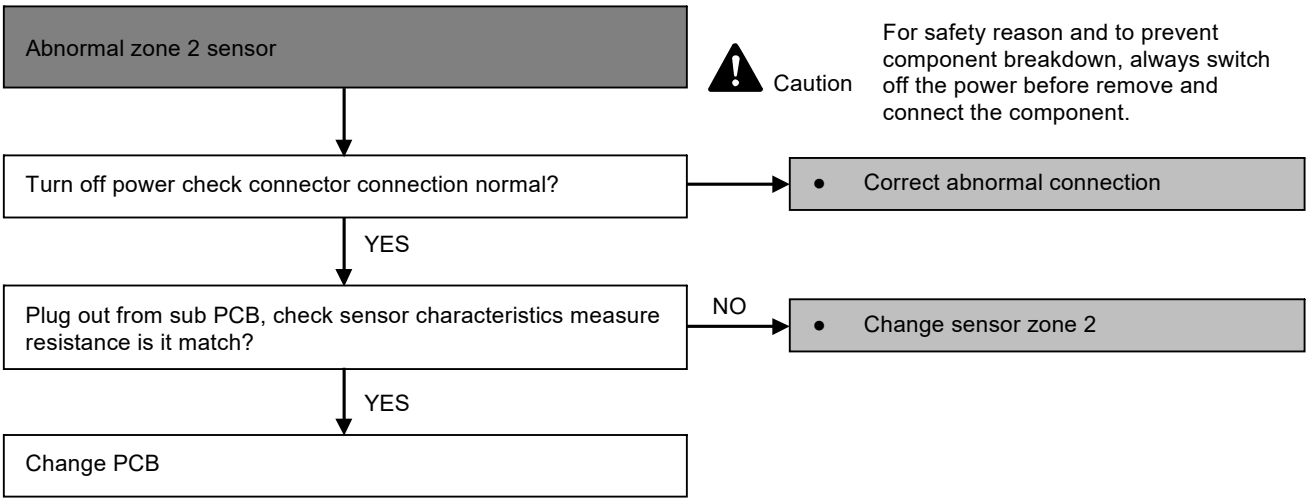

18.5.14 Water Flow Switch Abnormality (H62)

Malfunction Decision Conditions:

During operation of cooling and heating, the water flow detected by the indoor water flow switch is used to determine water flow error.

Malfunction Caused:

1 Faulty water pump.
2 Water leak in system.
3 Faulty connector connection.
4 Faulty water flow switch.
5 Faulty indoor unit PCB (main).

Abnormality Judgment:

Continue for 10 seconds (but no judgment for 9 minutes after compressor startup/restart).

Troubleshooting: **Caution** For safety reason and to prevent component breakdown, always switch off the power before remove and connect the component.

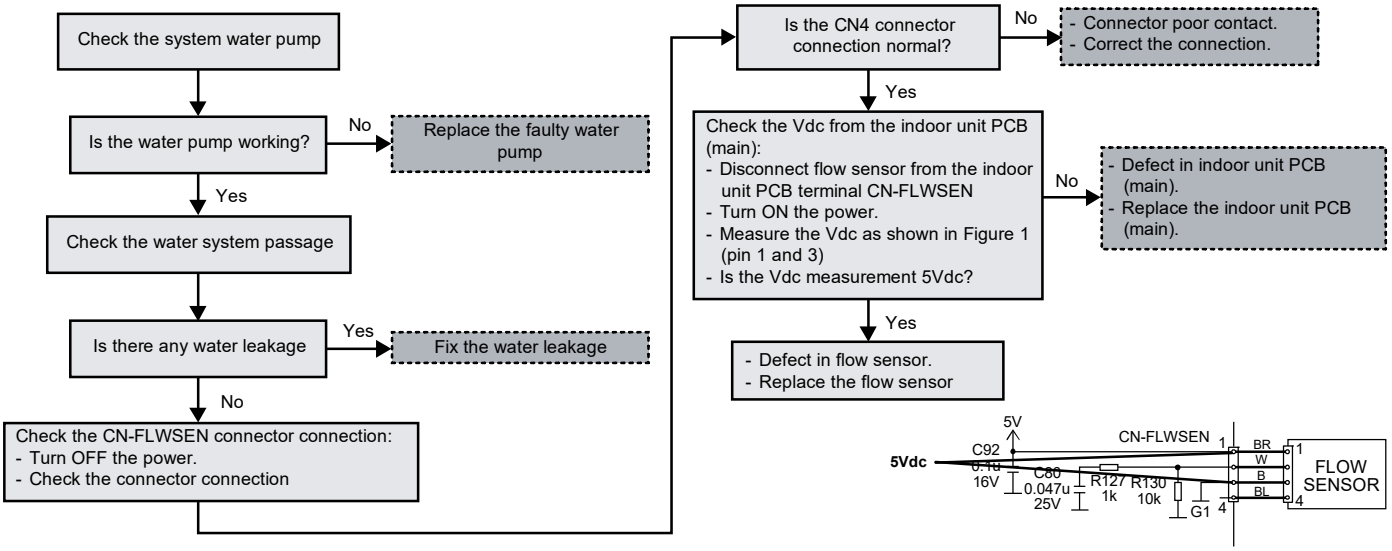

Figure 1

18.5.15 Outdoor Low Pressure Abnormality (H63)

Malfunction Decision Conditions:

During operation of cooling and heating, when the outdoor low pressure sensor output signal is 0 Vdc or 5 Vdc.

Malfunction Caused:

1 Faulty connector connection.
2 Faulty sensor.
3 Faulty outdoor unit PCB (main).

Abnormality Judgment:

Continue 4 times in 20 minutes.

Troubleshooting: Caution

For safety reason and to prevent component breakdown, always switch off the power before remove and connect the component.

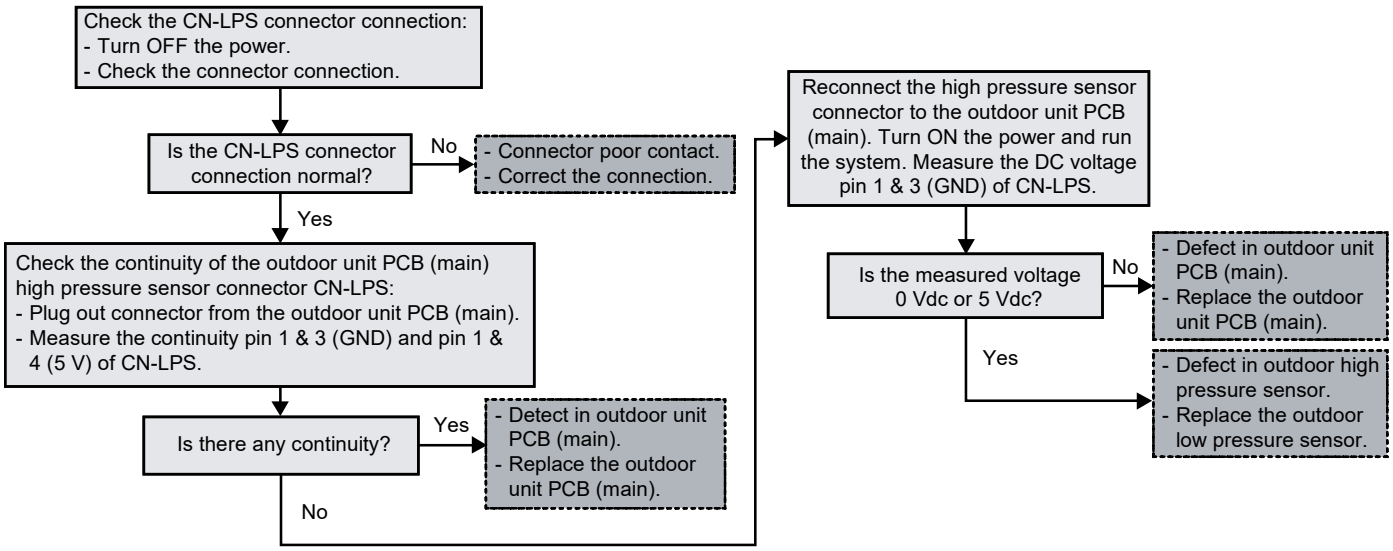

18.5.16 Outdoor High Pressure Abnormality (H64)

Malfunction Decision Conditions:

During operation of cooling and heating, when the outdoor high pressure sensor output signal is 0 Vdc or 5 Vdc.

Malfunction Caused:

1 Faulty connector connection.
2 Faulty sensor.
3 Faulty outdoor unit PCB (main).

Abnormality Judgment:

Continue 4 times in 20 minutes.

Troubleshooting: Caution

For safety reason and to prevent component breakdown, always switch off the power before remove and connect the component.

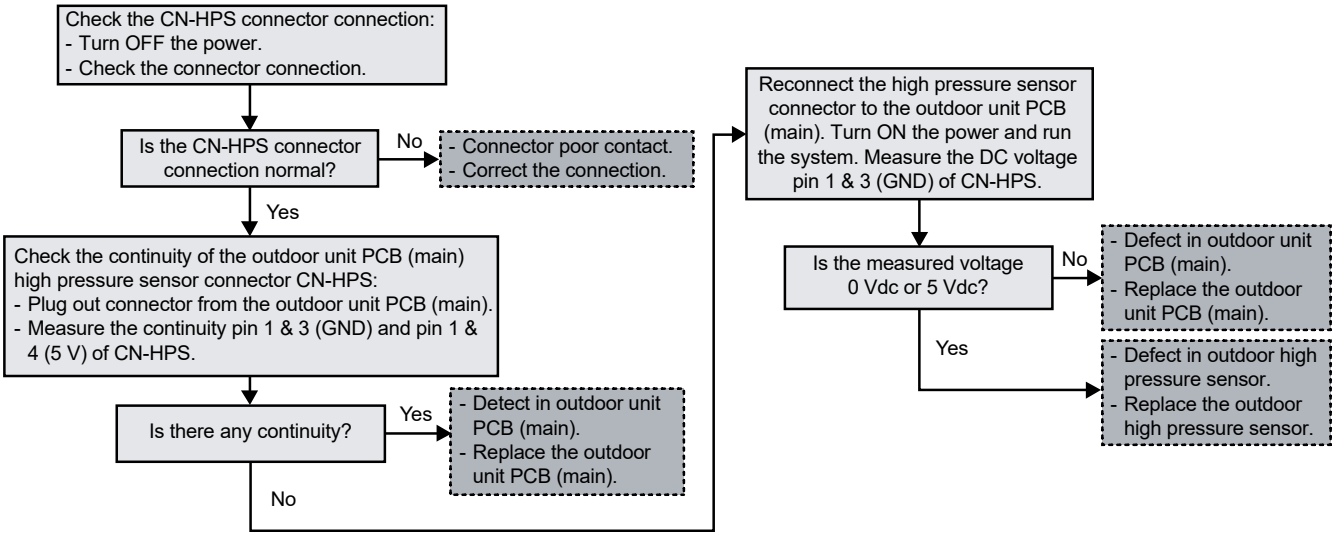

18.5.17 Deice Circulation Error (H65)

Malfunction Decision Conditions:

During startup and operation of deice (mode 2), the water flow (> 10l/min) detected by the water flow switch is used to determine deice circulation error.

Malfunction Caused:

1 Water flow in air-to-water heatpump indoor unit circuitry.
2 Faulty indoor unit water flow switch.
3 Faulty indoor unit water pump.
4 Faulty indoor unit PCB.

Abnormality Judgment:

Continue for 10 seconds.

Troubleshooting:

Caution For safety reason and to prevent component breakdown, always switch off the power before remove and connect the component.

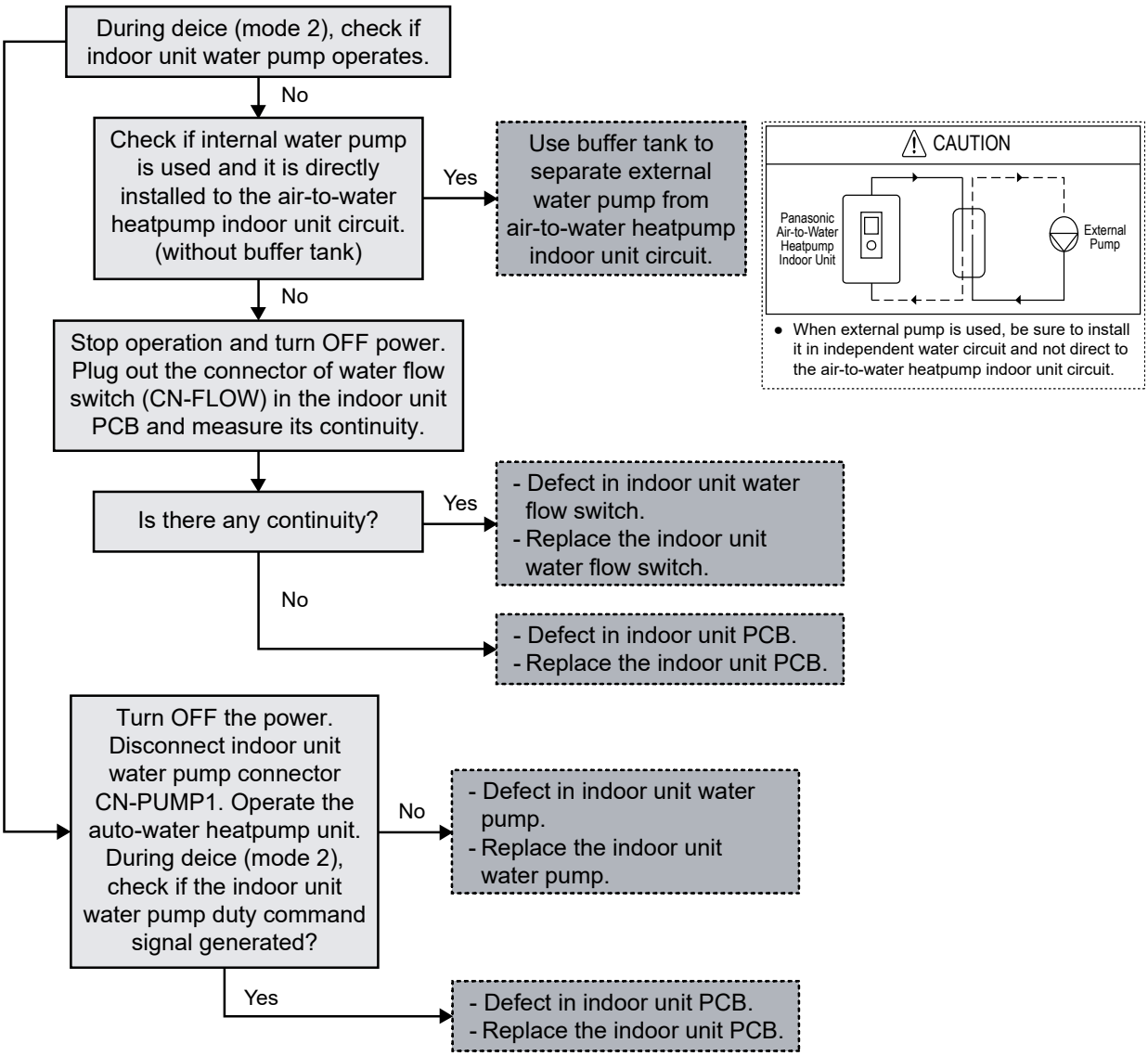

18.5.18 Abnormal External Thermistor 1 (H67)

Malfunction Caused:

1 Faulty connector connection.
2 Faulty room temperature zone 1 sensor.
3 Faulty indoor sub PCB.

Abnormality Judgment:

Continue for 5 seconds.

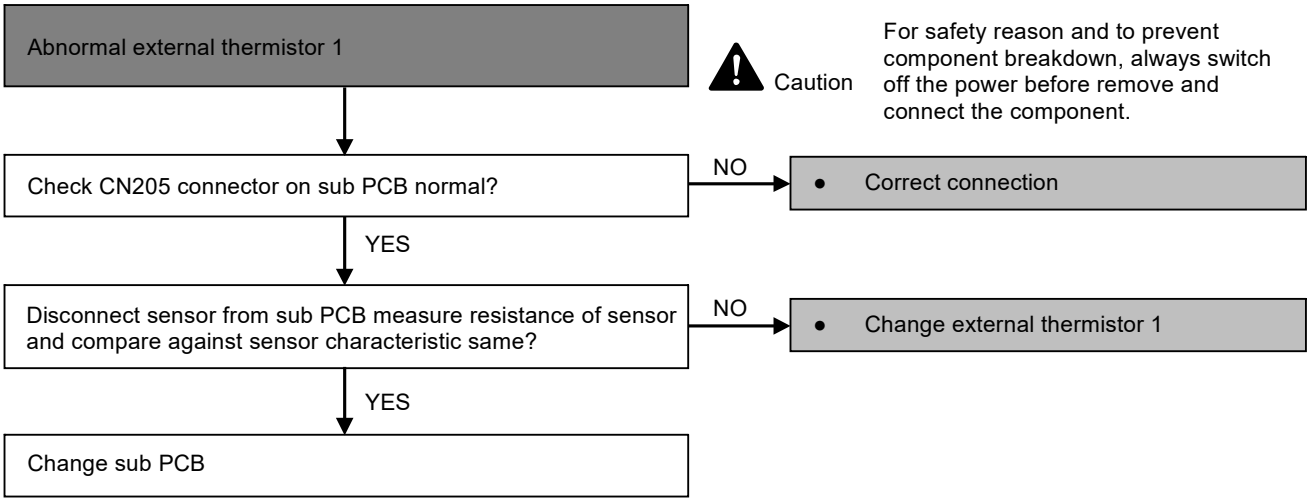

18.5.19 Abnormal External Thermistor 2 (H68)

Malfunction Caused:

1 Faulty connector connection.
2 Faulty room temperature zone 2 sensor.
3 Faulty indoor sub PCB.

Abnormality Judgment:

Continue for 5 seconds.

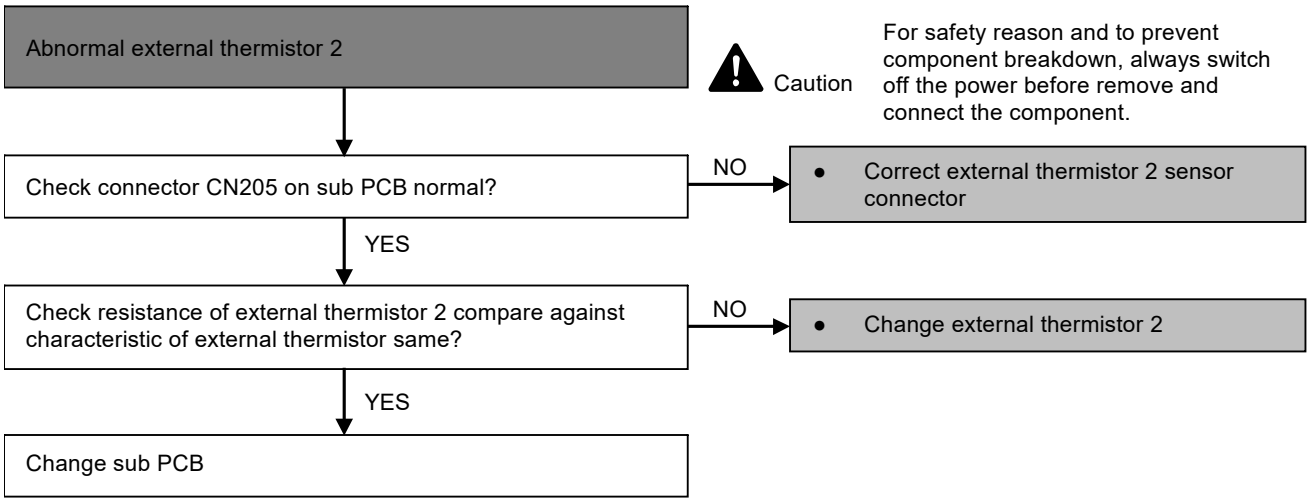

18.5.20 Indoor Backup Heater OLP Abnormality (H70)

Malfunction Decision Conditions:

During operation of indoor backup heater, when no power supplies to indoor backup heater or OLP open circuit.

Malfunction Caused:

1 Faulty power supply connector connection.
2 Faulty connector connection.
3 Faulty indoor backup heater overload protector (OLP).
4 Faulty indoor unit PCB (main).

Abnormality Judgment:

Continue for 60 seconds.

Troubleshooting: Caution

For safety reason and to prevent component breakdown, always switch off the power before remove and connect the component.

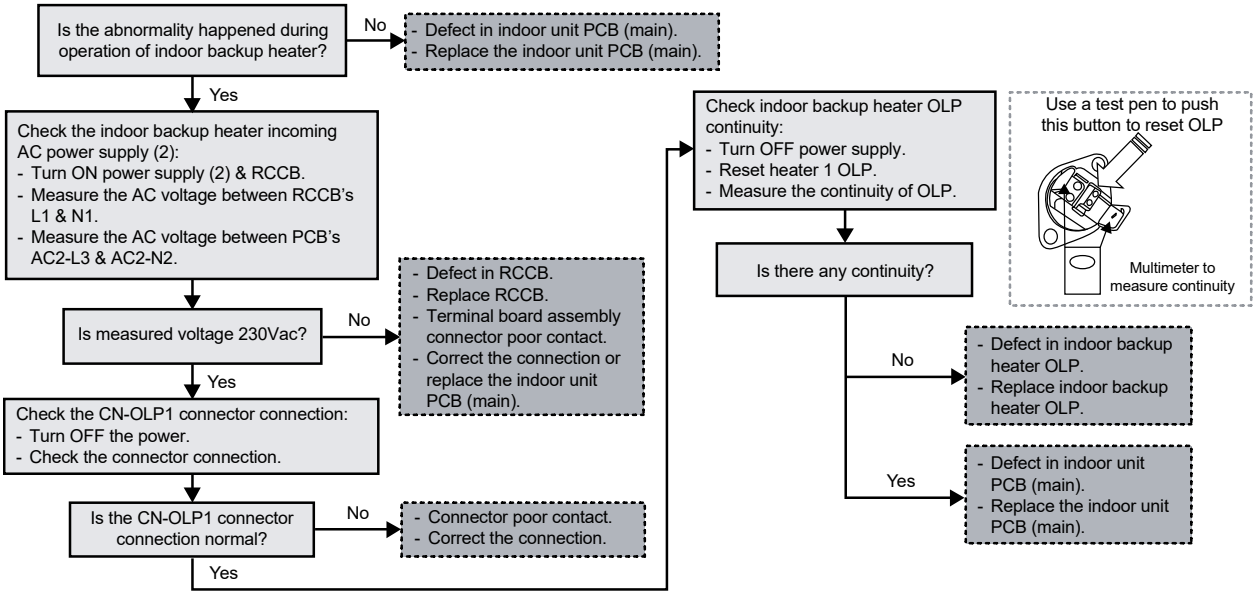

18.5.21 Tank Temperature Sensor Abnormality (H72)

Malfunction Decision Conditions:

When tank connection is set to ON, the temperatures detected by the tank temperature sensor are used to determine sensor error.

Malfunction Caused:

1 Faulty connector connection.
2 Faulty sensor.
3 Faulty indoor unit PCB (main).

Abnormality Judgment:

Continue for 5 seconds.

Troubleshooting:

Caution For safety reason and to prevent component breakdown, always switch off the power before remove and connect the component.

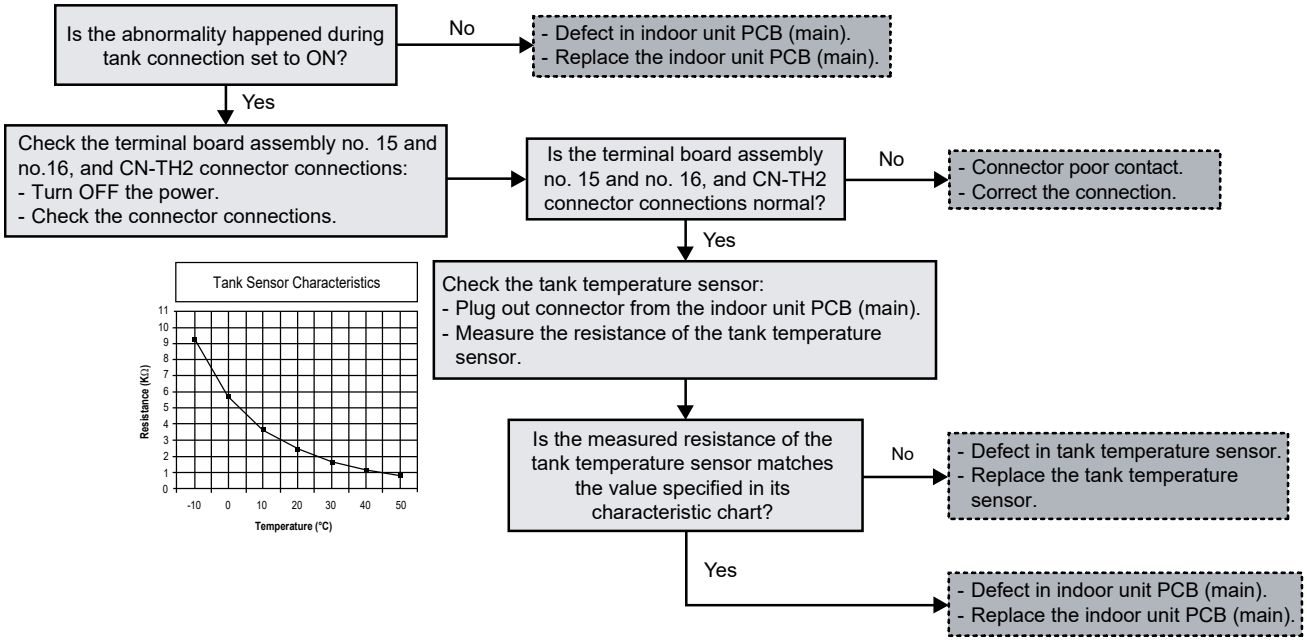

18.5.22 PCB Communication Error (H74)

Malfunction Decision Conditions:

When External PCB connection is select “YES” and no communication with External PCB micon for 10 seconds and above.

Malfunction Caused:

1 Faulty connector connection.
2 Faulty indoor PCB.
3 Faulty indoor sub PCB.

Abnormality Judgment:

After 1 minute operation started.

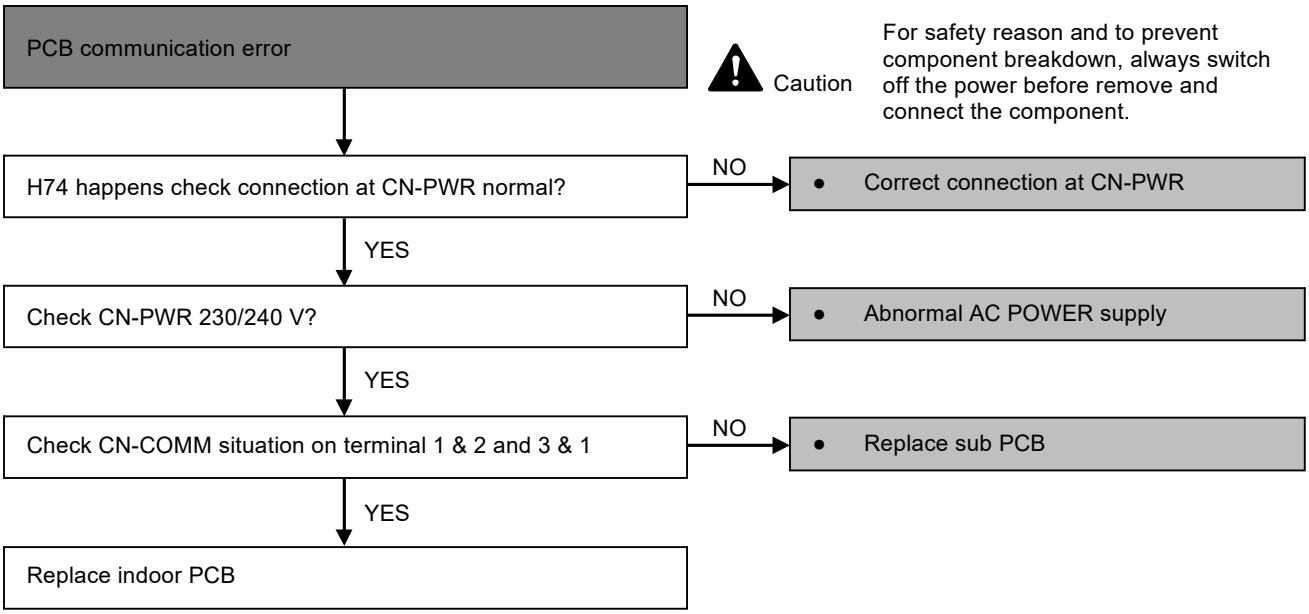

18.5.23 Indoor-Control Panel Communication Abnormality (H76)

Malfunction Decision Conditions:

During standby and operation of cooling and heating, indoor-control panel error occur.

Malfunction Caused:

1 Faulty connector connection.
2 Faulty control panel.
3 Faulty indoor unit PCB (main).

Troubleshooting: **Caution** For safety reason and to prevent component breakdown, always switch off the power before remove and connect the component.

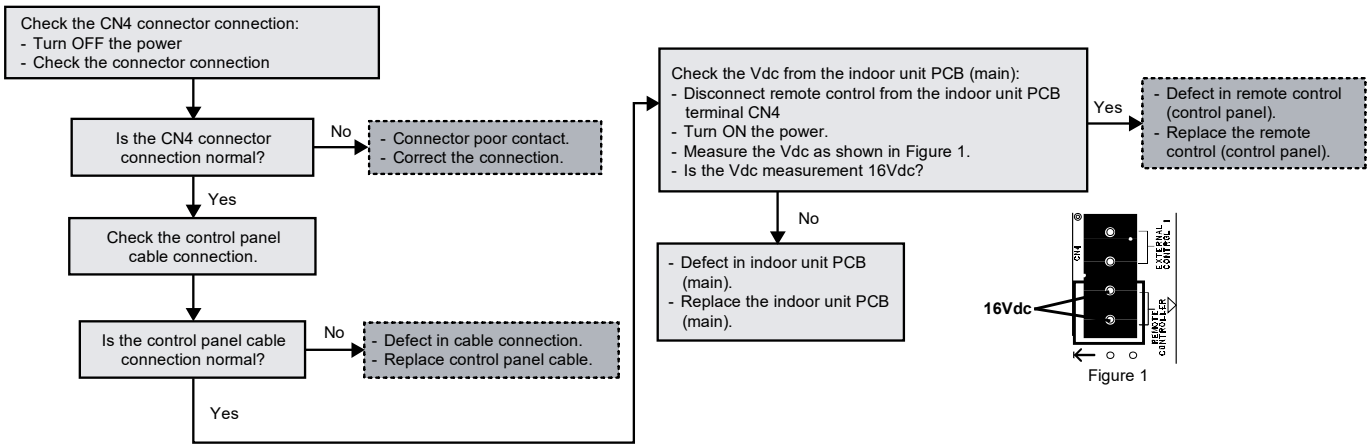

Figure 1

18.5.24 Indoor/Outdoor Abnormal Communication (H90)

Malfunction Decision Conditions:

During operation of cooling and heating, the data received from outdoor unit in indoor unit signal transmission is checked whether it is normal.

Malfunction Caused:

1 Faulty outdoor unit PCB (main).
2 Faulty indoor unit PCB (main).
3 Indoor-outdoor signal transmission error due to wrong wiring.
4 Indoor-outdoor signal transmission error due to breaking of wire in the connection wires between the indoor and outdoor units.
5 Indoor-outdoor signal transmission error due to disturbed power supply waveform.

Abnormality Judgment:

Continue for 1 minute after operation.

Troubleshooting: Caution

For safety reason and to prevent component breakdown, always switch off the power before remove and connect the component.

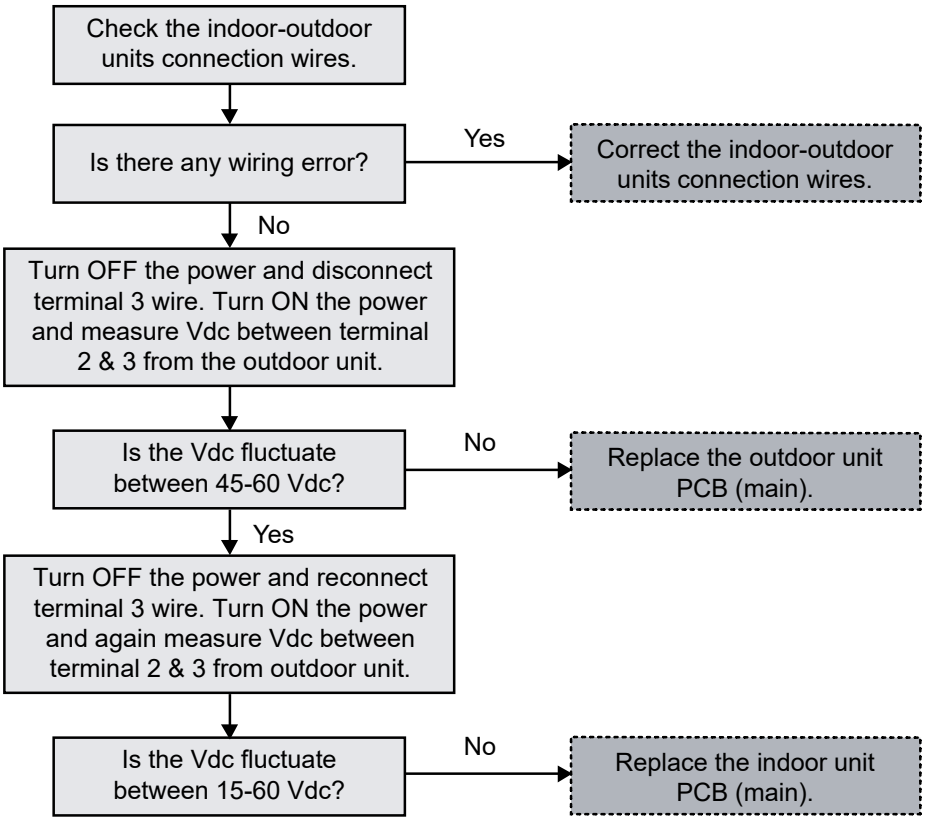

18.5.25 Tank Booster Heater OLP Abnormality (H91)

Malfunction Decision Conditions:

During operation of tank booster heater, and tank booster heater OLP open circuit.

Malfunction Caused:

1 Faulty connector connection.
2 Faulty tank booster heater overload protector (OLP).
3 Faulty indoor unit PCB (main).

Abnormality Judgment:

Continue for 60 seconds.

Troubleshooting: **Caution** For safety reason and to prevent component breakdown, always switch off the power before remove and connect the component.

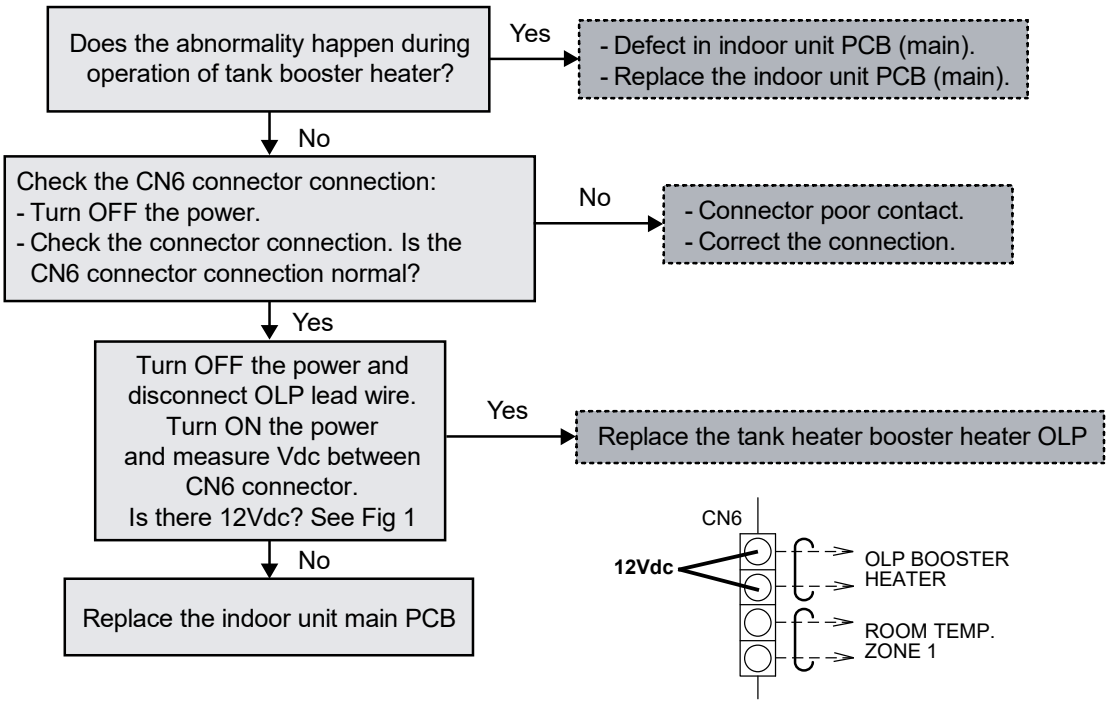

Fig 1

18.5.26 Unspecified Voltage between Indoor and Outdoor (H95)

Malfunction Decision Conditions:

The supply power is detected for its requirement by the indoor/outdoor transmission.

Malfunction Caused:

1 Insufficient power supply.
2 Faulty outdoor unit PCB (noise filter/main).

Troubleshooting: Caution

For safety reason and to prevent component breakdown, always switch off the power before remove and connect the component.

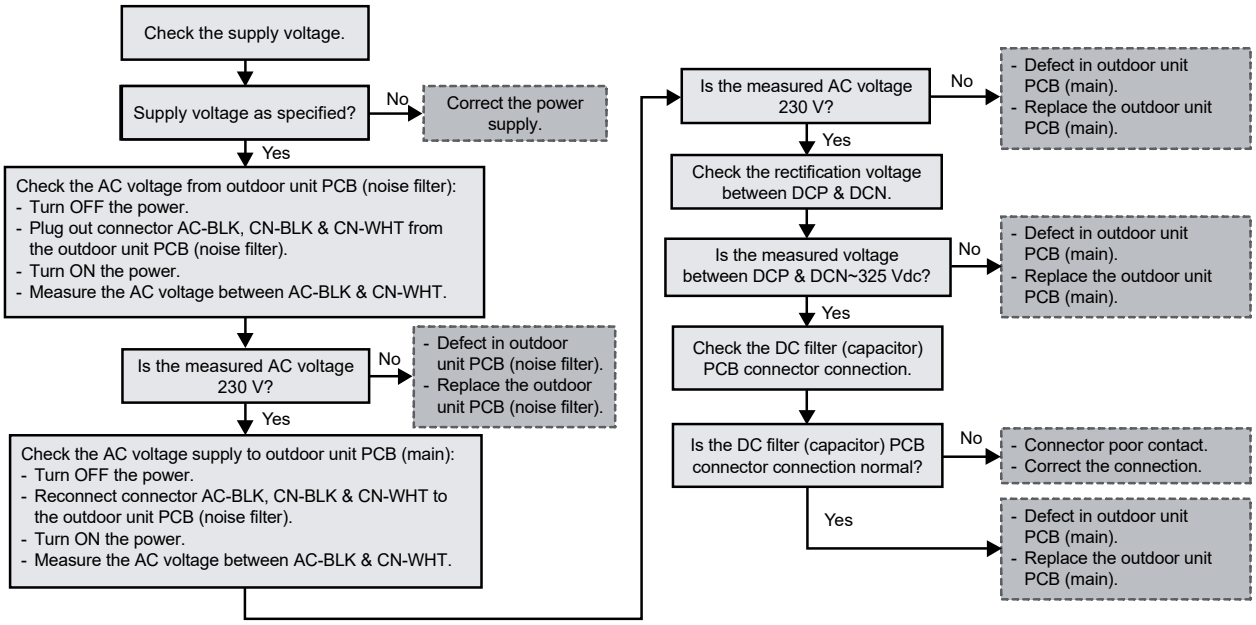

18.5.27 Outdoor High Pressure Protection (H98 / F95)

Malfunction Decision Conditions:

During operation of cooling / heating, when pressure 4.2 MPa and above is detected by outdoor high pressure sensor.

Malfunction Caused:

1 Faulty water pump.
2 Insufficient water flow rate in system.
3 Water leak in system.
4 Dust accumulation in the outdoor unit heat exchanger.
5 Air short circuit at outdoor.
6 Faulty outdoor unit fan motor.
7 2/3 way closed.
8 Clogged expansion valve or strainer.
9 Excessive refrigerant.
10 Faulty outdoor high pressure sensor.
11 Faulty outdoor unit PCB (main).

Troubleshooting: **Caution** For safety reason and to prevent component breakdown, always switch off the power before remove and connect the component.

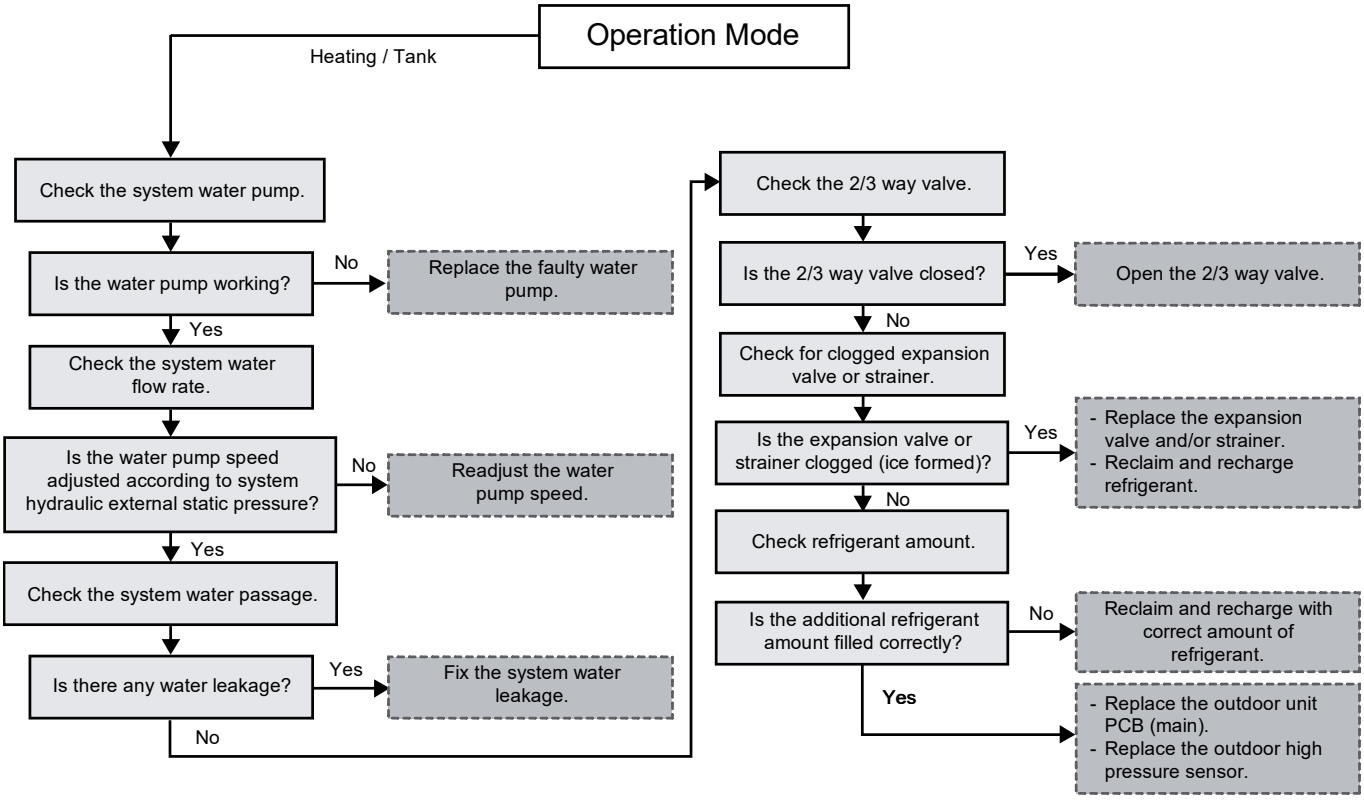

Troubleshooting:

Caution For safety reason and to prevent component breakdown, always switch off the power before remove and connect the component.

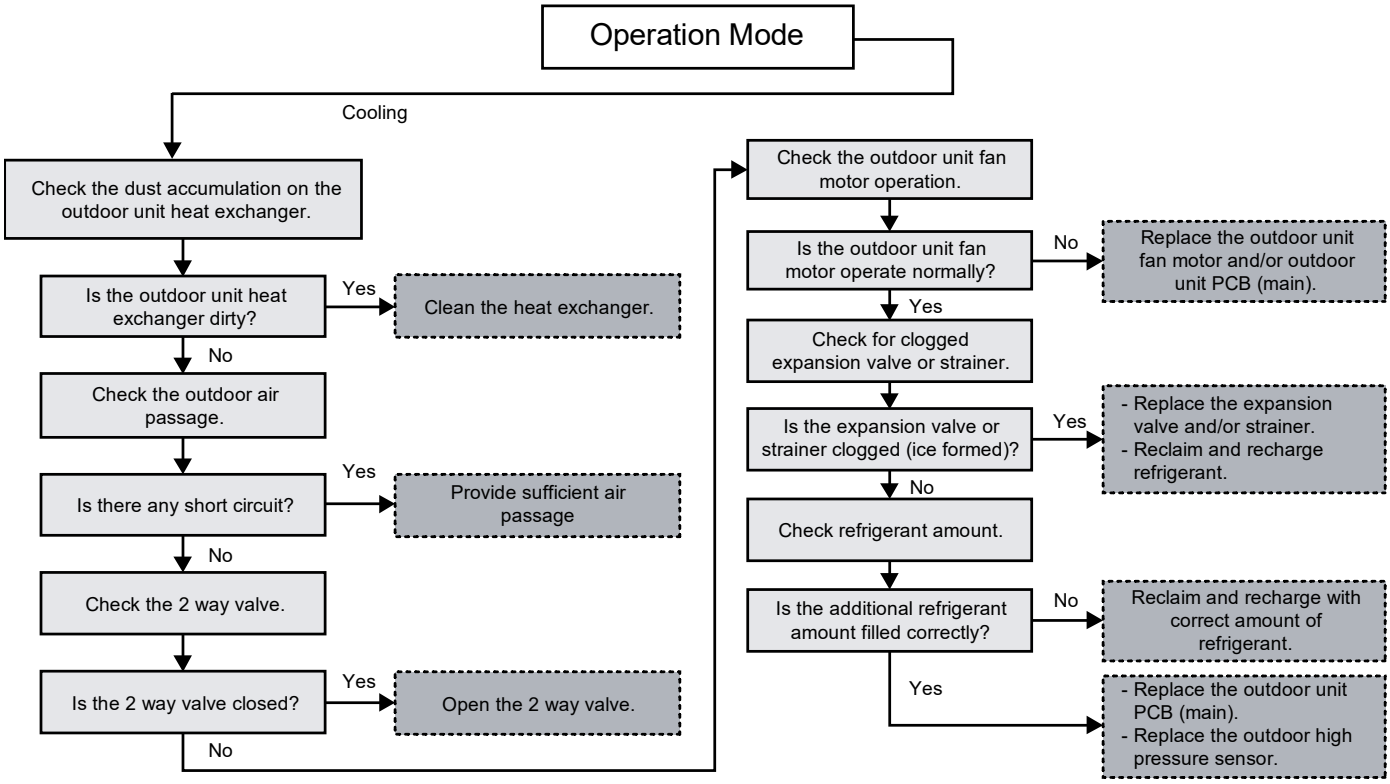

18.5.28 Indoor Freeze-up Protection (H99)

Malfunction Decision Conditions:

During anti-freezing control in cooling operation, when the indoor refrigerant liquid temperature < 0°C.

Malfunction Caused:

1 Faulty water pump.
2 Insufficient water flow rate in system.
3 Water leak in system.
4 2 way valve partially closed.
5 Clogged expansion valve or strainer.
6 Refrigerant shortage (refrigerant leakage).
7 Faulty indoor refrigerant liquid temperature sensor.
8 Faulty indoor unit PCB (main).

Troubleshooting: Caution

For safety reason and to prevent component breakdown, always switch off the power before remove and connect the component.

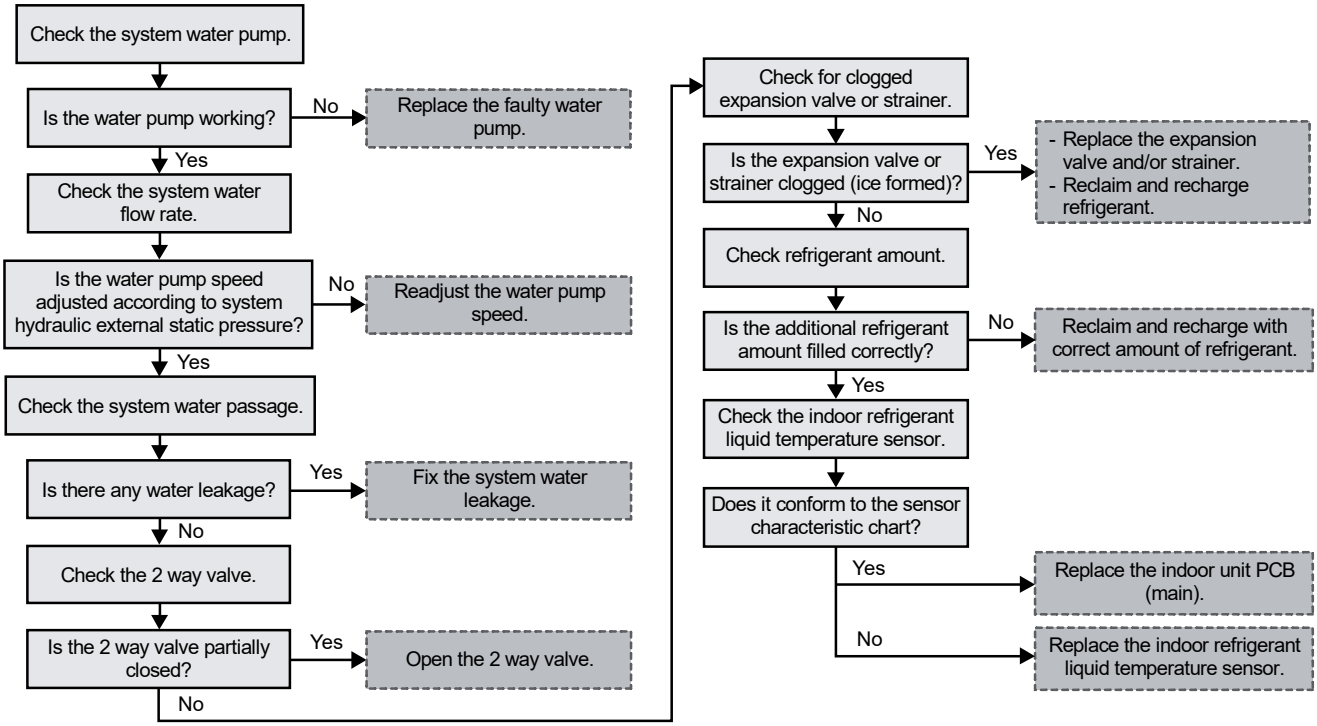

18.5.29 Outdoor High Pressure Switch Activate (F12)

Malfunction Decision Conditions:

During operation of cooling and heating, when pressure 4.5 MPa and above is detected by outdoor high pressure switch.

Malfunction Caused:

1 Dust accumulation on the outdoor unit heat exchanger.
2 Air short circuit at outdoor unit.
3 Faulty water pump.
4 Insufficient water flow rate in system.
5 Water leak in system.
6 2/3 way valve closed.
7 Clogged expansion valve or strainer.
8 Excessive refrigerant.
9 Faulty outdoor high pressure sensor and switch.
10 Faulty outdoor unit PCB.

Abnormality Judgment:

Continue 4 times in 20 minutes.

Troubleshooting: Caution

For safety reason and to prevent component breakdown, always switch off the power before remove and connect the component.

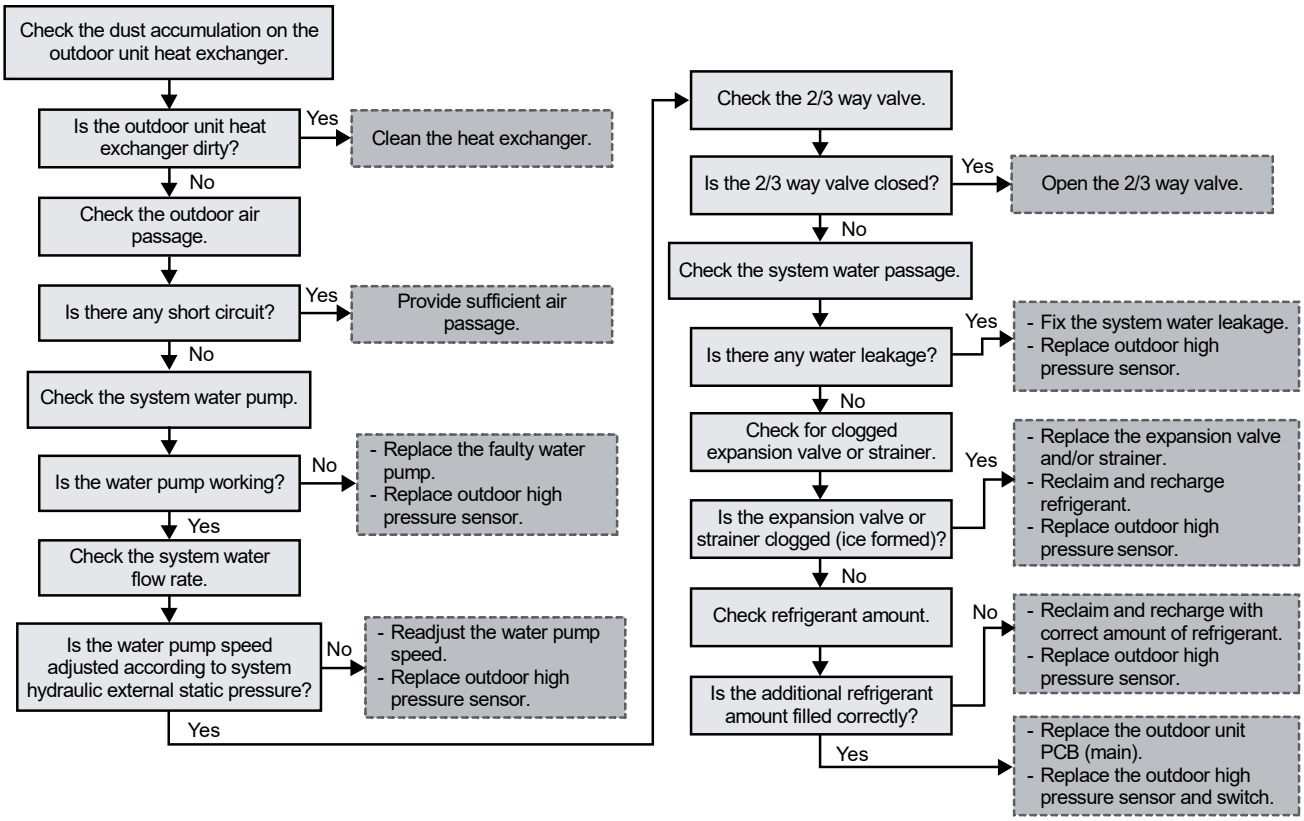

18.5.30 Compressor Rotation Failure (F14)

Malfunction Decision Conditions:

A compressor rotation failure is detected by checking the compressor running condition through the position detection circuit.

Malfunction Caused:

1 Compressor terminal disconnect.
2 Faulty outdoor unit PCB (main).
3 Faulty compressor.

Abnormality Judgment:

Continue 4 times in 20 minutes.

Troubleshooting: Caution

For safety reason and to prevent component breakdown, always switch off the power before remove and connect the component.

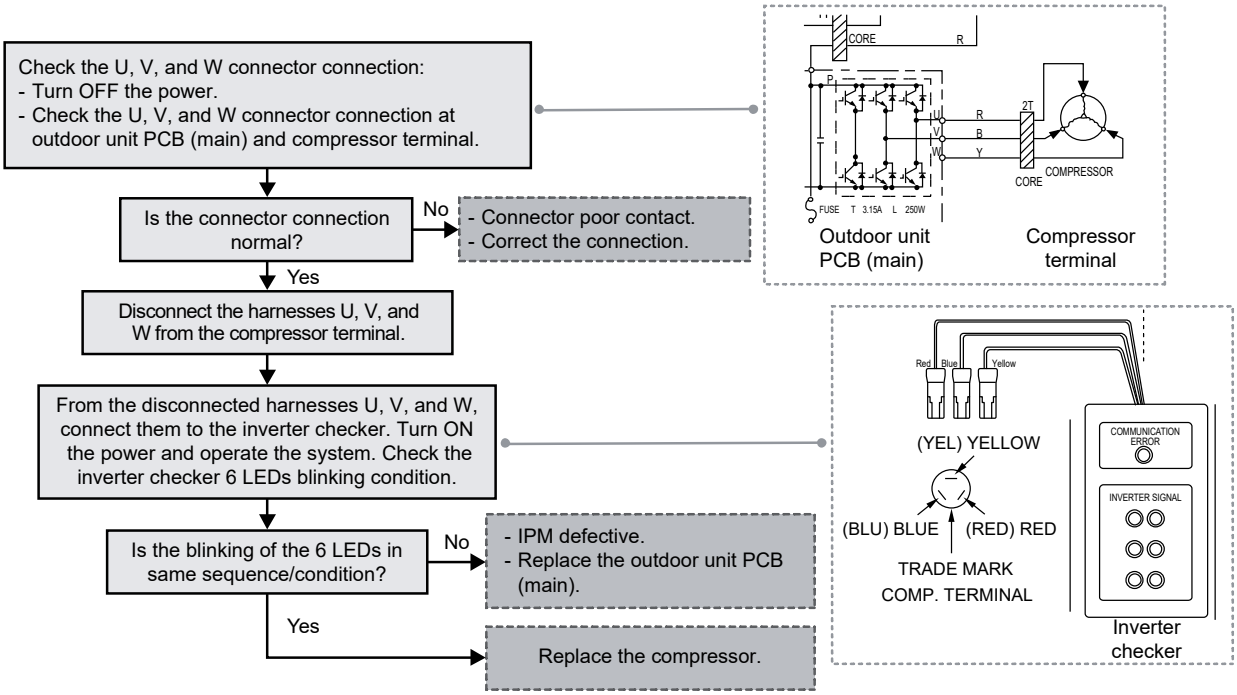

18.5.31 Outdoor Fan Motor (DC Motor) Mechanism Locked (F15)

Malfunction Decision Conditions:

The rotation speed detected by the Hall IC of the fan motor during fan motor operation is used to determine abnormal fan motor (feedback of rotation > 2550 rpm or < 50 rpm).

Malfunction Caused:

1 Operation stop due to short circuit inside the fan motor winding.
2 Operation stop due to breaking of wire inside the fan motor.
3 Operation stop due to breaking of fan motor lead wires.
4 Operation stop due to fan motor Hall IC malfunction.
5 Operation error due to faulty outdoor unit PCB.

Abnormality Judgment:

Continue 2 times in 30 minutes.

Troubleshooting: Caution

For safety reason and to prevent component breakdown, always switch off the power before remove and connect the component.

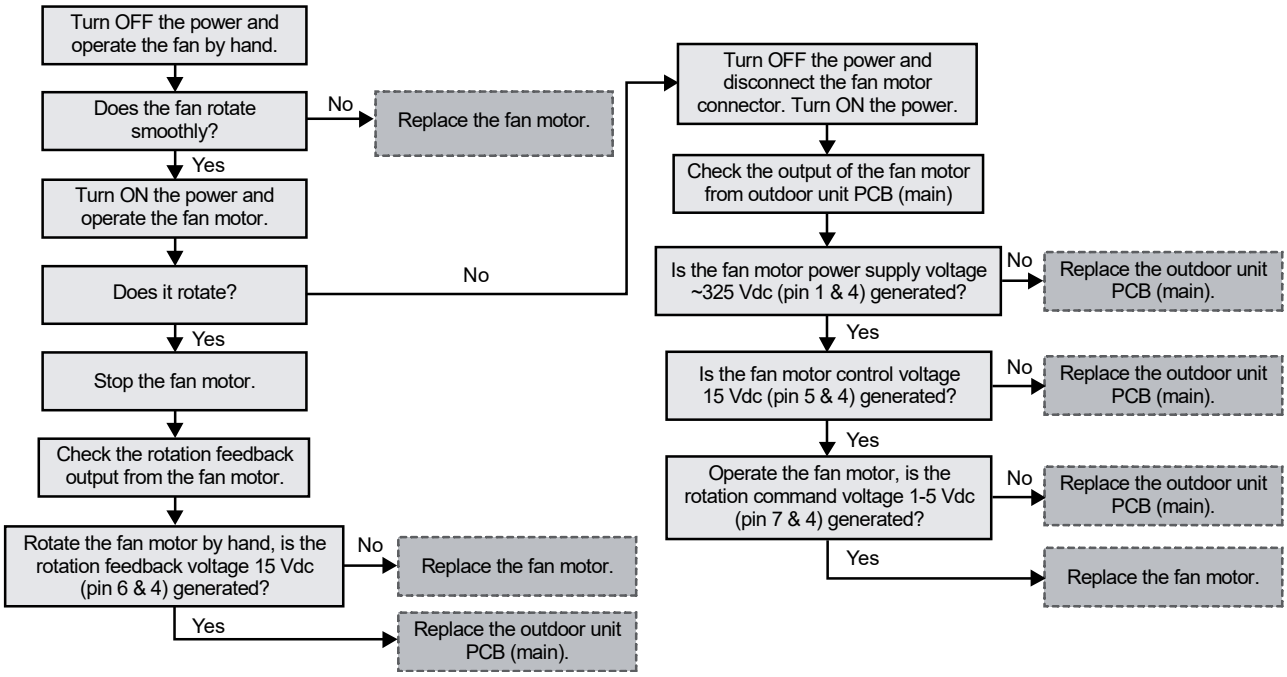

18.5.32 Input Over Current Detection (F16)

Malfunction Decision Conditions:

During operation of cooling and heating, when outdoor current above 30.0A is detected by the current transformer (CT) in the outdoor unit PCB.

Malfunction Caused:

1 Excessive refrigerant.
2 Faulty outdoor unit PCB (main).

Abnormality Judgment:

Continue 3 times in 20 minutes.

Troubleshooting: **Caution** For safety reason and to prevent component breakdown, always switch off the power before remove and connect the component.

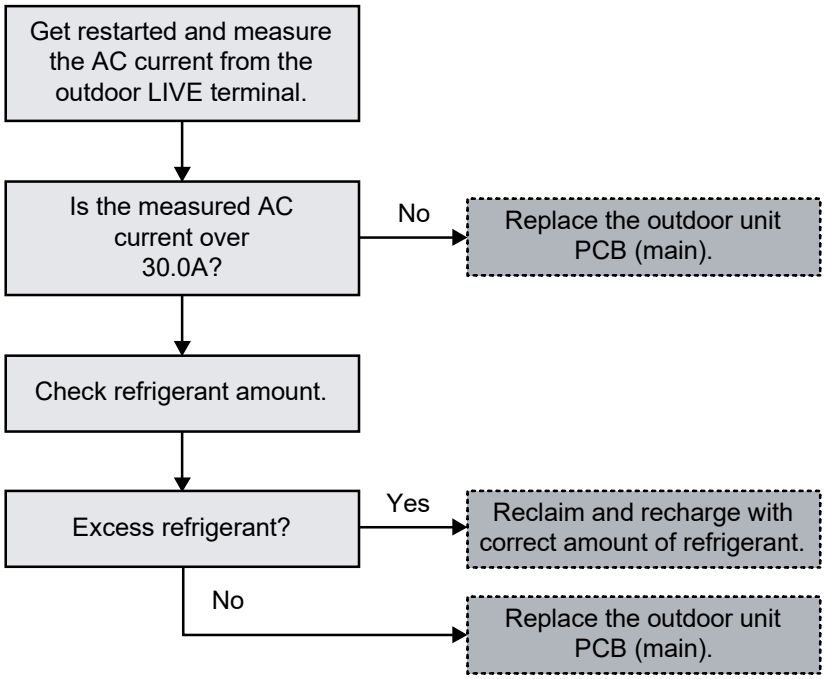

18.5.33 Compressor Overheating (F20)

Malfunction Decision Conditions:

During operation of cooling and heating, when temperature above 112°C is detected by the compressor tank temperature sensor.

Malfunction Caused:

1 Faulty compressor tank temperature sensor.
2 2/3 way valve closed.
3 Refrigerant shortage (refrigerant leakage).
4 Clogged expansion valve or strainer.
5 Faulty outdoor unit PCB (main).
6 Faulty compressor.

Abnormality Judgment:

Continue 4 times in 30 minutes.

Troubleshooting: Caution

For safety reason and to prevent component breakdown, always switch off the power before remove and connect the component.

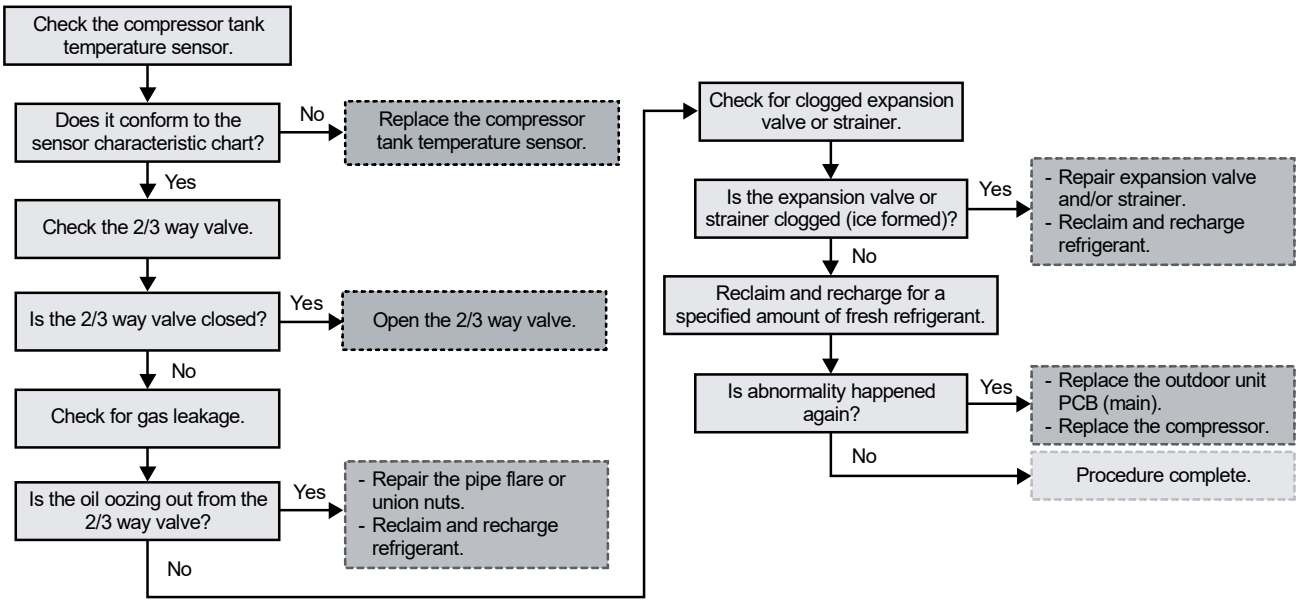

18.5.34 IPM Overheating (F22)

Malfunction Decision Conditions:

During operation of cooling and heating, when temperature 95°C is detected by the outdoor IPM temperature sensor.

Malfunction Caused:

1 Faulty outdoor unit fan motor.
2 Faulty outdoor unit PCB (main).

Abnormality Judgment:

Continue 3 times in 30 minutes.

Troubleshooting: Caution

For safety reason and to prevent component breakdown, always switch off the power before remove and connect the component.

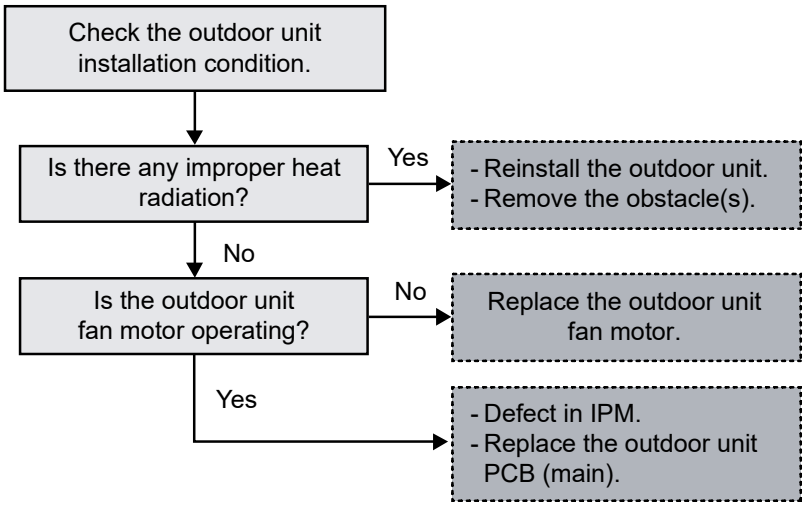

18.5.35 Output Over Current Detection (F23)

Malfunction Decision Conditions:

During operation of cooling and heating, when outdoor DC current is above set value is detected by the IPM DC Peak sensing circuitry in the outdoor unit PCB (main).

Malfunction Caused:

1 Faulty outdoor unit PCB (main).
2 Faulty compressor.

Abnormality Judgment:

Continue for 7 times.

Troubleshooting:

Caution For safety reason and to prevent component breakdown, always switch off the power before remove and connect the component.

Check the compressor winding resistance:
- Turn OFF the power and disconnect the harnesses U, V, and W.
- Measure the winding resistance between U-V, V-W, and W-U.

→ Are the compressor's winding resistance (U-V, V-W, or U-W) shorted?

- Yes → - Compressor defective due to winding shorted. - Replace the compressor.
- No → - Outdoor eletronic circuit defect due to power transistor shorted. - Replace the outdoor unit PCB (main).

■ Checking the power transistor

- Never touch any live parts for at least 10 minutes after turning off the circuit breaker.
- If unavoidably necessary touch a live part, make sure the power transistor's supply voltage is below 50 V using the tester.
- For the UVW, make measurements at the Faston terminal on the board or the relay connector.

Tester's negative terminal	Power transistor (+)	UVW	Power transistor (-)	UVW
Tester's positive terminal	UVW	Power transistor (+)	UVW	Power transistor (-)
Normal resistance	Several kohms to several Mohms			
Abnormal resistance	0 or ∞			

18.5.36 Refrigeration Cycle Abnormality (F24)

Malfunction Decision Conditions:

1. During compressor running (heating / cooling) for more than 10 minutes except deice, pumpdown and test mode.
2. During heating / cooling, water outlet and water inlet difference is less than 1°C.
3. During heating / cooling, high pressure < 1MPa (143 Psi) for more than 10 minutes or < 0.2 MPa (28 Psi) for more than 5 minutes.
4. During heating / cooling, discharge temperature - saturation temperature of high pressure ≥ 60°C.

Malfunction Caused:

1. Refrigerant shortage (refrigerant leakage).
2. Faulty indoor water inlet, indoor water outlet, compressor discharge temp sensor or high pressure sensor.
3. 2/3 way valve closed.
4. Clogged expansion valve or strainer.
5. Faulty indoor or outdoor PCB (main).

Abnormality Judgment:

Continue 2 times in 30 minutes.

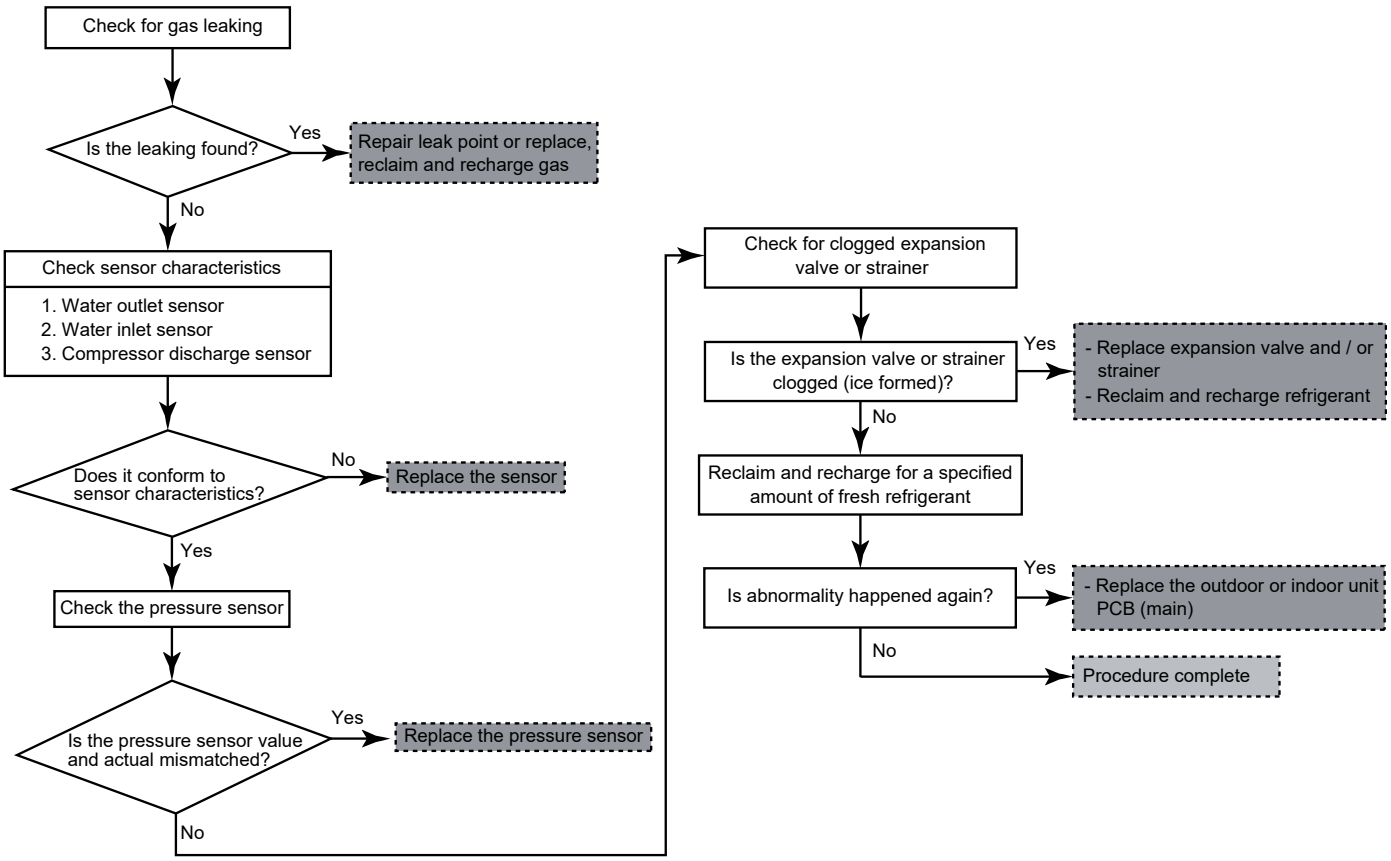

18.5.37 Four Way Valve Abnormality (F25)

Malfunction Decision Conditions:

1 During heating operation, when the indoor pipe temperature of thermostat ON indoor unit < 0°C.
2 During cooling operation, when the indoor pipe temperature of thermostat ON indoor unit > 45°C.

Malfunction Caused:

1 Faulty sensor.
2 Faulty connector connection.
3 Faulty outdoor unit PCB (noise filter/main).
4 Faulty four way valve.

Abnormality Judgment:

Continue 4 times in 30 minutes.

Troubleshooting: Caution

For safety reason and to prevent component breakdown, always switch off the power before remove and connect the component.

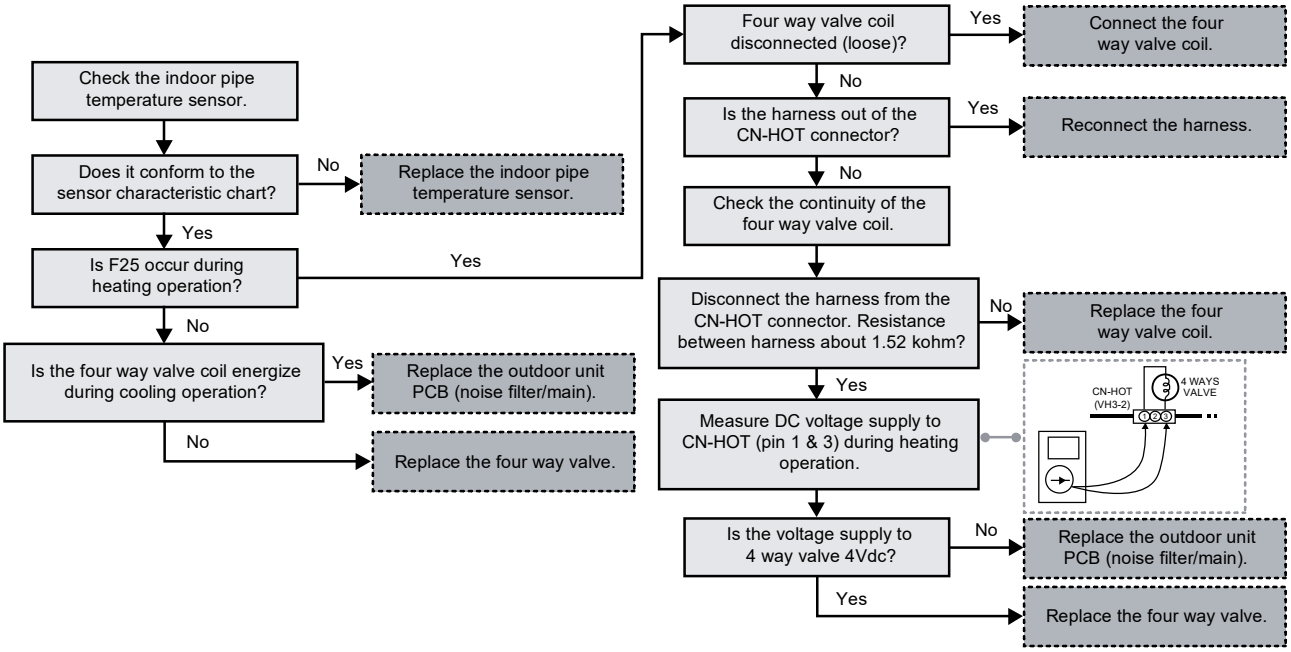

18.5.38 Outdoor High Pressure Switch Abnormal (F27)

Malfunction Decision Conditions:

During compressor stop, and outdoor high pressure switch is remain opened.

Malfunction Caused:

1 Faulty connector connection.
2 Faulty switch.
3 Faulty outdoor unit PCB (main).

Abnormality Judgment:

Continue for 1 minute.

Troubleshooting: **Caution** For safety reason and to prevent component breakdown, always switch off the power before remove and connect the component

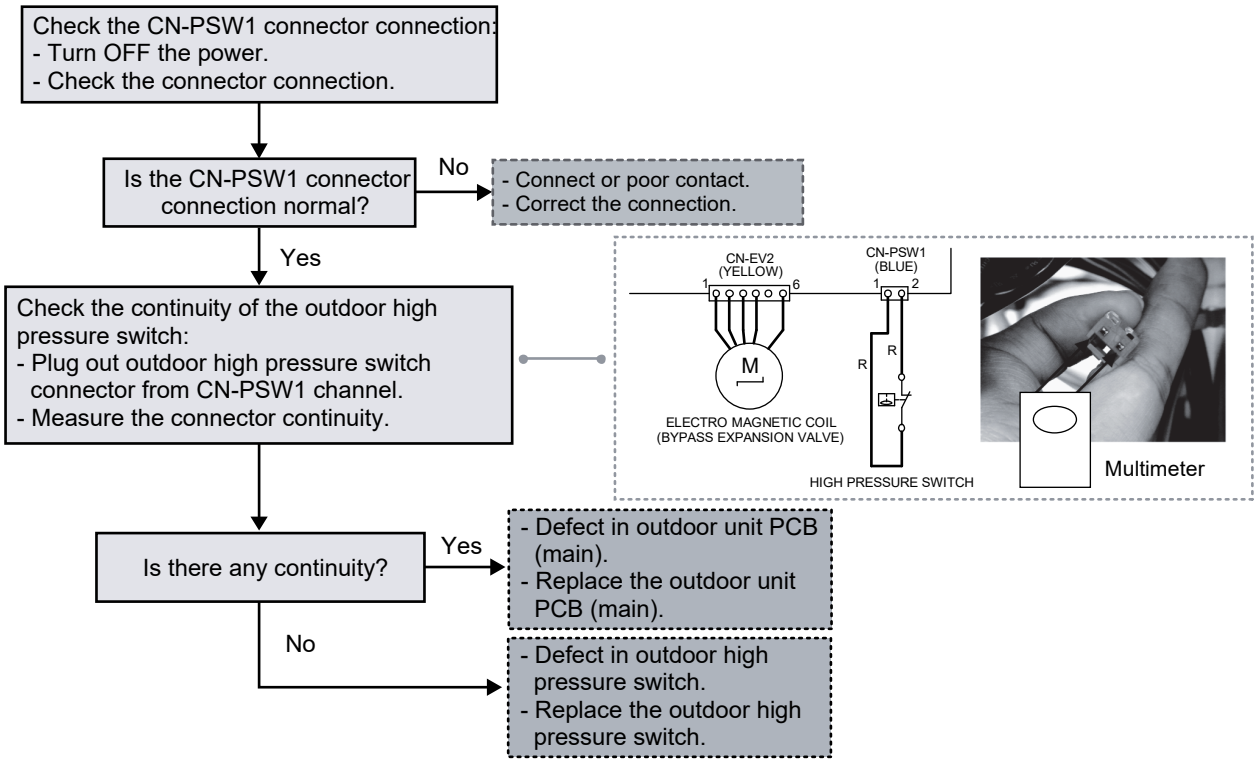

18.5.39 Low Discharge Superheat (F29)

Malfunction Decision Conditions:

During startup and operation of cooling and heating, the temperatures detected by the outdoor pipe temperature sensor are used to determine sensor error.

Malfunction Caused:

1 Faulty connector connection.
2 Faulty sensor.
3 Faulty outdoor unit PCB (main).
4 Faulty High Pressure Switch
5 Refrigerant shortage (refrigerant leakage).

Abnormality Judgment:

1 times occurrence within 2550 minutes.

Troubleshooting: Caution

For safety reason and to prevent component breakdown, always switch off the power before remove and connect the component.

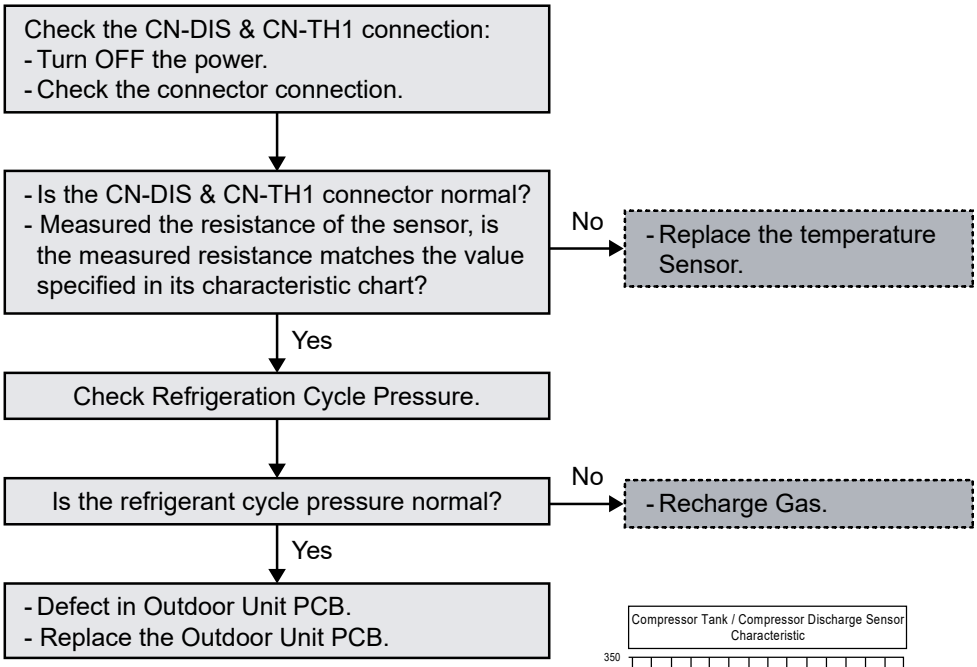

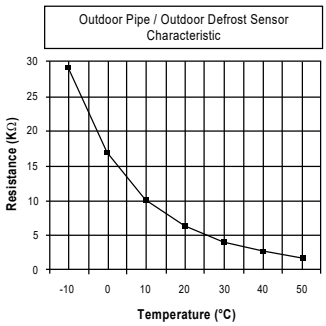

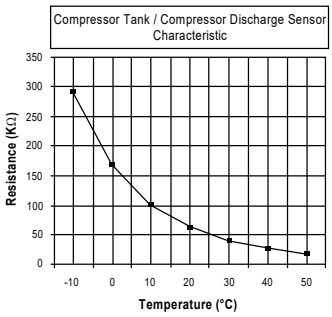

18.5.40 Indoor Water Outlet Temperature Sensor 2 Abnormality (F30)

Malfunction Decision Conditions:

During startup and operation of cooling and heating, the temperatures detected by the indoor water outlet temperature sensor 2 are used to determine sensor error.

Malfunction Caused:

1 Faulty connector connection.
2 Faulty sensor.
3 Faulty indoor unit PCB.

Abnormality Judgment:

Continue for 5 seconds.

Troubleshooting: Caution

For safety reason and to prevent component breakdown, always switch off the power before remove and connect the component.

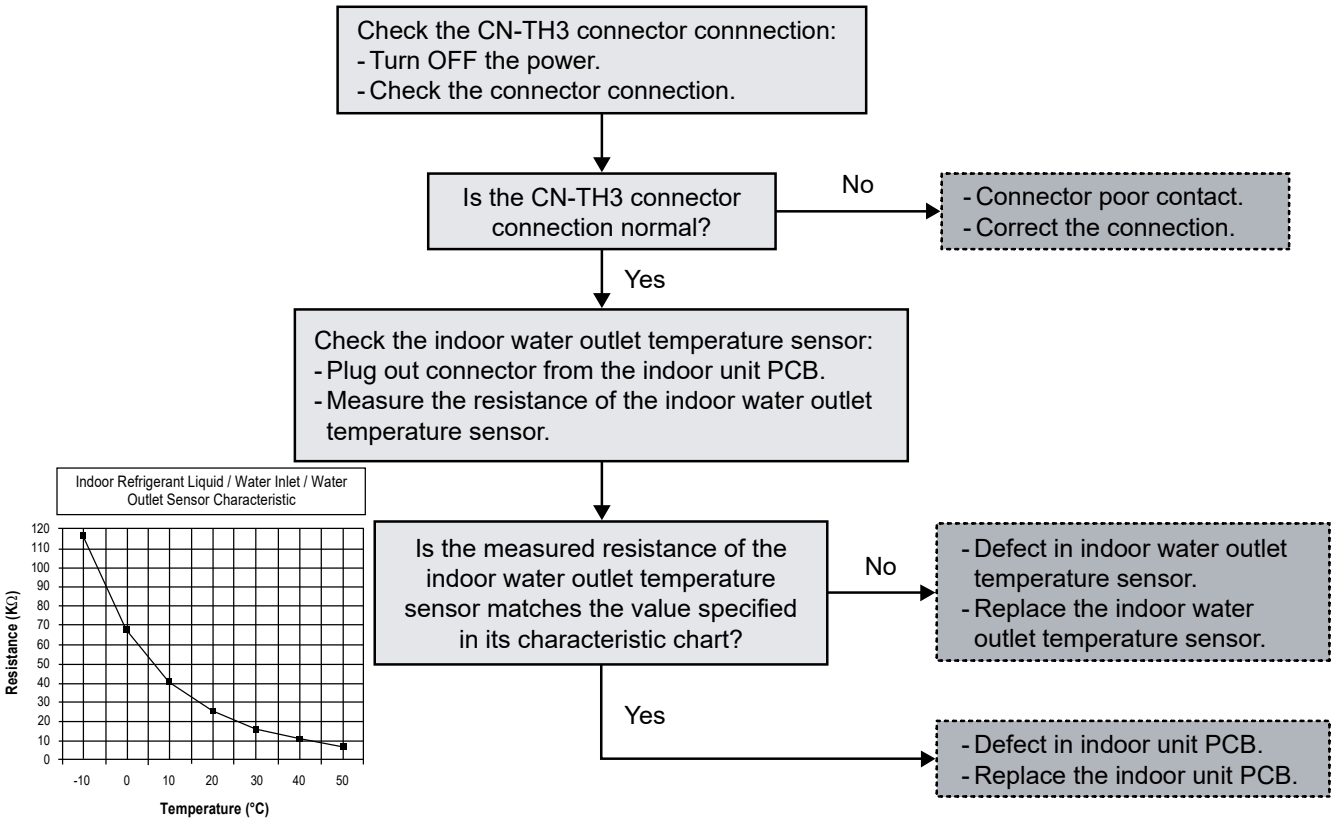

18.5.41 Internal Thermostat (TH1) Error (F32)

Malfunction Decision Conditions:

- During standby and operation of cooling and heating, control panel thermostat error occur.
- When room sensor select use internal thermostat.

Malfunction Caused:

Abnormality of internal thermostat from R/C 1 or R/C 2.

Trigger Conditions:

1 Internal thermostat open circuit for 5 second continuously detection, R/C display 0°C
2 Internal thermostat short circuit for 5 second continuously detection, R/C display 0°C

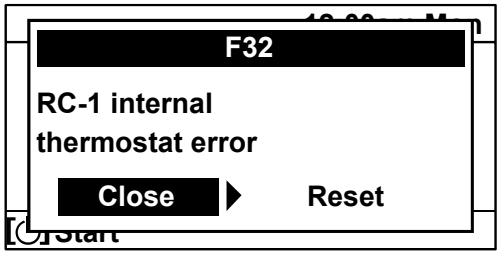

Error code display method

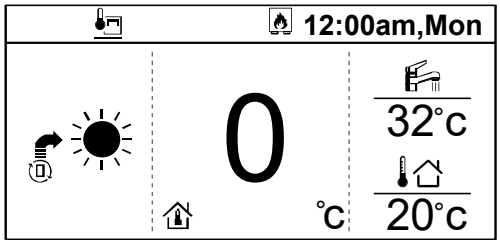

Room Temperature will show 0°C on R/C display

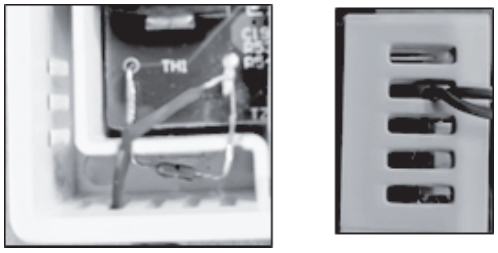

Internal Thermostat (TH1)

18.5.42 Outdoor Air Temperature Sensor Abnormality (F36)

Malfunction Decision Conditions:

During startup and operation of cooling and heating, the temperatures detected by the outdoor air temperature sensor are used to determine sensor error.

Malfunction Caused:

1 Faulty connector connection.
2 Faulty sensor.
3 Faulty outdoor unit PCB (main).

Abnormality Judgment:

Continue for 5 seconds.

Troubleshooting: Caution

For safety reason and to prevent component breakdown, always switch off the power before remove and connect the component.

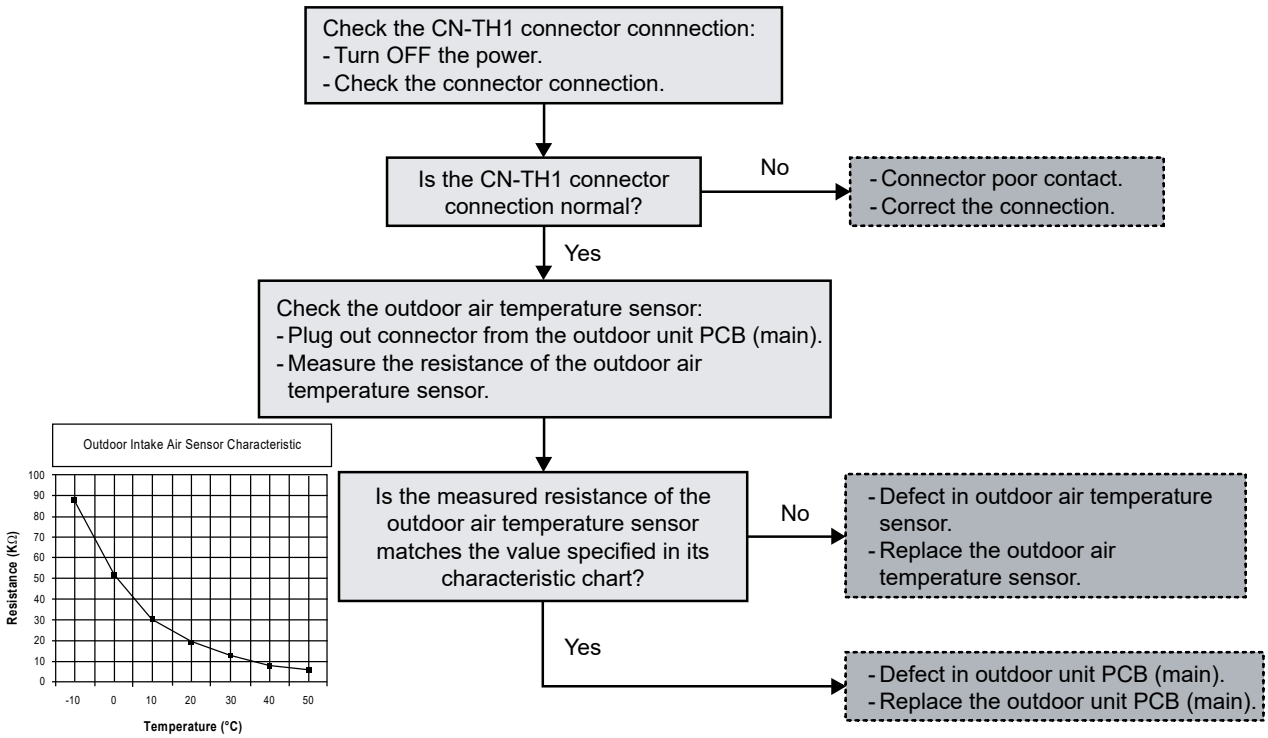

18.5.43 Indoor Water Inlet Temperature Sensor Abnormality (F37)

Malfunction Decision Conditions:

During startup and operation of cooling and heating, the temperatures detected by the indoor water inlet temperature sensor are used to determine sensor error.

Malfunction Caused:

1 Faulty connector connection.
2 Faulty sensor.
3 Faulty indoor unit PCB (main).

Abnormality Judgment:

Continue for 5 seconds.

Troubleshooting: Caution

For safety reason and to prevent component breakdown, always switch off the power before remove and connect the component.

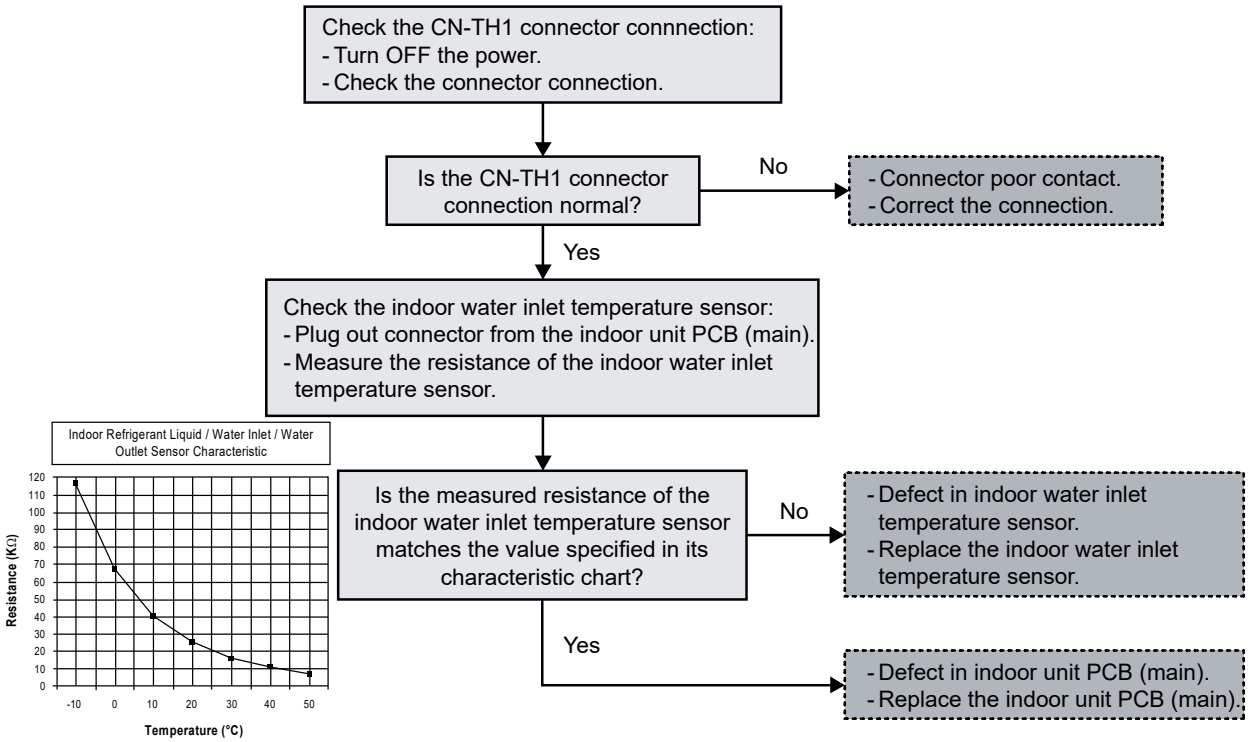

18.5.44 Outdoor Discharge Pipe Temperature Sensor Abnormality (F40)

Malfunction Decision Conditions:

During startup and operation of cooling and heating, the temperatures detected by the outdoor discharge pipe temperature sensor are used to determine sensor error.

Malfunction Caused:

1 Faulty connector connection.
2 Faulty sensor.
3 Faulty outdoor unit PCB (main).

Abnormality Judgment:

Continue for 5 seconds.

Troubleshooting:

Caution For safety reason and to prevent component breakdown, always switch off the power before remove and connect the component.

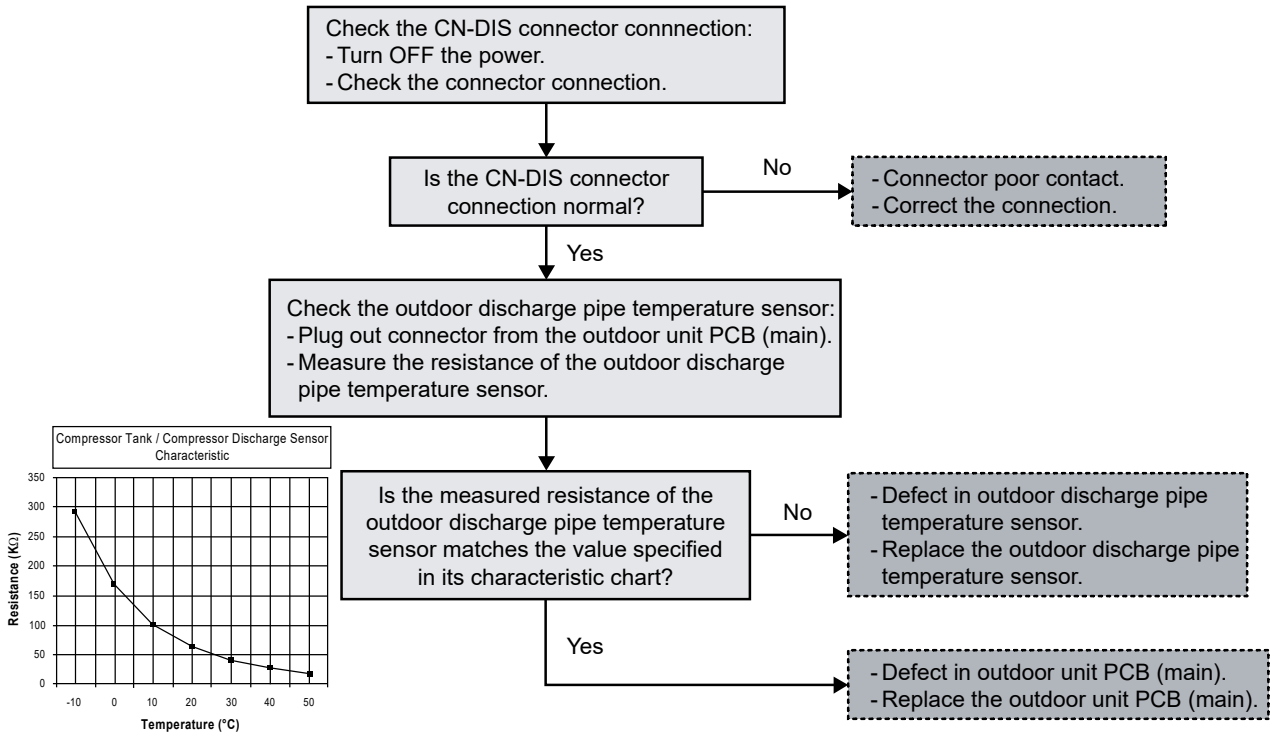

18.5.45 Power Factor Correction (PFC) Abnormality (F41)

Malfunction Decision Conditions:

During operation of cooling and heating, when the PFC protection circuitry in the outdoor unit PCB (main) senses abnormal high DC voltage level.

Malfunction Caused:

1 Power supply surge.
2 Compressor windings not uniform.
3 Faulty outdoor unit PCB (main).

Abnormality Judgment:

Continue 4 times in 10 minutes.

Troubleshooting: Caution

For safety reason and to prevent component breakdown, always switch off the power before remove and connect the component.

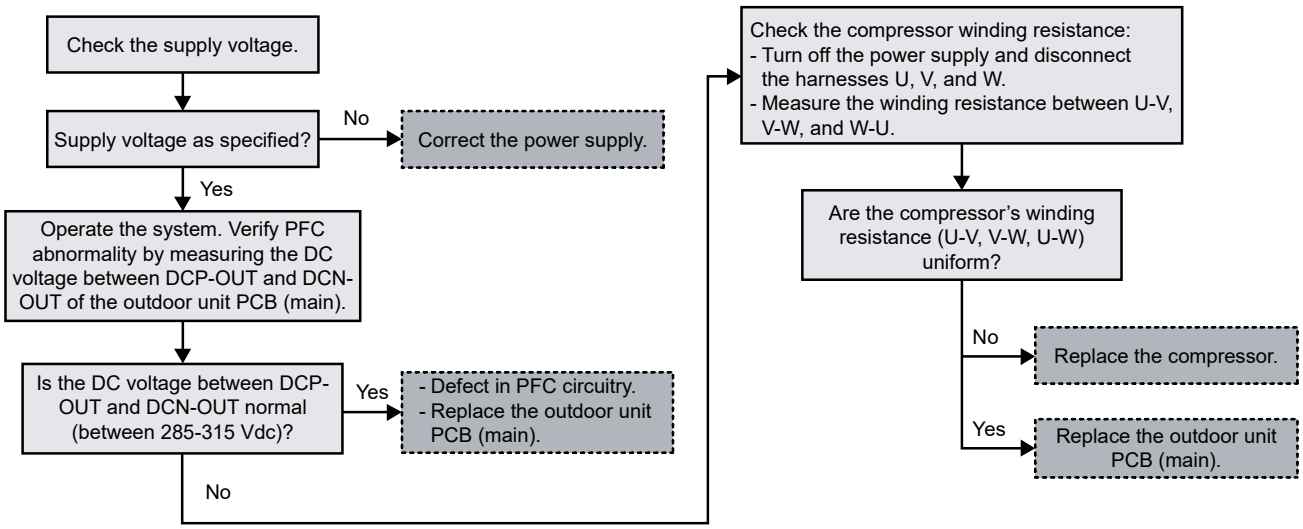

18.5.46 Outdoor Pipe Temperature Sensor Abnormality (F42)

Malfunction Decision Conditions:

During startup and operation of cooling and heating, the temperatures detected by the outdoor pipe temperature sensor are used to determine sensor error.

Malfunction Caused:

1 Faulty connector connection.
2 Faulty sensor.
3 Faulty outdoor unit PCB (main).

Abnormality Judgment:

Continue for 5 seconds.

Troubleshooting:

Caution For safety reason and to prevent component breakdown, always switch off the power before remove and connect the component.

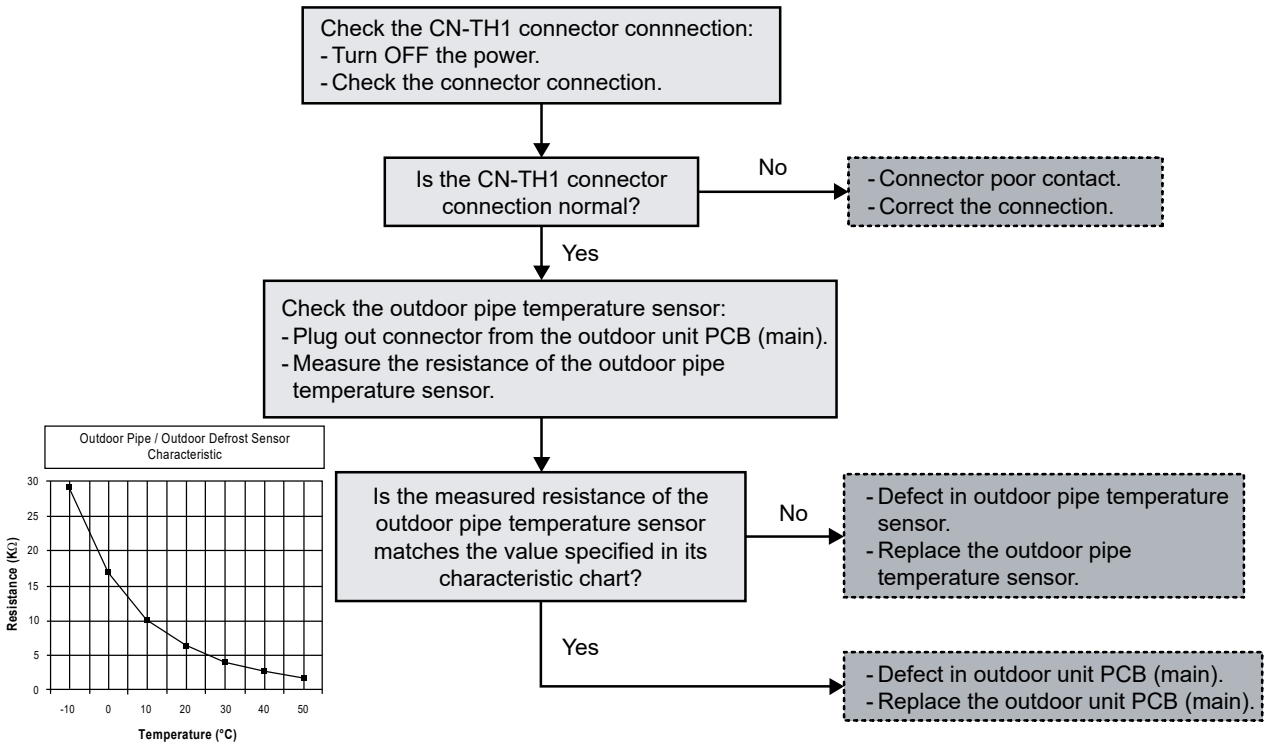

18.5.47 Outdoor Defrost Temperature Sensor Abnormality (F43)

Malfunction Decision Conditions:

During startup and operation of cooling and heating, the temperatures detected by the outdoor defrost temperature sensor are used to determine sensor error.

Malfunction Caused:

1 Faulty connector connection.
2 Faulty sensor.
3 Faulty outdoor unit PCB (main).

Abnormality Judgment:

Continue for 5 seconds.

Troubleshooting:

Caution For safety reason and to prevent component breakdown, always switch off the power before remove and connect the component.

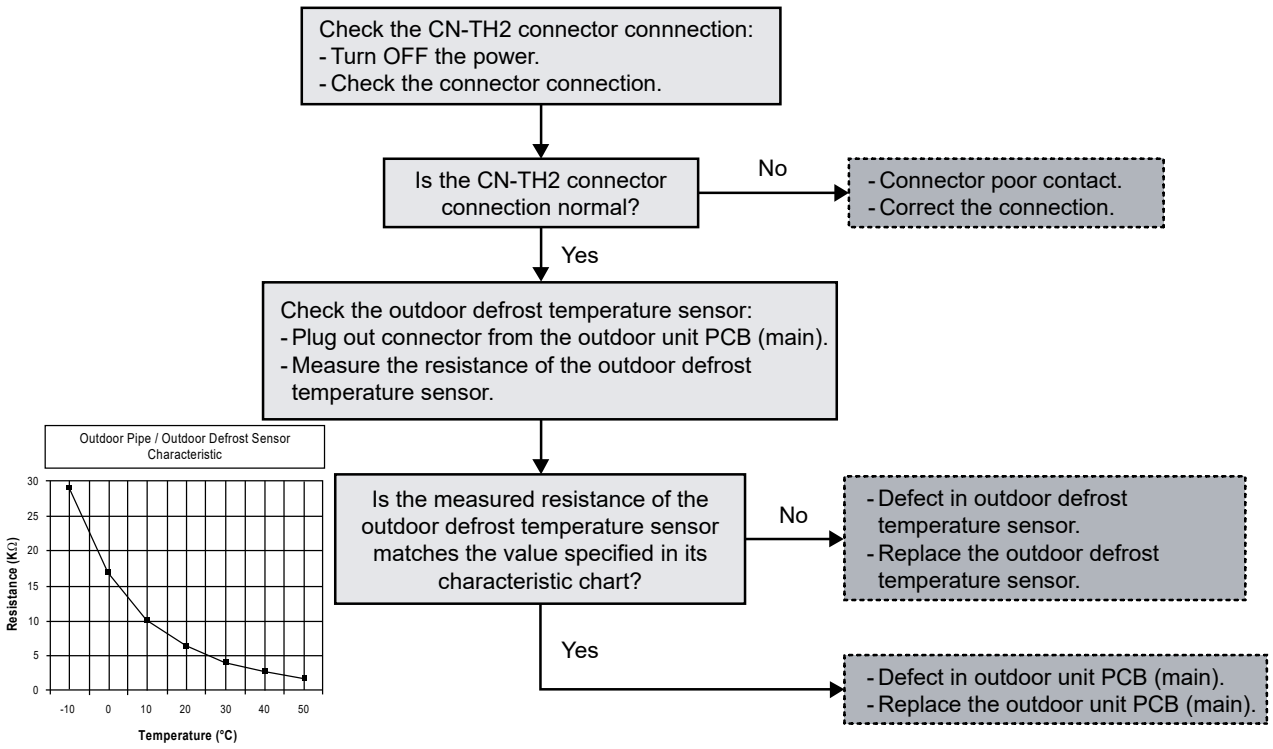

18.5.48 Indoor Water Outlet Temperature Sensor Abnormality (F45)

Malfunction Decision Conditions:

During startup and operation of cooling and heating, the temperatures detected by the indoor water outlet temperature sensor are used to determine sensor errors.

Malfunction Caused:

1 Faulty connector connection.
2 Faulty sensor.
3 Faulty indoor unit PCB (main).

Abnormality Judgment:

Continue for 5 seconds.

Troubleshooting: Caution

For safety reason and to prevent component breakdown, always switch off the power before remove and connect the component.

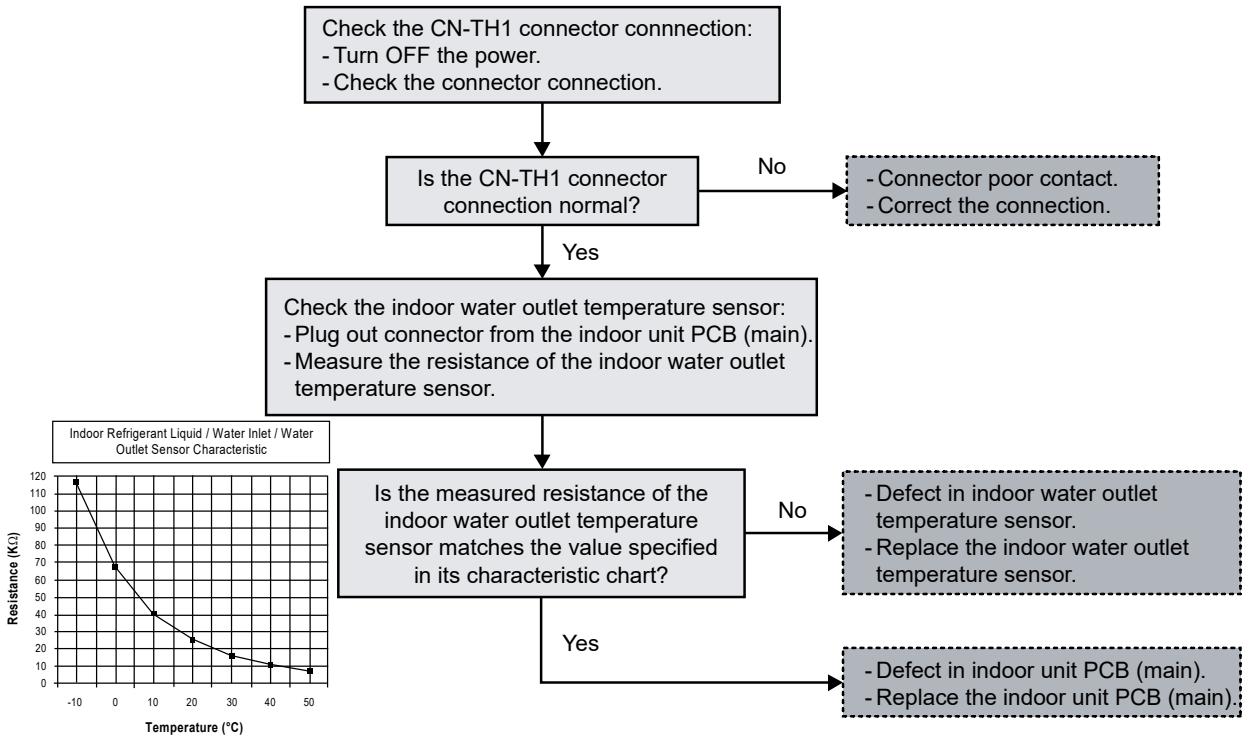

18.5.49 Outdoor Current Transformer Open Circuit (F46)

Malfunction Decision Conditions:

A current transformer (CT) open circuit is detected by checking the compressor running frequency (⩾ rated frequency) and CT detected input current (< 0.65 A) for continuously 20 seconds.

Malfunction Caused:

1 CT defective.
2 Faulty outdoor unit PCB (main).
3 Compressor defective (low compression).

Abnormality Judgment:

Continue 3 times in 20 minutes.

Troubleshooting: Caution

For safety reason and to prevent component breakdown, always switch off the power before remove and connect the component.

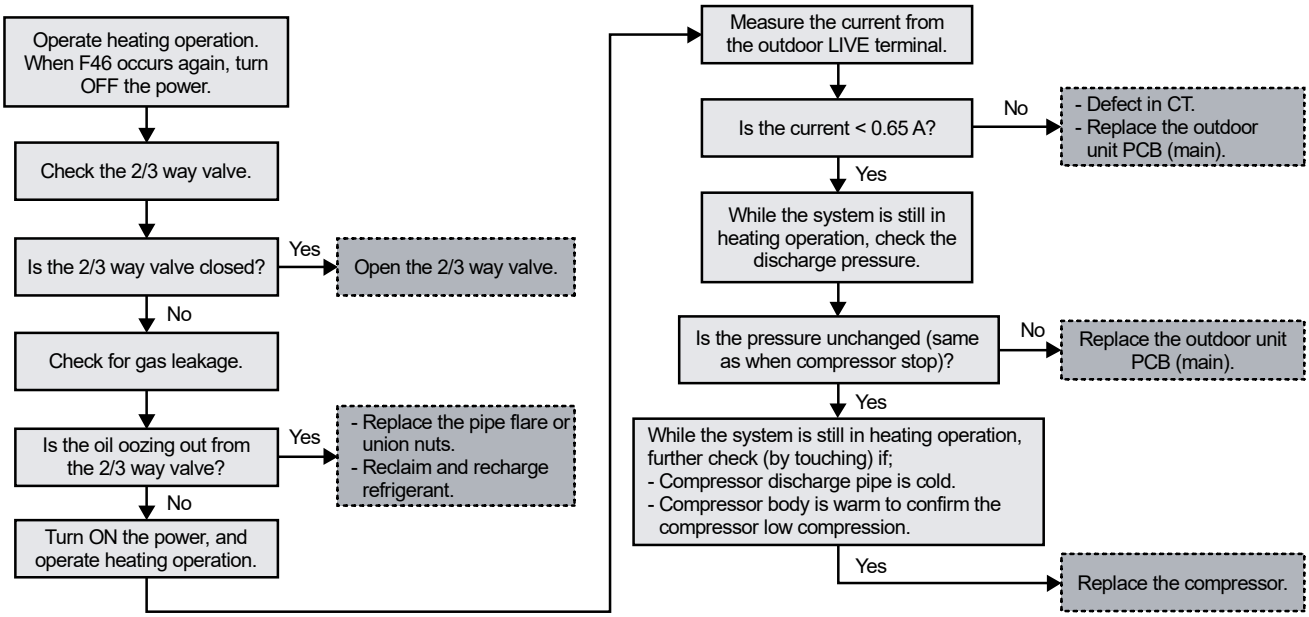

18.5.50 Evaporator Outlet Sensor Error (F48)

Malfunction Decision Conditions:

During startup and operation of cooling and heating, the temperatures detected by the indoor water outlet temperature sensor are used to determine sensor errors.

Malfunction Caused:

1 Faulty connector connection.
2 Faulty sensor.
3 Faulty indoor unit PCB (main).

Abnormality Judgment:

Continue for 5 seconds.

Troubleshooting:

Caution For safety reason and to prevent component breakdown, always switch off the power before remove and connect the component.

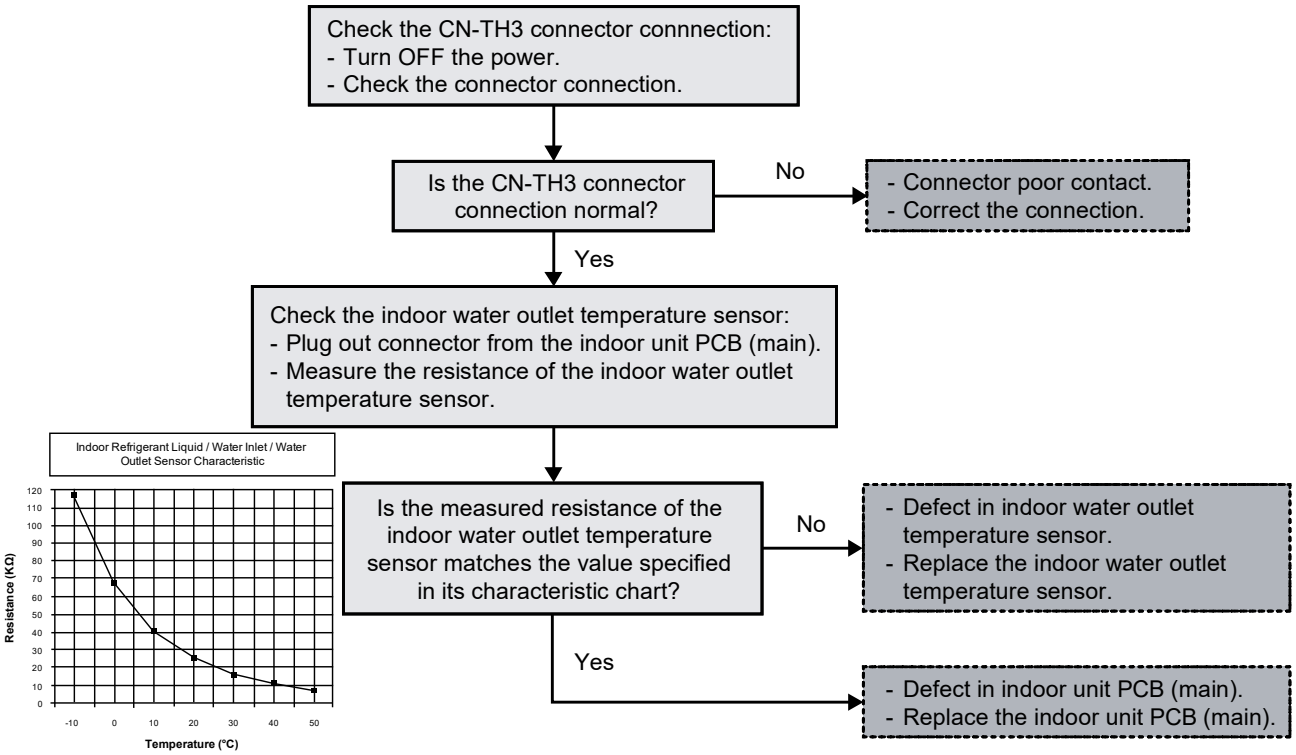

18.5.51 Outdoor Bypass Outlet Temperature Sensor (F49)

Malfunction Decision Conditions:

During start up and operation of cooling and heating, the temperature detected by outdoor bypass sensor is used to determine sensor error.

Malfunction Caused:

1 Faulty connector connection
2 Faulty sensor
3 Faulty outdoor unit PCB (main)

Abnormality Judgment:

Continuous for 5 seconds

Troubleshooting:

Caution For safety reason and to prevent component breakdown, always switch off the power before remove and connect the component.

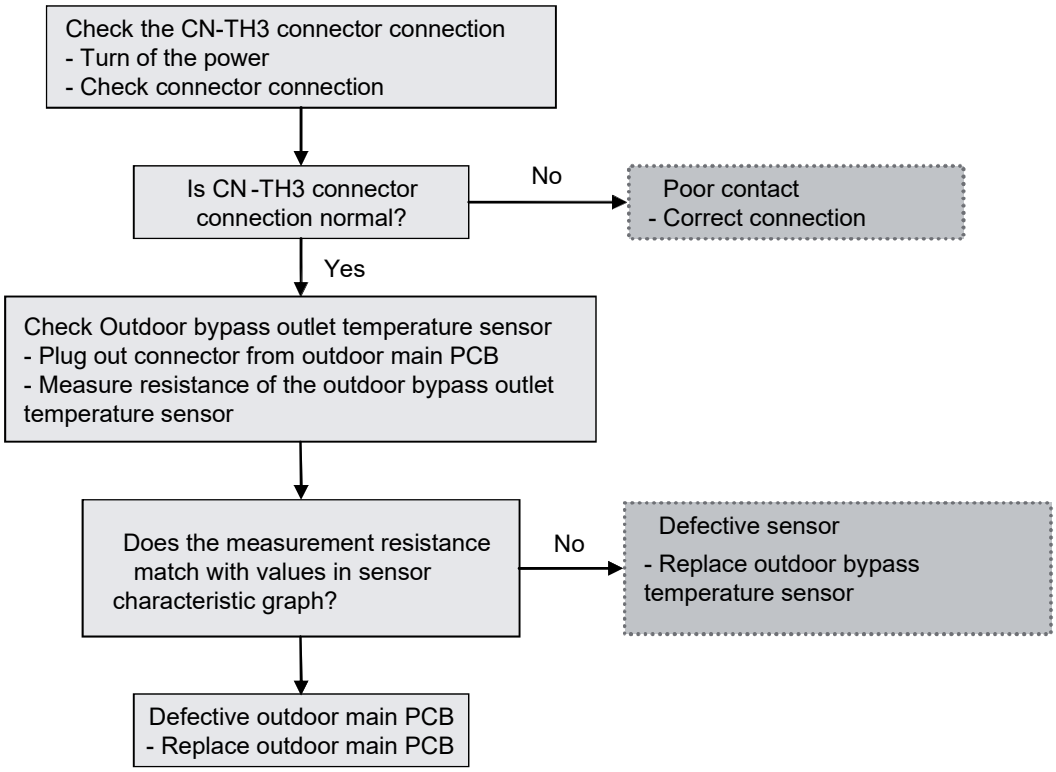

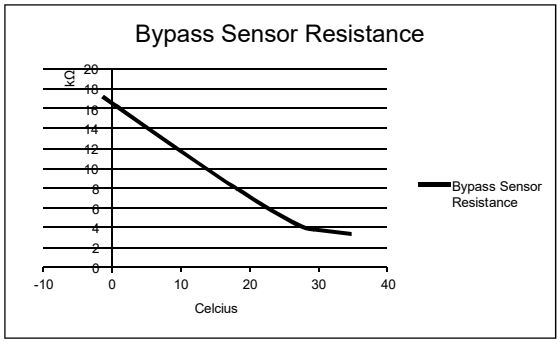

19. Disassembly and Assembly Instructions

> ⚠ **WARNING**
>
> High Voltage are generated in the electrical parts area by the capacitor. Ensure that the capacitor has discharged sufficiently before proceeding with repair work. Failure to heed this caution may result in electric shocks.

19.1 To Remove Front Plate

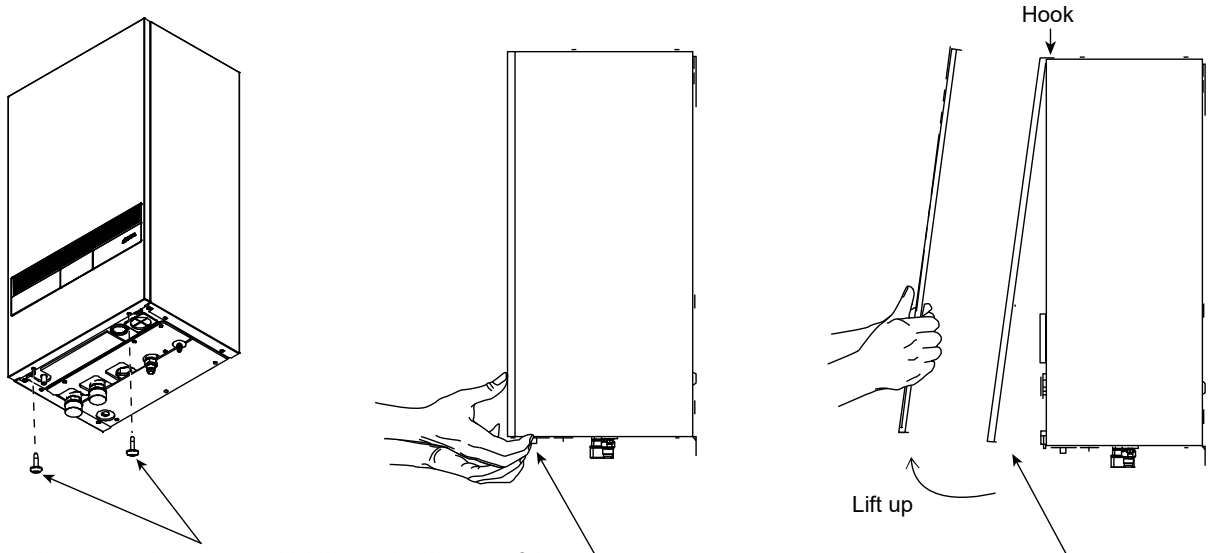

1. Remove the 2 mounting screws which located at bottom of the front plate.
2. Gently pull the lower section of the front plate towards you to remove the front plate from left and right hooks.
3. Hold the left edge and right edge of front plate to lift up front plate from hooks.

19.2 To Open Control Board Cover

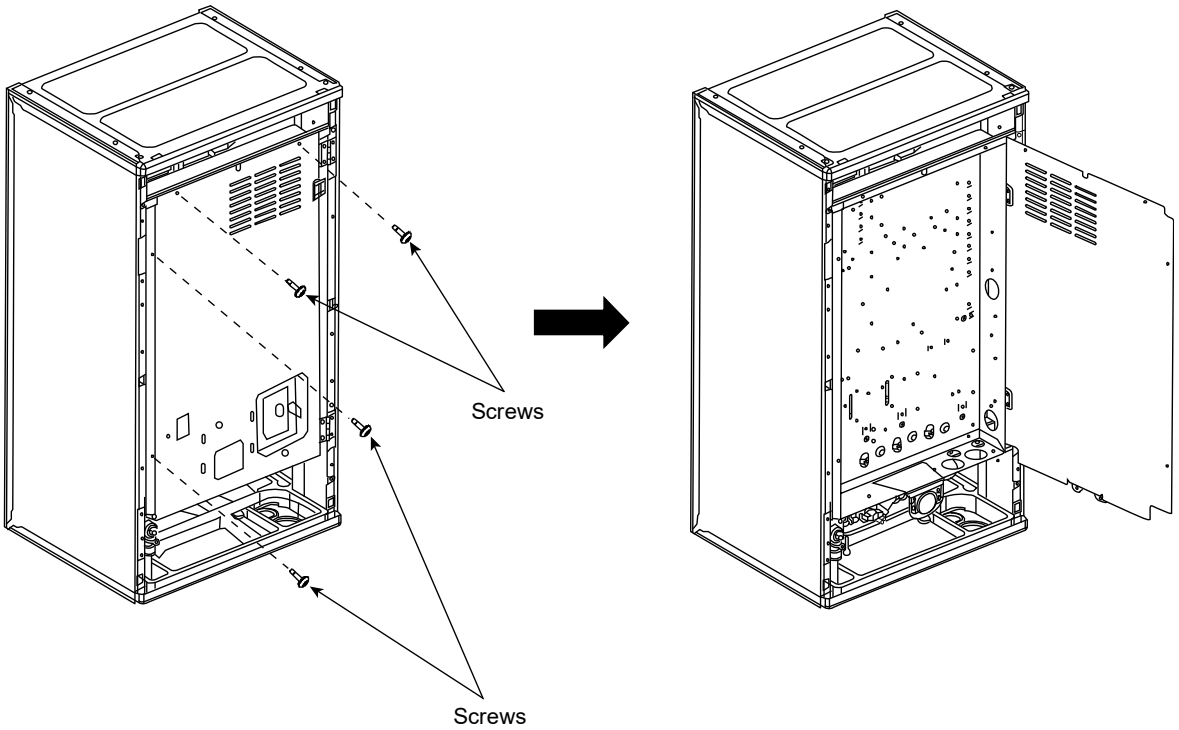

1. Remove 4 screws from the Control Board Cover.

19.3 To Remove Control Panel

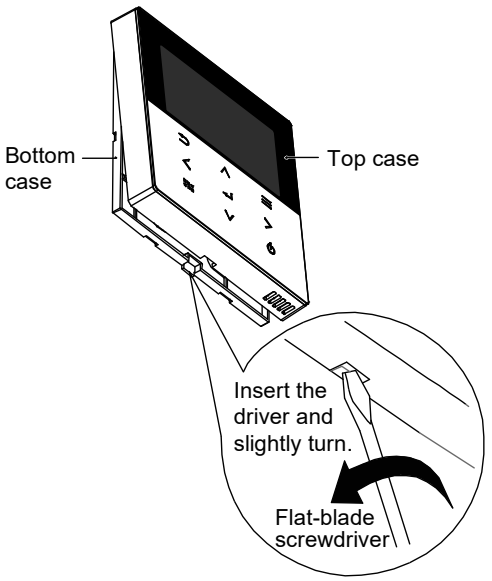

1. Remove the top case from the bottom case.

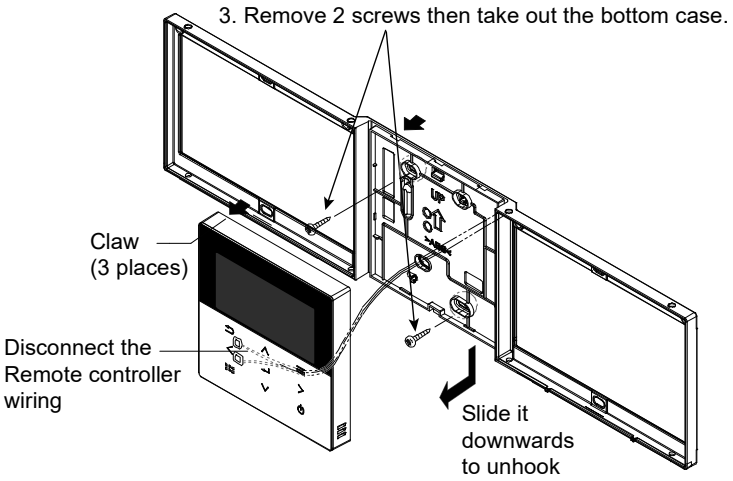

2. Disconnect the Remote Controller wiring.

19.4 To Remove RCCB

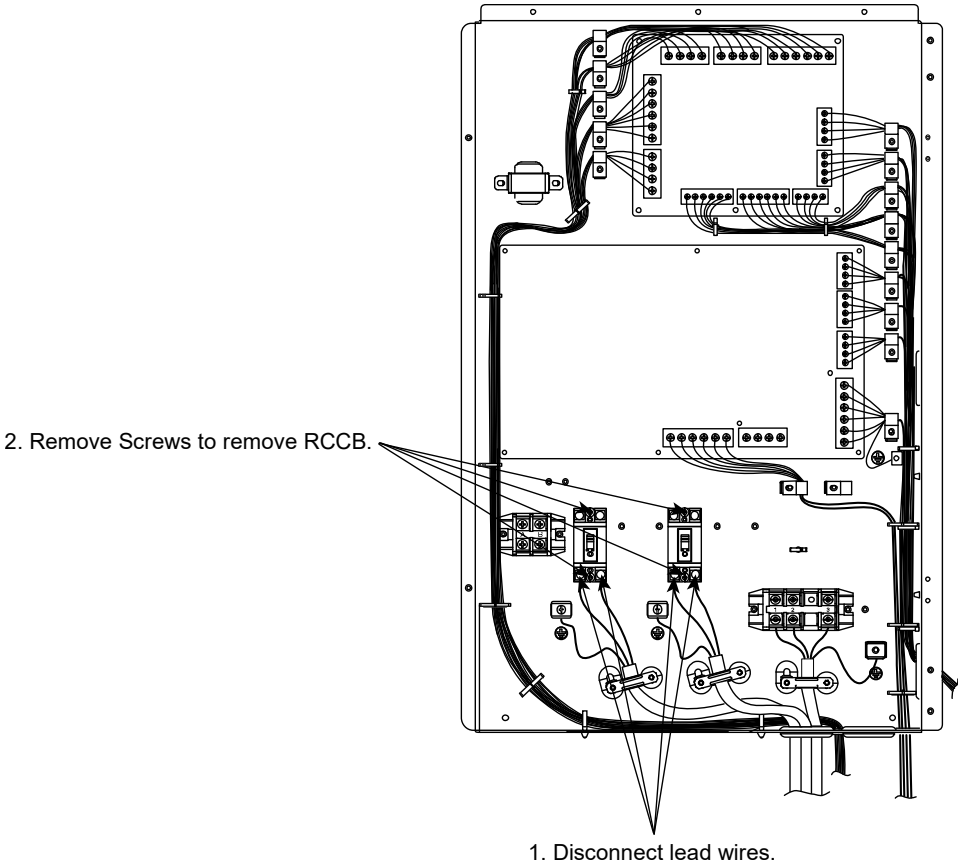

19.5 To Remove Transformer and Electronic Controller Board

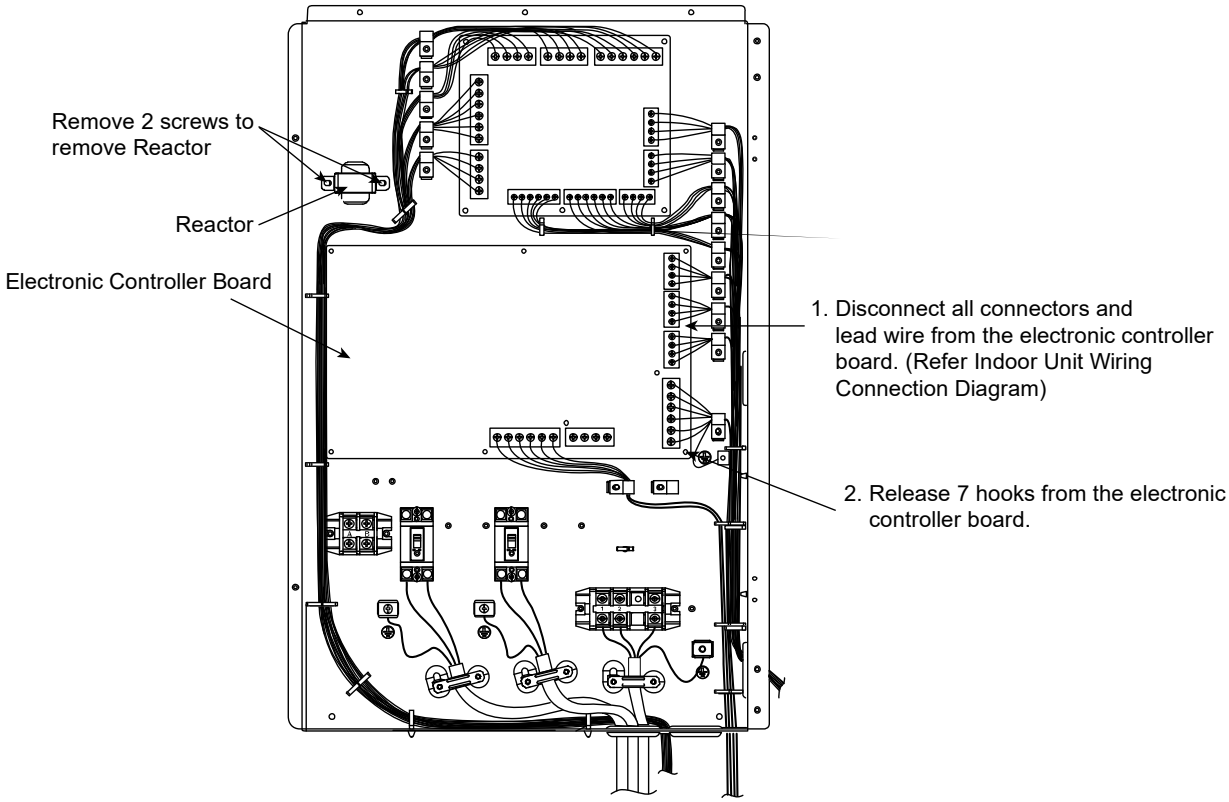

19.6 To Open Control Board

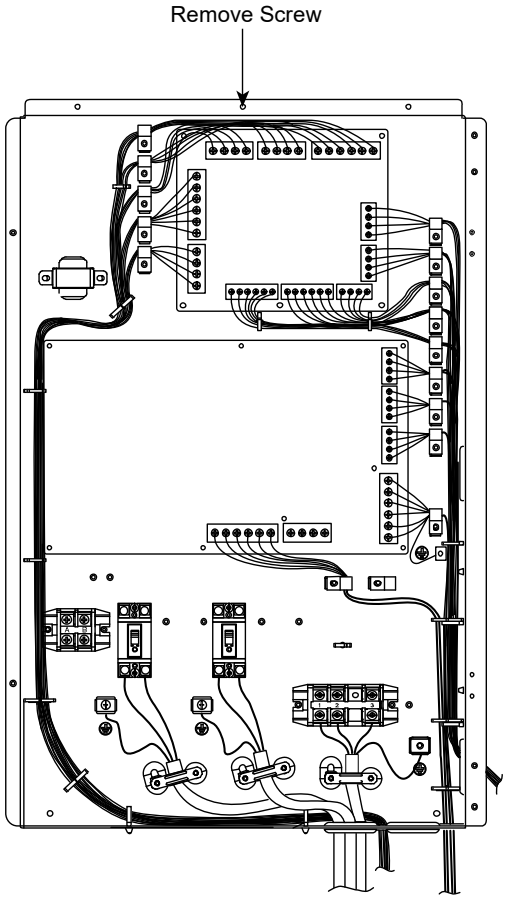

19.7 To Remove Pressure Relief Valve, Air Purge Valve and Flow Sensor

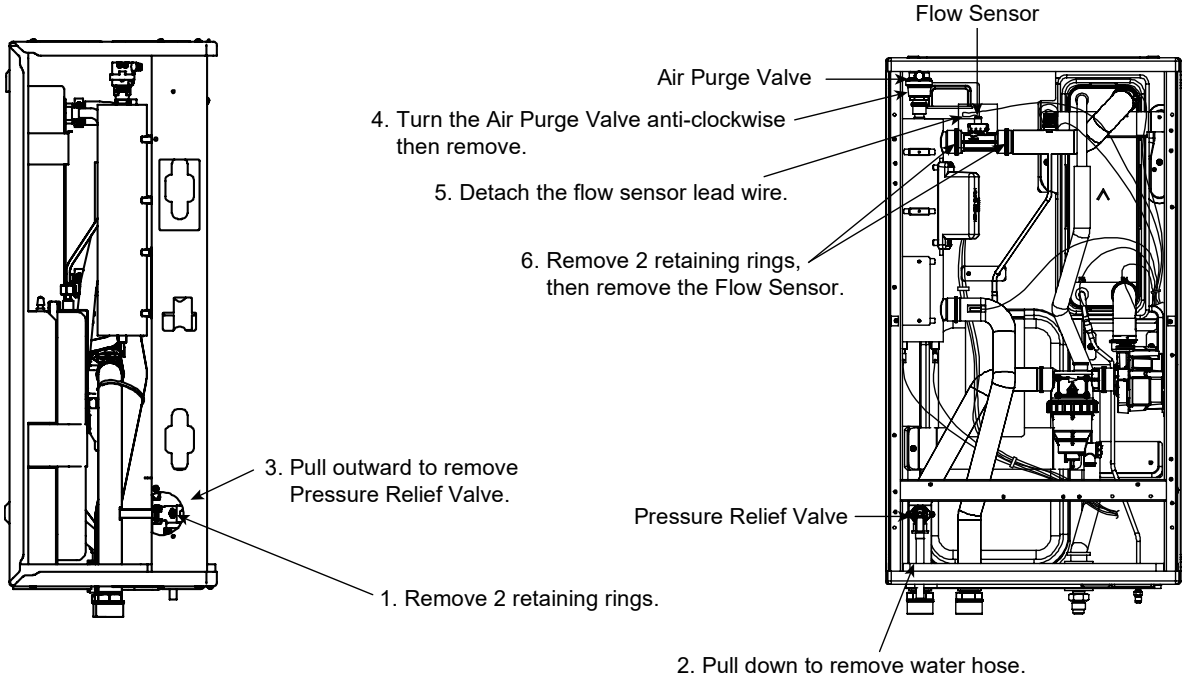

⚠ When reinstall Flow Switch, ensure the arrow on the flow switch is parallel with the pipe shaft and is facing in the direction of flow.

⚠ During reinstall Air Purge Valve.

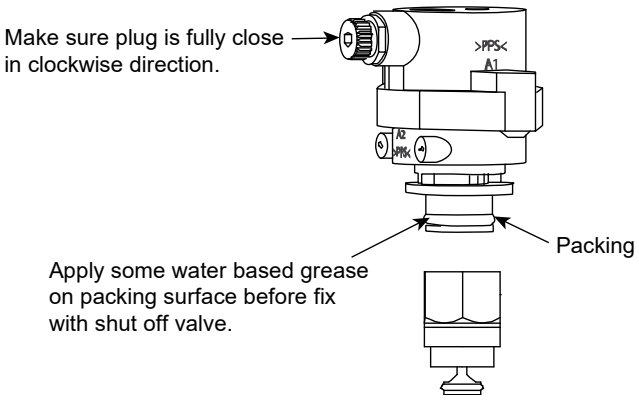

During reinstall Flow Sensor

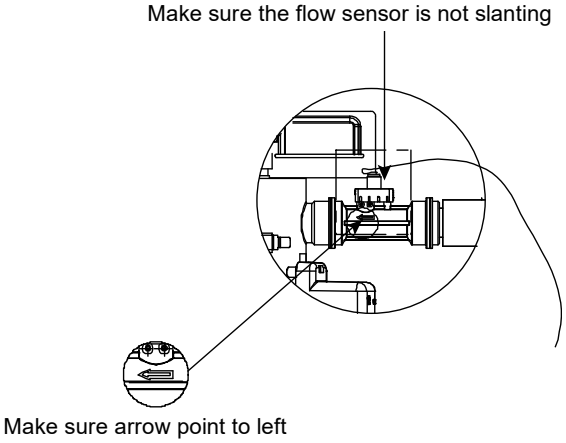

19.8 To Remove Water Pump and Bottle Complete

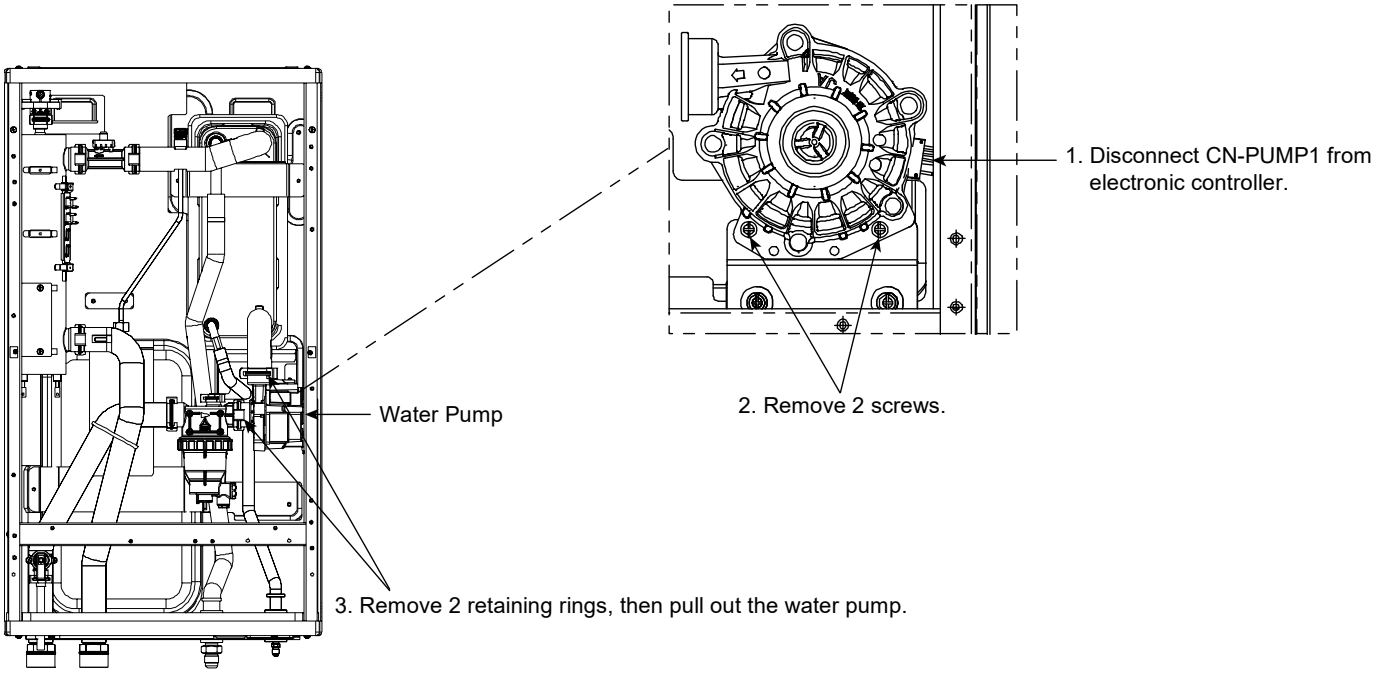

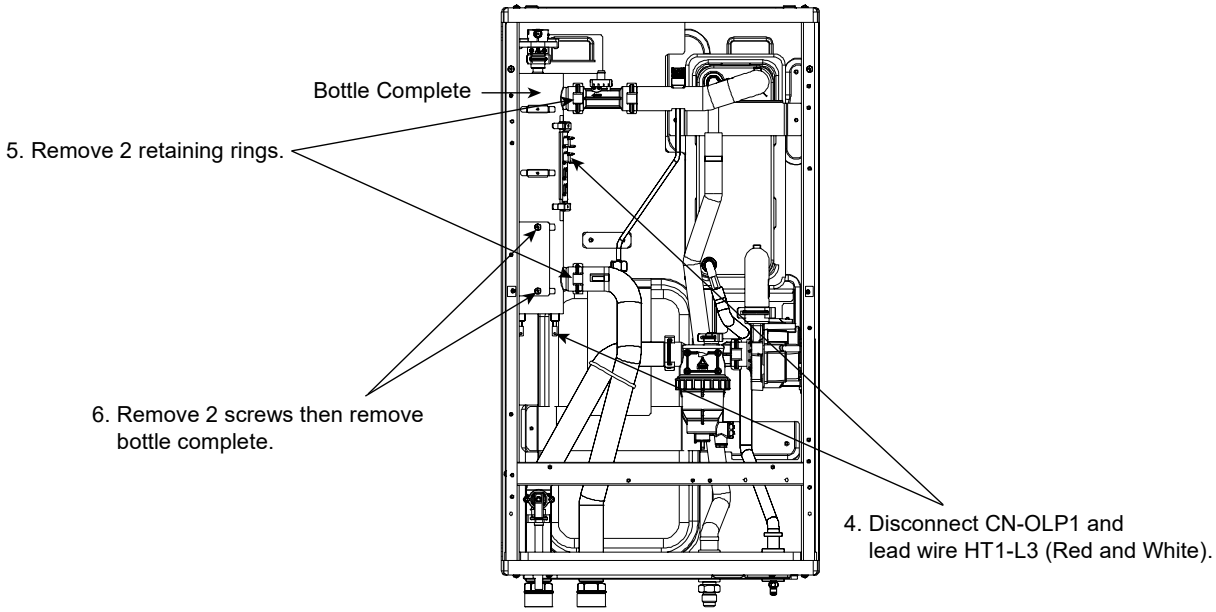

19.9 To Remove Water Filter

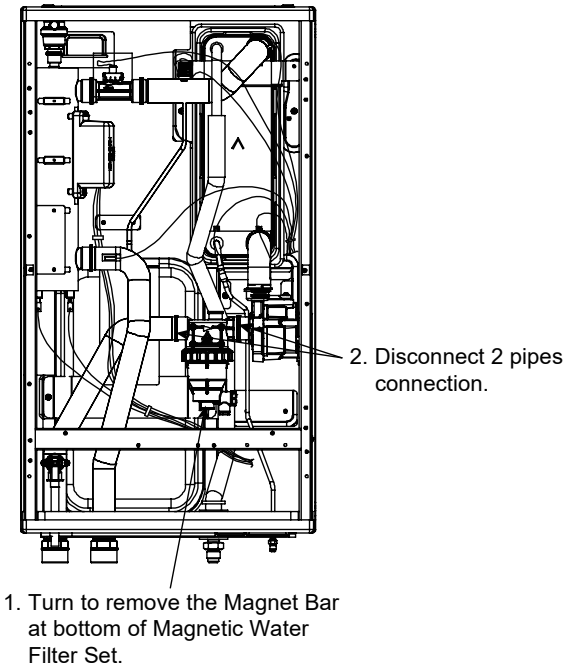

20. Technical Data

20.1 Operation Characteristics

20.1.1 WH-UXZ09KE5

Heating Characteristics at Different Outdoor Air Temperature

Condition
Outdoor air temperature : 7°C (DBT), 6°C (WBT)
Indoor water inlet temperature : 30°C
Indoor water outlet temperature : 35°C
Piping length : 7 m

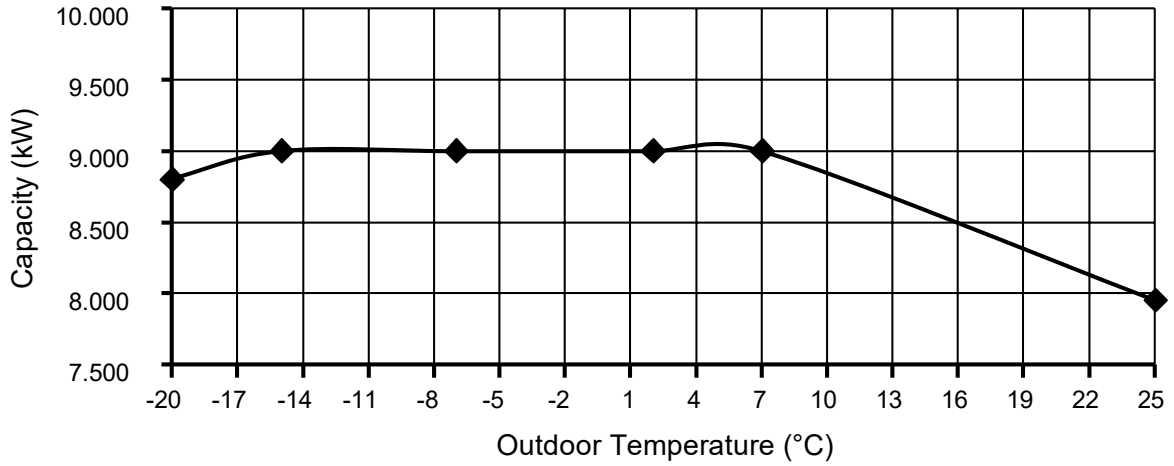

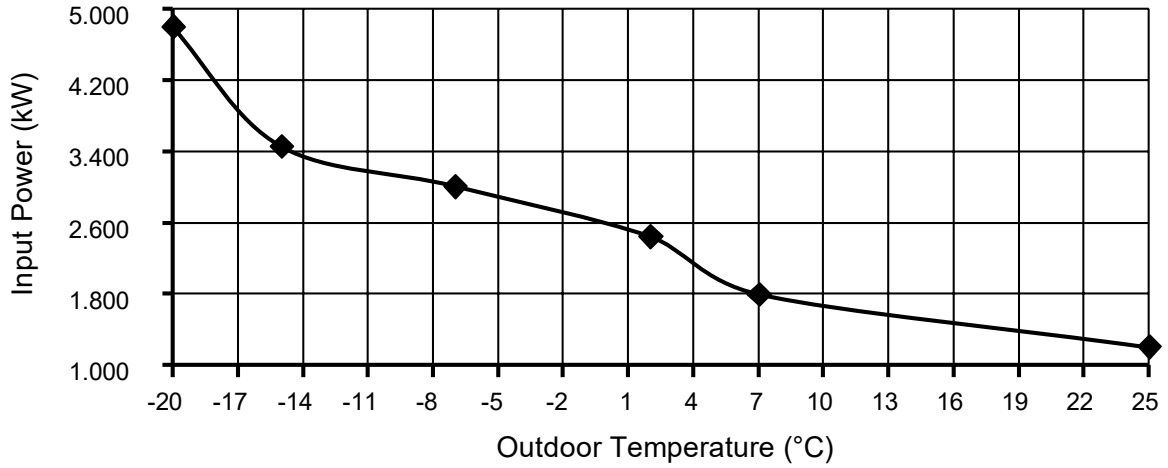

Cooling Characteristics at Different Outdoor Air Temperature

Condition
Outdoor air temperature : 35°C (DBT), -°C (WBT)
Indoor water inlet temperature : 12°C
Indoor water outlet temperature : 7°C
Piping length : 7 m

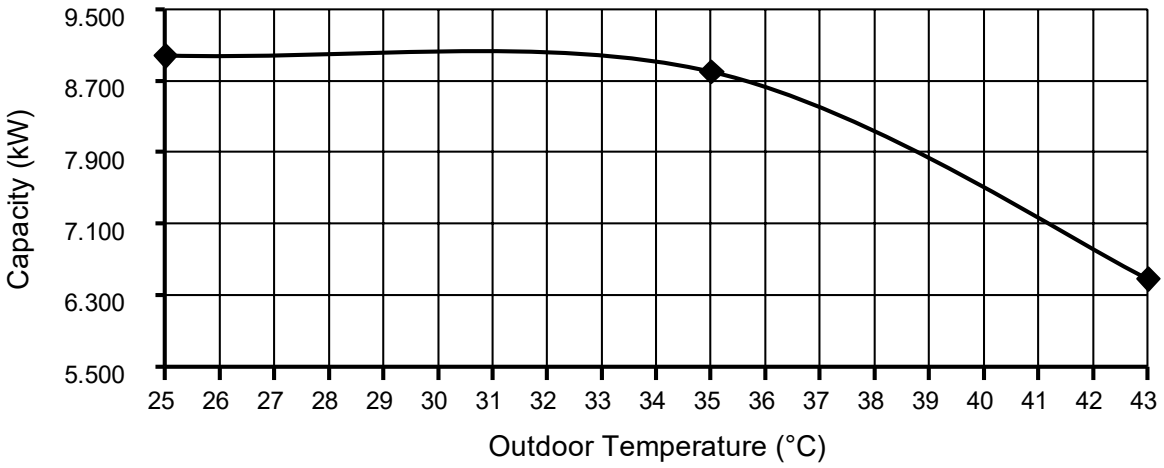

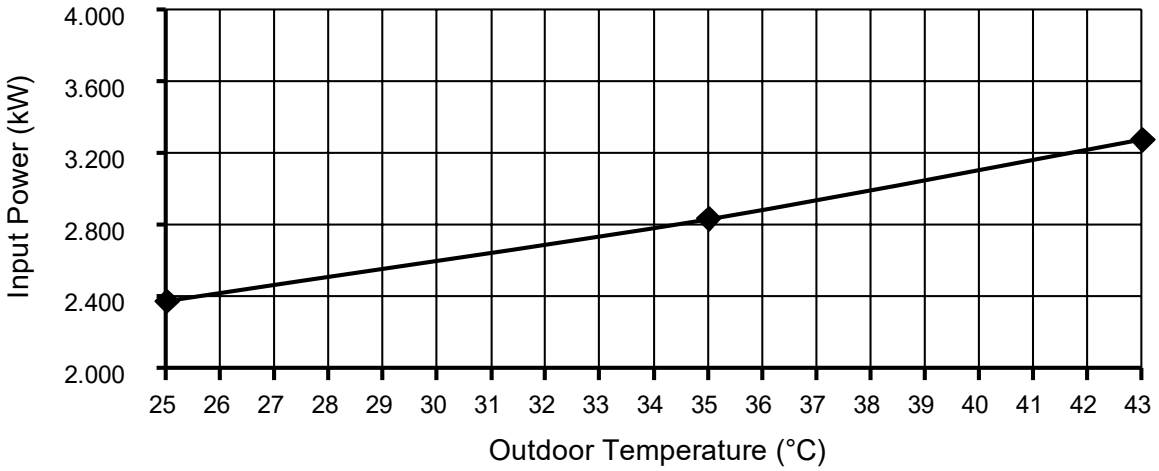

Cooling Characteristics at Different Outdoor Air Temperature

Condition
Outdoor air temperature : 35°C (DBT), -°C (WBT)
Indoor water inlet temperature : 19°C
Indoor water outlet temperature : 14°C
Piping length : 7 m

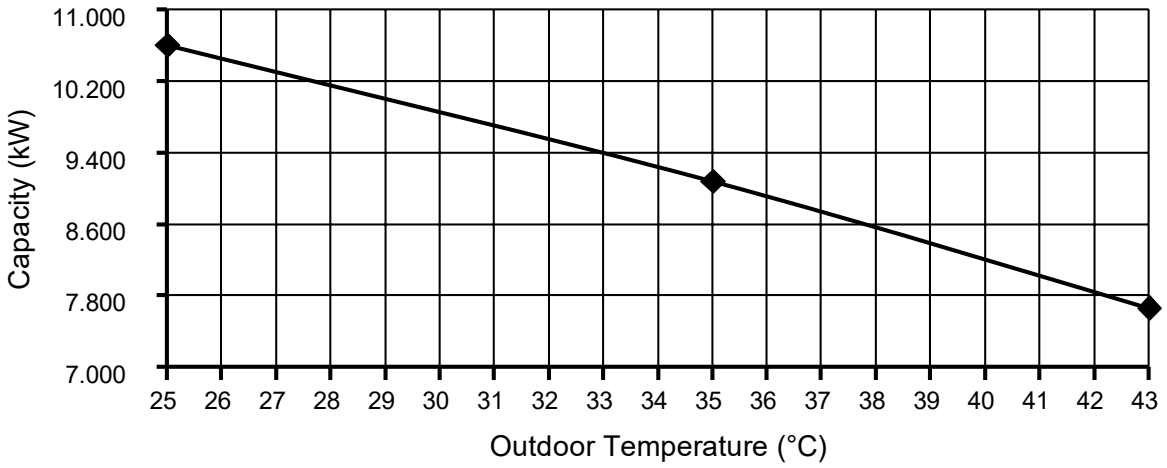

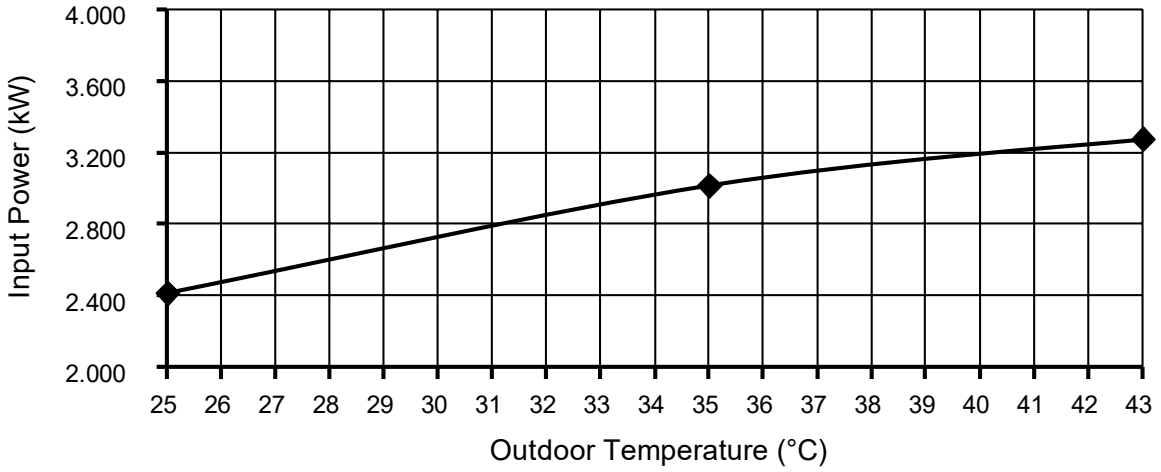

Cooling Characteristics at Different Outdoor Air Temperature

Condition
Outdoor air temperature : 35°C (DBT), -°C (WBT)
Indoor water inlet temperature : 23°C
Indoor water outlet temperature : 18°C
Piping length : 7 m

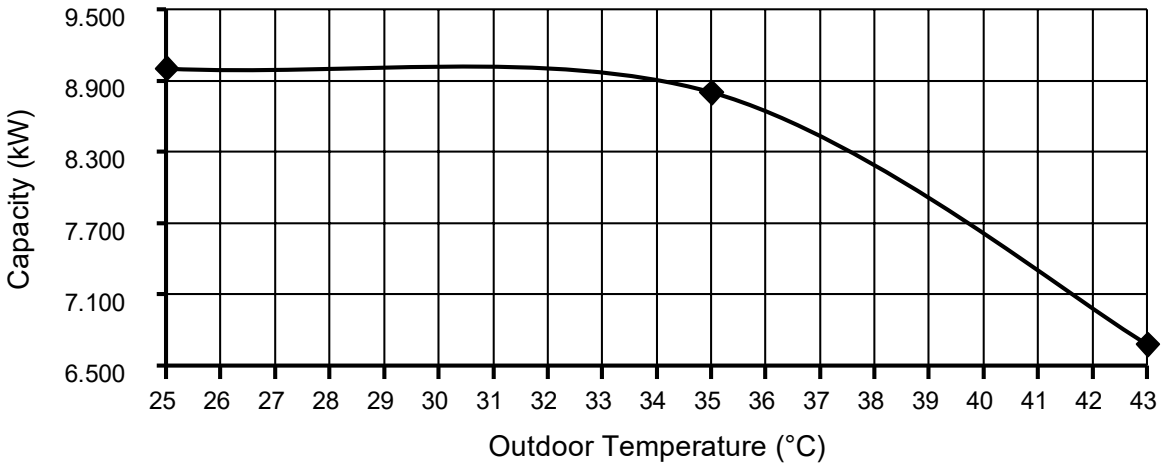

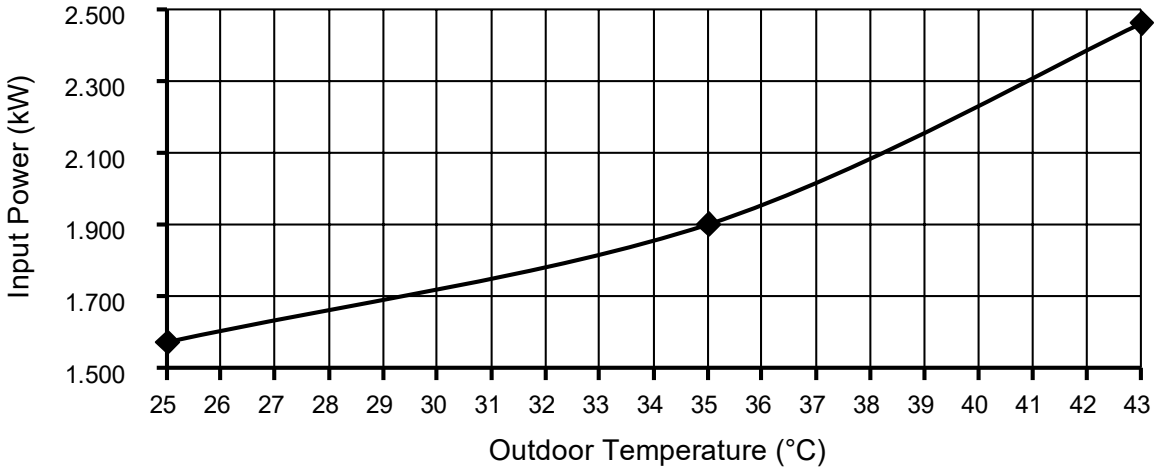

Heating Characteristics at Different Piping Length

Condition
Outdoor air temperature : 7°C (DBT), 6°C (WBT)
Indoor water inlet temperature : 30°C
Indoor water outlet temperature : 35°C
Piping length : 20 m / 30 m

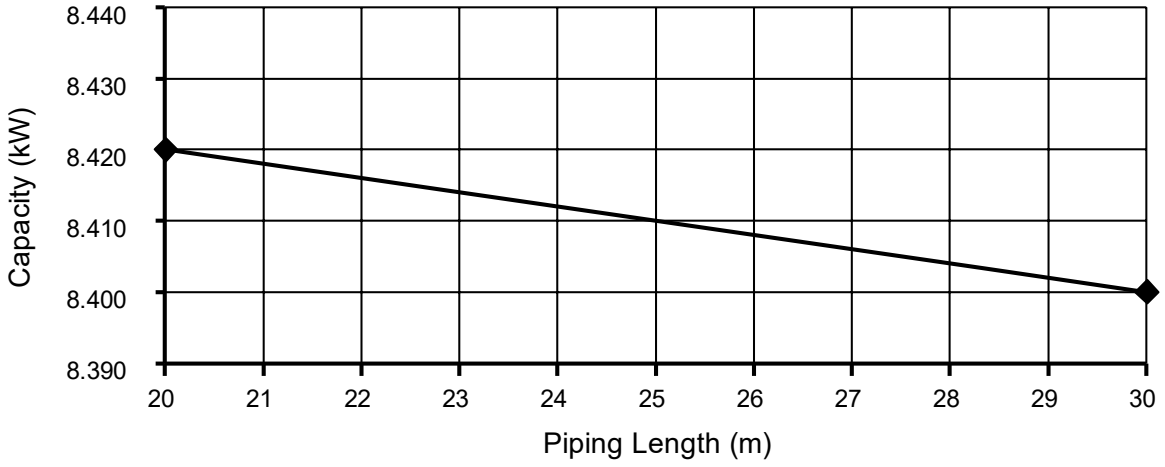

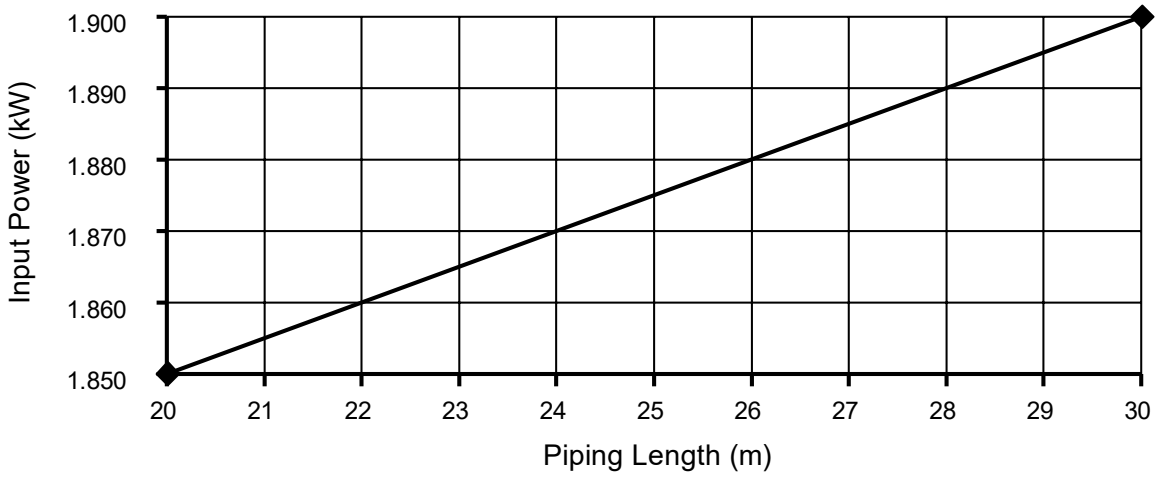

Cooling Characteristics at Different Piping Length

Condition
Outdoor air temperature : 35°C (DBT), -°C (WBT)
Indoor water inlet temperature : 12°C
Indoor water outlet temperature : 7°C
Piping length : 20 m / 30 m

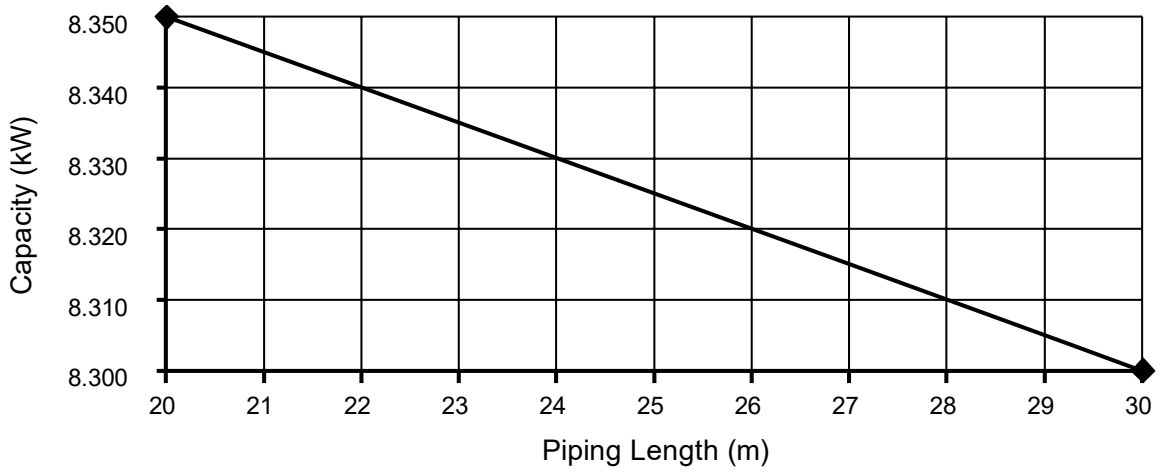

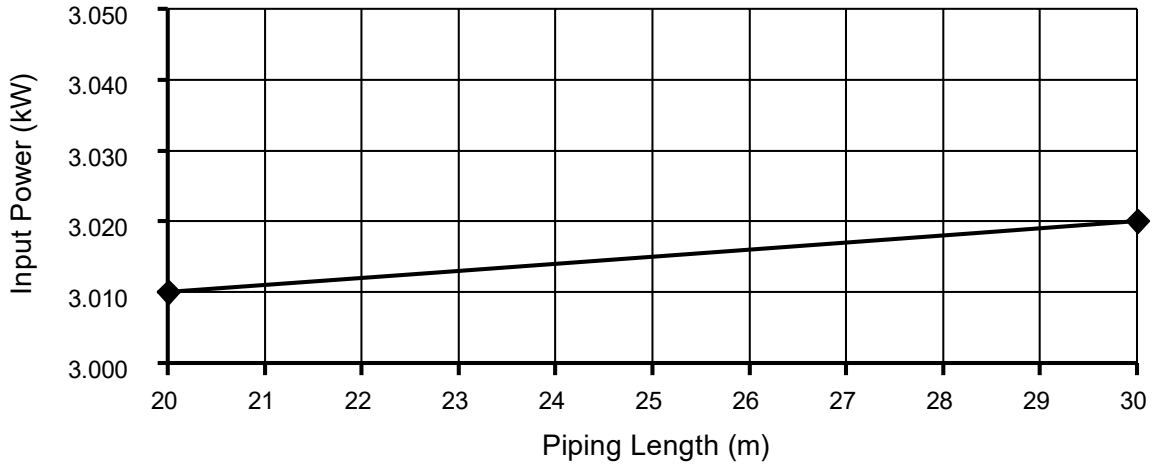

20.1.2 WH-UXZ12KE5

Heating Characteristics at Different Outdoor Air Temperature

Condition
Outdoor air temperature : 7°C (DBT), 6°C (WBT)
Indoor water inlet temperature : 30°C
Indoor water outlet temperature : 35°C
Piping length : 7 m

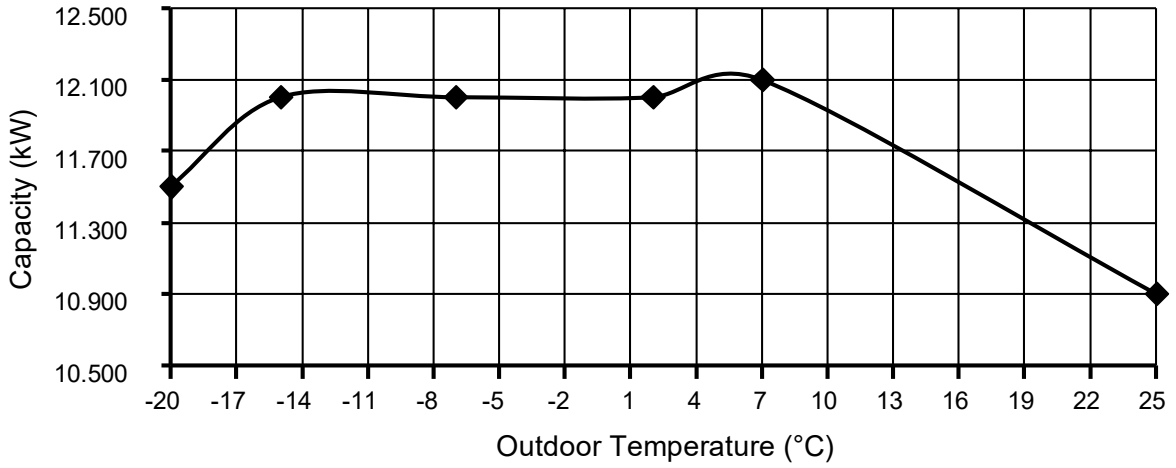

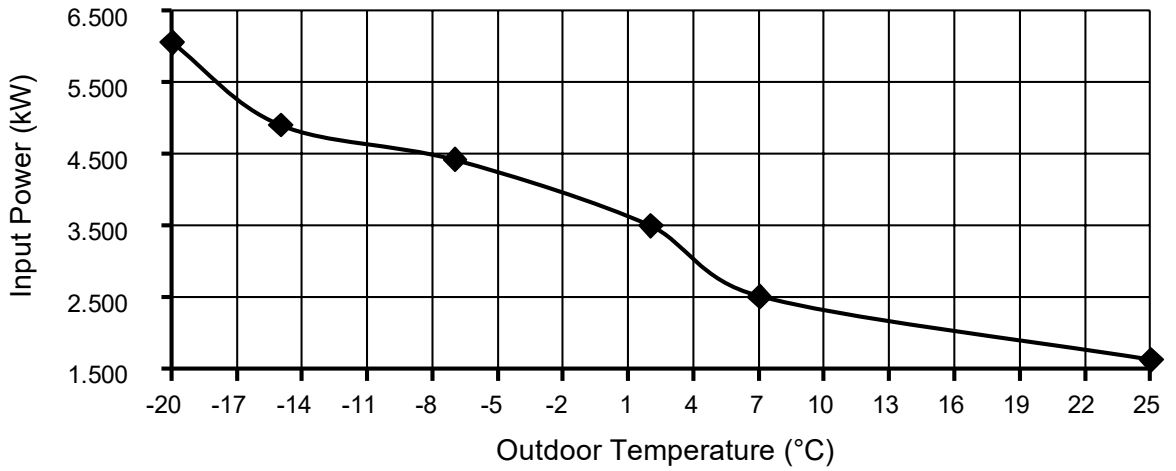

Cooling Characteristics at Different Outdoor Air Temperature

Condition
Outdoor air temperature : 35°C (DBT), -°C (WBT)
Indoor water inlet temperature : 12°C
Indoor water outlet temperature : 7°C
Piping length : 7 m

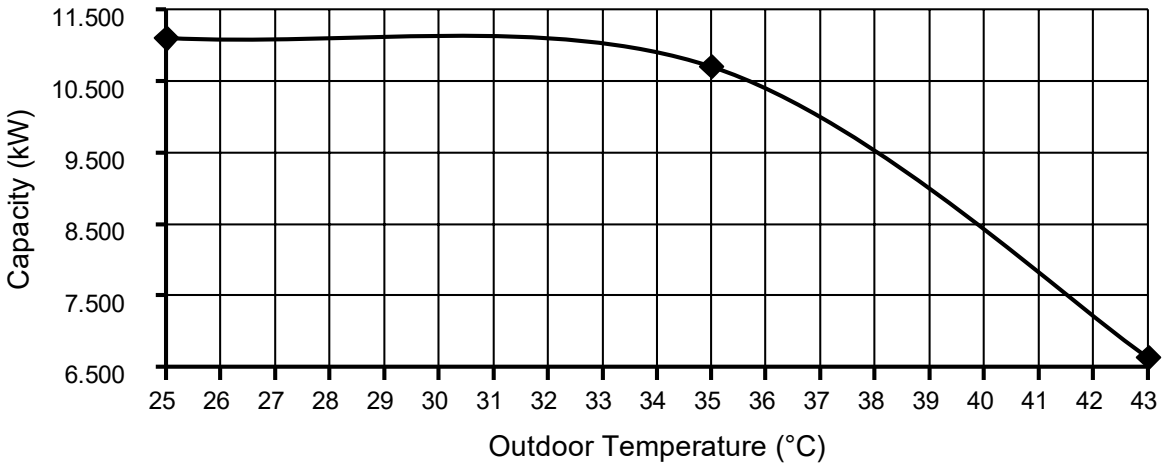

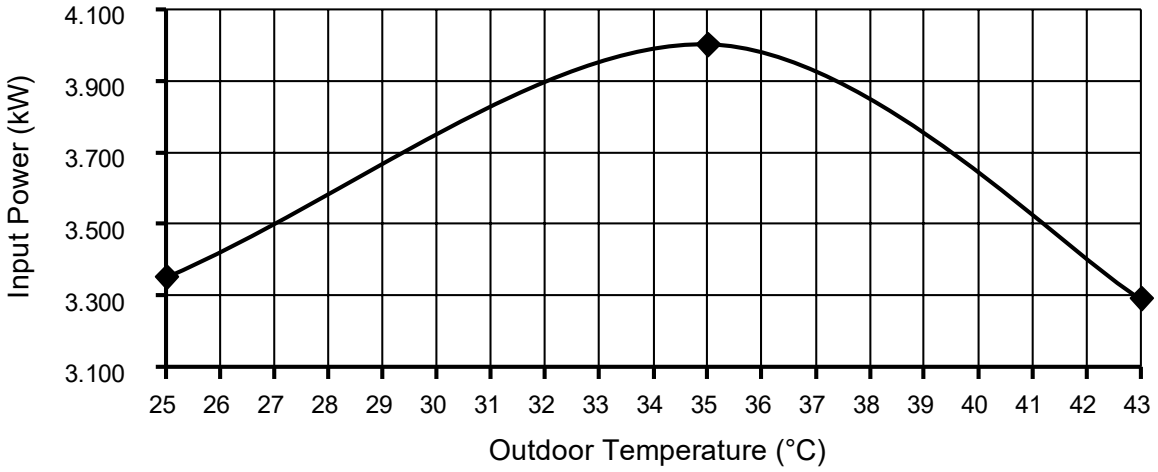

Cooling Characteristics at Different Outdoor Air Temperature

Condition
Outdoor air temperature : 35°C (DBT), -°C (WBT)
Indoor water inlet temperature : 19°C
Indoor water outlet temperature : 14°C
Piping length : 7 m

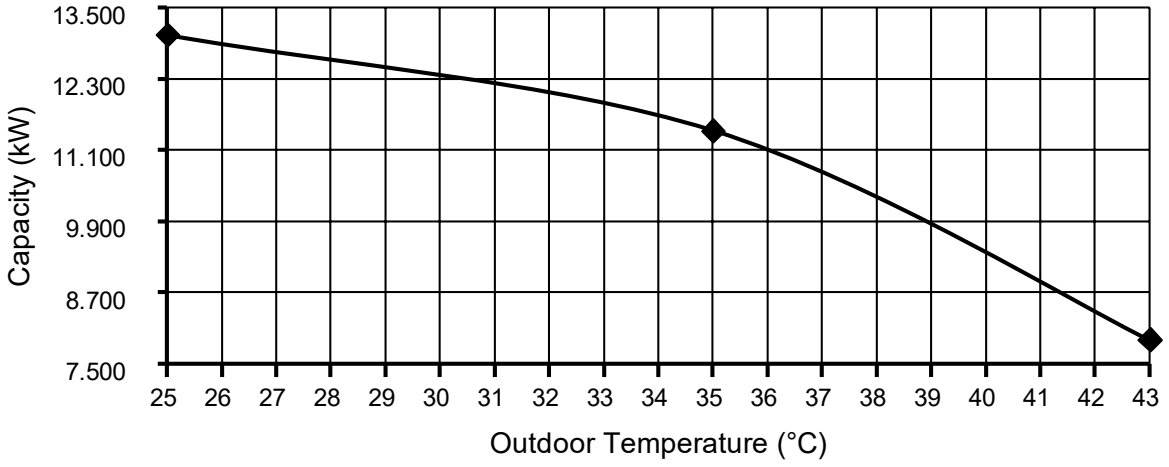

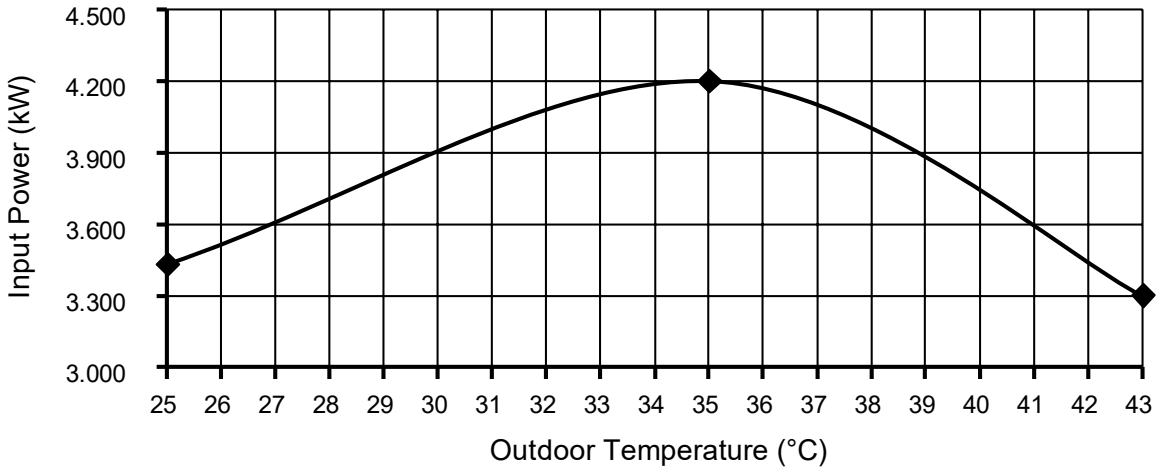

Cooling Characteristics at Different Outdoor Air Temperature

Condition
Outdoor air temperature : 35°C (DBT), -°C (WBT)
Indoor water inlet temperature : 23°C
Indoor water outlet temperature : 18°C
Piping length : 7 m

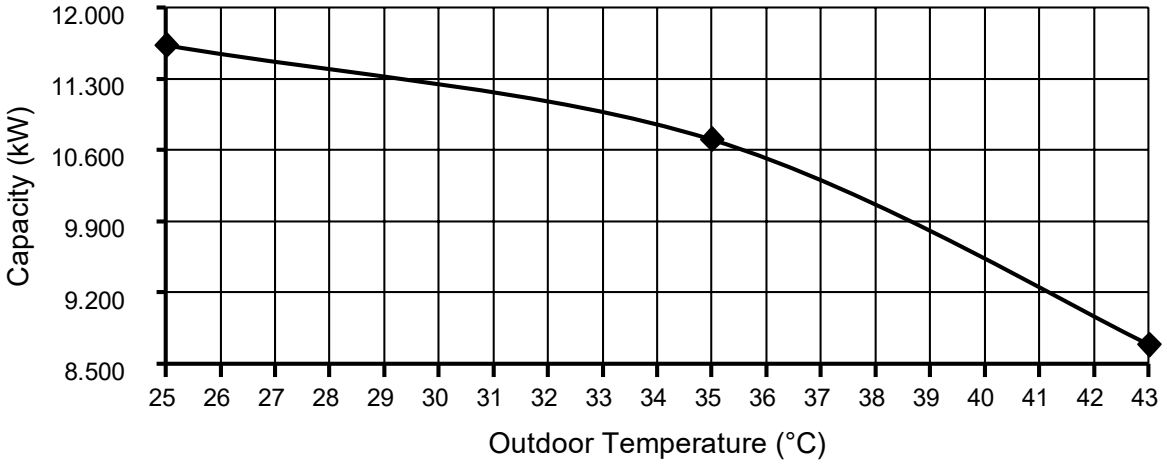

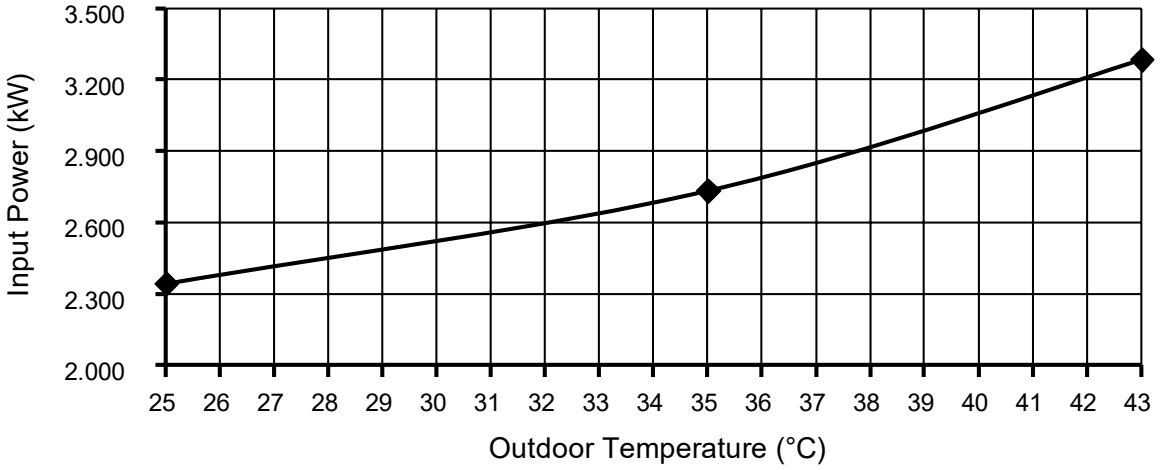

Heating Characteristics at Different Piping Length

Condition
Outdoor air temperature : 7°C (DBT), 6°C (WBT)
Indoor water inlet temperature : 30°C
Indoor water outlet temperature : 35°C
Piping length : 20 m / 30 m

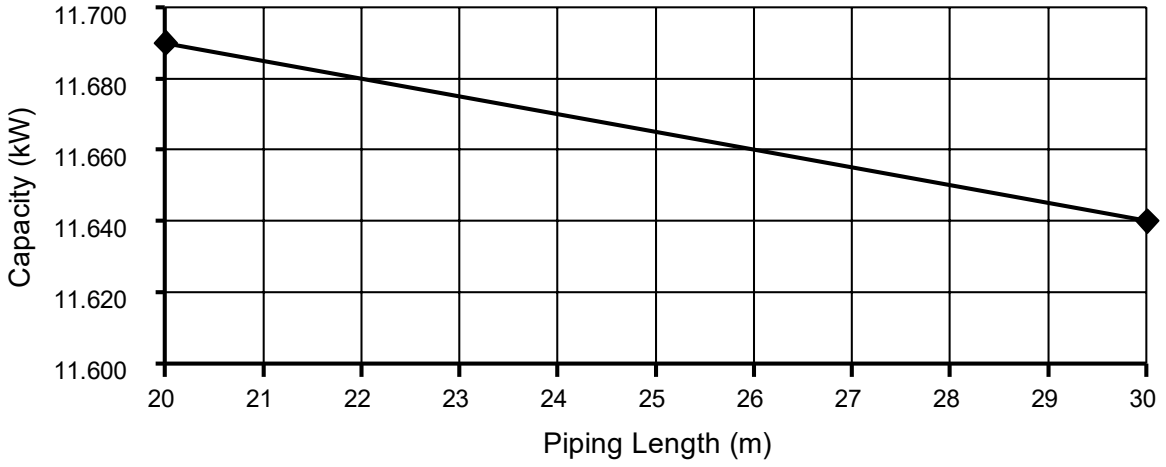

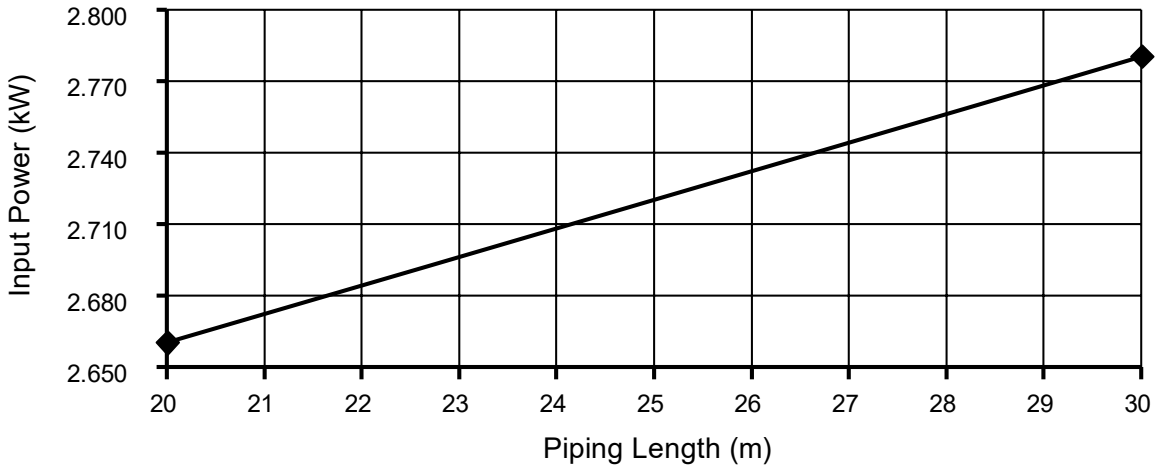

Cooling Characteristics at Different Piping Length

Condition
Outdoor air temperature : 35°C (DBT), -°C (WBT)
Indoor water inlet temperature : 12°C
Indoor water outlet temperature : 7°C
Piping length : 20 m / 30 m

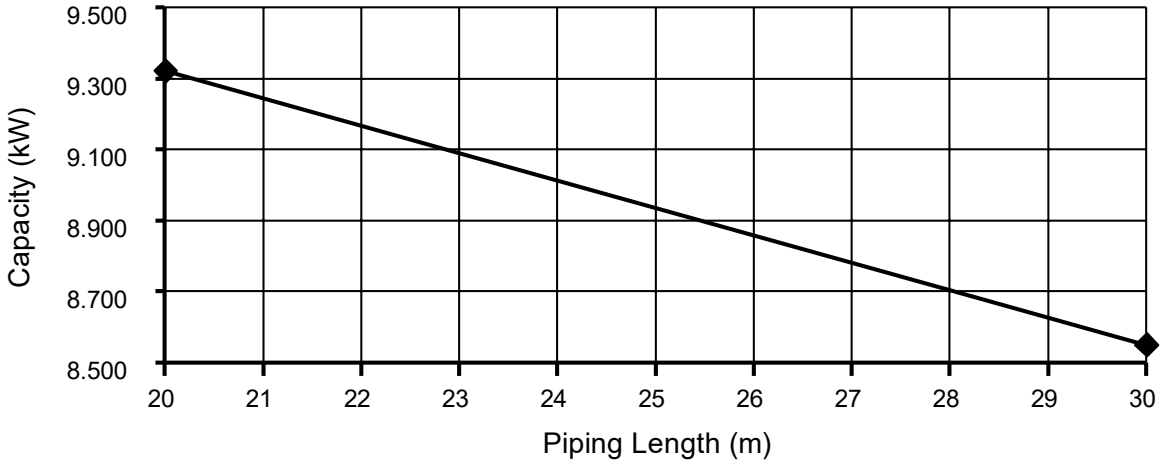

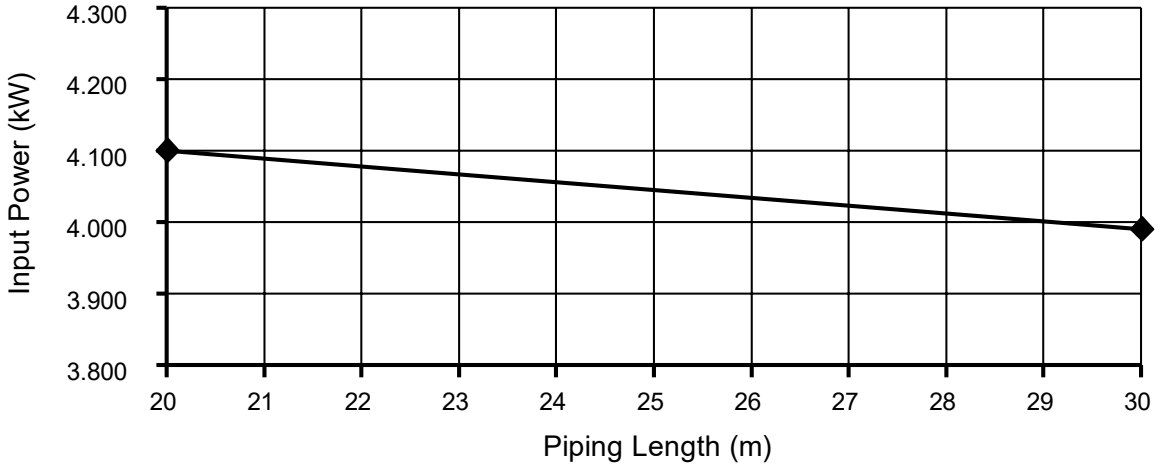

20.2 Heating Capacity Table

20.2.1 WH-UXZ09KE5

Water Out (°C)	35		45		55		60	
Outdoor Air (°C)	Capacity (W)	Input Power (W)	Capacity (W)	Input Power (W)	Capacity (W)	Input Power (W)	Capacity (W)	Input Power (W)
-20	8800	4790	8800	5300	8550	5900	-	-
-15	9000	3450	9000	4300	9000	4950	8800	6370
-7	9000	3000	9000	3820	9000	4280	9000	4720
2	9000	2440	9000	3050	9000	3900	9000	4050
7	9000	1790	9000	2420	9000	2930	9000	3430
25	7950	1200	9000	1560	11300	3130	11000	2860

20.2.2 WH-UXZ12KE5

Water Out (°C)	35		45		55		60	
Outdoor Air (°C)	Capacity (W)	Input Power (W)	Capacity (W)	Input Power (W)	Capacity (W)	Input Power (W)	Capacity (W)	Input Power (W)
-20	11500	6050	10200	6020	8700	6000	-	-
-15	12000	4900	11000	5380	10500	6200	-	-
-7	12000	4410	12000	5540	12000	5240	11800	6590
2	12000	3490	12000	4250	12000	5240	12000	5770
7	12100	2500	12100	3380	12100	3980	12000	4520
25	10900	1610	10870	2440	11300	3130	12000	3110

20.3 Cooling Capacity Table

20.3.1 WH-UXZ09KE5

Water Out (°C)	7		14		18	
Outdoor Air (°C)	Capacity (W)	Input Power (W)	Capacity (W)	Input Power (W)	Capacity (W)	Input Power (W)
25	8980	2370	10600	2410	9000	1570
35	8800	2830	9070	3010	8800	1900
43	6480	3270	7650	3270	6680	2460

20.3.2 WH-UXZ12KE5

Water Out (°C)	7		14		18	
Outdoor Air (°C)	Capacity (W)	Input Power (W)	Capacity (W)	Input Power (W)	Capacity (W)	Input Power (W)
25	11100	3350	13030	3430	11630	2340
35	10700	4000	11420	4200	10700	2730
43	6620	3290	7890	3300	8680	3280

21. Exploded View and Replacement Parts List

21.1 Indoor Unit

21.1.1 WH-SXC09K3E5

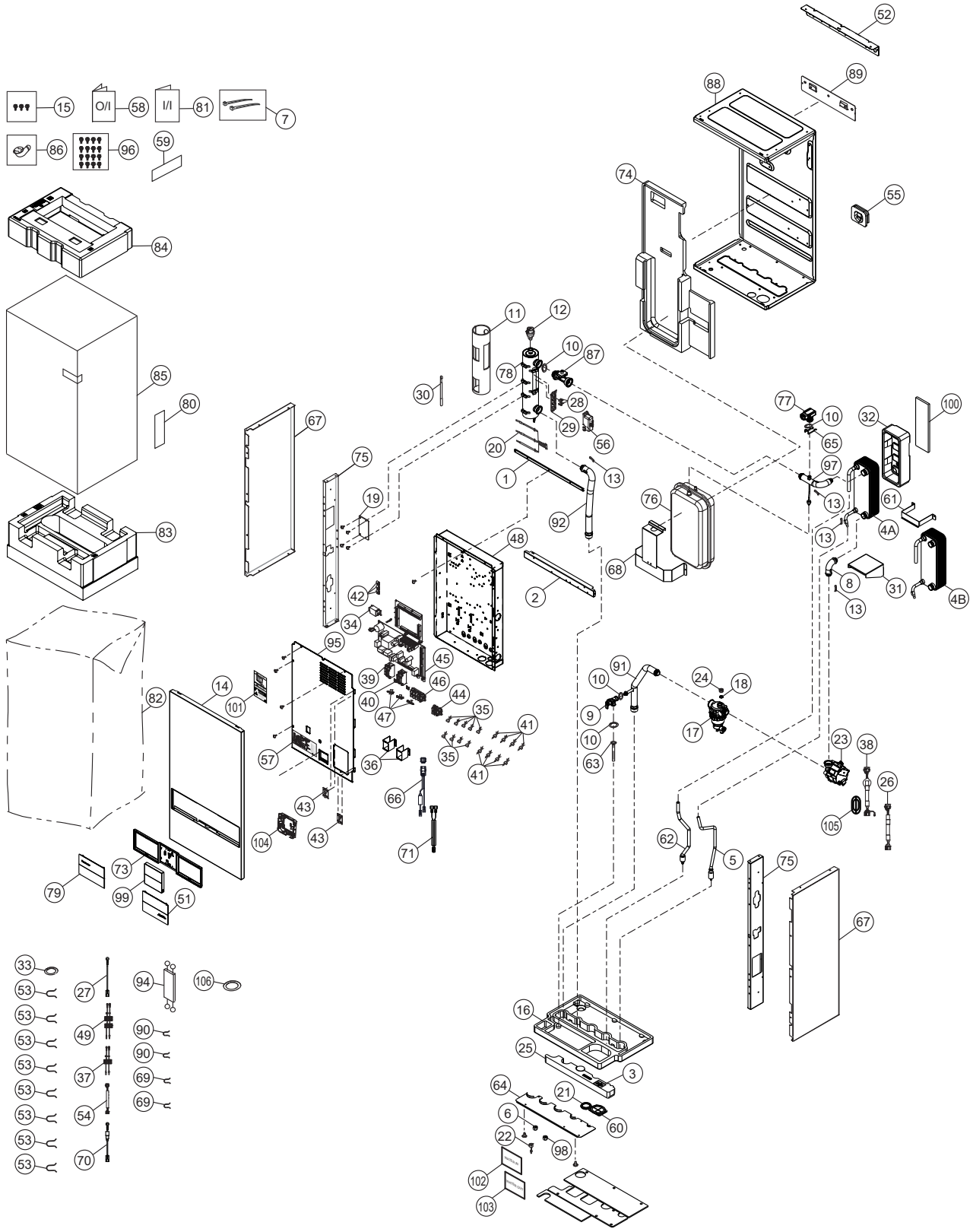

Note:
The above exploded view is for the purpose of parts disassembly and replacement.
The non-numbered parts are not kept as standard service parts.

SAFETY	REF. NO.	DESCRIPTION & NAME	QTY.	WH-SXC09K3E5	REMARK
	1	PARTICULAR PLATE	1	D912684	
	2	PARTICULAR PLATE	1	D912685	
	3	FOAMED POLYSTYRENE	1	G071730	
	4A	HOT WATER COIL - COMPLETE (SWAP)	1	ACXB90C02030	
	4B	HOT WATER COIL - COMPLETE (ALFA LAVAL)	1	ACXB90C02040	
	5	TUBE ASSY - COMPLETE	1	ACXT00C44890	
	6	FLARE NUT	1	T251063	
	7	HOSE BAND	2	4090023	
	8	TUBE ASSY - COMPLETE	1	ACXT00C44940	
	9	PRESSURE RELIEF VALVE	1	ACXB62-00740	O
	10	PACKING	3	ACXB81-06820	
	11	SOUND PROOF MATERIAL	1	ACXG30-10230	
	12	AIR PURGE VALVE	1	ACXB62-00130	O
	13	PLATE SPRING	4	H711019	
	14	CABINET FRONT PLATE	1	ACXE06-05290A	
	15	ACCESSORY - COMPLETE (SCREWS)	1	ACXH82C03490	
	16	FOAMED POLYSTYRENE	1	G071795	
	17	FILTER COMPLETE	1	ACXB51C00110	O
	18	PACKING	1	ACXB81-06810	
	19	Z-SHAPED PLATE	1	D631059	
⚠	20	SENSOR - COMPLETE	1	ACXA50C15270	O
	21	PACKING	1	ACXB81-00030	
	22	FLARE NUT	1	T251032	
⚠	23	WATER PUMP	1	ACXB53-00850	O
	24	PLUG	1	ACXB82-00840	
	25	FOAMED POLYSTYRENE	1	ACXG07-07900	
⚠	26	LEAD WIRE - COMPLETE	1	ACXA60C93661	O
⚠	27	LEAD WIRE - COMPLETE	1	ACXA60C96930	O
⚠	28	THERMOSTAT	2	A151074	O
	29	U-SHAPED PIECE	1	D721031	
⚠	30	SENSOR - COMPLETE	1	ACXA50C15280	O
	31	BOX SHAPED PLATE	1	D661189	
	32	FOAMED POLYSTYRENE	1	G071691	
	33	PACKING	1	B811179	
⚠	34	REACTOR	1	G0C103Z00003	O
	35	SPACER	9	H54295	
	36	U-SHAPED PIECE	2	D721014	
⚠	37	LEAD WIRE - COMPLETE	1	ACXA60C96940	O
⚠	38	LEAD WIRE - COMPLETE	1	ACXA60C77950	O
⚠	39	CIRCUIT BREAKER	1	ACXA18-00010	O
⚠	40	CIRCUIT BREAKER	1	K5KYYAY00003	O
	41	SPACER	8	H54294	

SAFETY	REF. NO.	DESCRIPTION & NAME	QTY.	WH-SXC09K3E5	REMARK
	42	A-PIECE	3	D77001	
	43	HINGE	2	H611006	
⚠	44	TERMINAL BOARD ASSY (A,B)	1	A28K1238	O
⚠	45	ELECTRONIC CONTROLLER	1	ACXA73C96430	O
⚠	46	TERMINAL BOARD ASSY (1,2,3)	1	A28K1217	O
	47	HOLDER - P.S. CORD	3	H31103	
	48	CONTROL BOARD ASSY	1	ACXH10-10010	
⚠	49	LEAD WIRE - COMPLETE	1	ACXA60C98600	O
	51	DECORATION BASE ASSY (AQUAREA)	1	ACXE35K03640	
	52	INSTALLING HOLDER B	1	H361119	
	53	RETAINING RING (25.4)	8	ACXH58-00370	
⚠	54	LEAD WIRE - COMPLETE	1	ACXA60C82910	O
	55	PACKING	1	B811177	
	56	TERMINAL COVER	1	H171051	
	57	WIRING DIAGRAM	1	ACXF29-00850	
	58	OPERATING INSTRUCTION - COMPLETE	1	ACXF55C28010	
	59	MODEL LABEL	1	ACXF87-09040	
	60	PACKING	1	ACXB81-00040	
	61	CONVEX PLATE	1	ACXD65-00040	
	62	TUBE ASSY - COMPLETE	1	ACXT00C45740	
	63	TUBE ASSY	1	T030522	
	64	FLAT PLATE	1	ACXD64-01680	
	65	WIRE SPRING	1	ACXH72-00341	
⚠	66	LEAD WIRE - COMPLETE	1	ACXA60C96900	O
	67	CABINET SIDE PLATE	2	ACXE04-13580A	
	68	PARTICULAR PLATE - ASSY	1	ACXD90K02450	
	69	RETAINING RING (12.7)	2	H581007	
⚠	70	LEAD WIRE - COMPLETE	1	ACXA60C96910	O
⚠	71	LEAD WIRE - COMPLETE	1	ACXA60C96920	O
	73	BOX SHAPED PLATE	1	ACXD66-03970	
	74	FOAMED POLYSTYRENE	1	ACXG07-06070	
	75	CONNECTING BAR	2	E261330	
	76	RECEIVER	1	ACXB14-00720	
⚠	77	PRESSURE SENSOR	1	ACXB62-01110	O
	78	HEATER ASSY	1	ACXA34K00070	
	79	DECORATION BASE ASSY (PANASONIC)	1	ACXE35K03630	
	80	NAME PLATE	1	ACXF09-09020	
	81	INSTALLATION INSTRUCTION COMPLETE	1	ACXF60C20060	
	82	BAG (UNIT)	1	ACXG86-04152	
	83	BASE BOARD - COMPLETE	1	ACXG62C02920	
	84	SHOCK ABSORBER	1	ACXG70-15470	
	85	C.C. CASE	1	ACXG50-47955	

SAFETY	REF. NO.	DESCRIPTION & NAME	QTY.	WH-SXC09K3E5	REMARK
	86	BAG - COMPLETE (FLEXIBLE PIPE)	1	G87C900	
⚠	87	FLOW SWITCH	1	ACXB62-00931	O
	88	BASE PAN COMPLETE	1	D521450CZ	
	89	INSTALLING HOLDER	1	H361103CZ	
	90	RETAINING RING (14-23)	2	H581038	
	91	TUBE ASSY - COMPLETE	1	ACXT00C44980	
	92	TUBE ASSY - COMPLETE	1	ACXT00C45000	
⚠	94	LEAD WIRE - COMPLETE	1	ACXA60C96950	O
	95	CONTROL BOARD COVER	1	ACXH13-09380	
	96	SCREW - COMPLETE	16	H551198	
	97	TUBE ASSY - COMPLETE	1	ACXT00C45040	
	98	FLARE NUT	1	T251079	
⚠	99	REMOTE CONTROL SWITCH - COMPLETE	1	ACXA75C23211	O
	100	RUBBER (DECO)	1	ACXB81-07400	
	101	CAUTION LABEL	1	ACXF75-15160	
	102	WATER IN	1	ACXF71-22770	
	103	WATER OUT	1	ACXF71-22780	
	104	BOX SHAPED PLATE	1	ACXD66-03961	
⚠	105	V-COIL	1	A431122	O
	106	PACKING	1	ACXB81-06910	

Note:

- All parts are supplied from PAPAMY, Malaysia (Vendor Code: 00029488).
- “O” marked parts are recommended to be kept in stock.

21.1.2 WH-SXC09K6E5 WH-SXC12K6E5

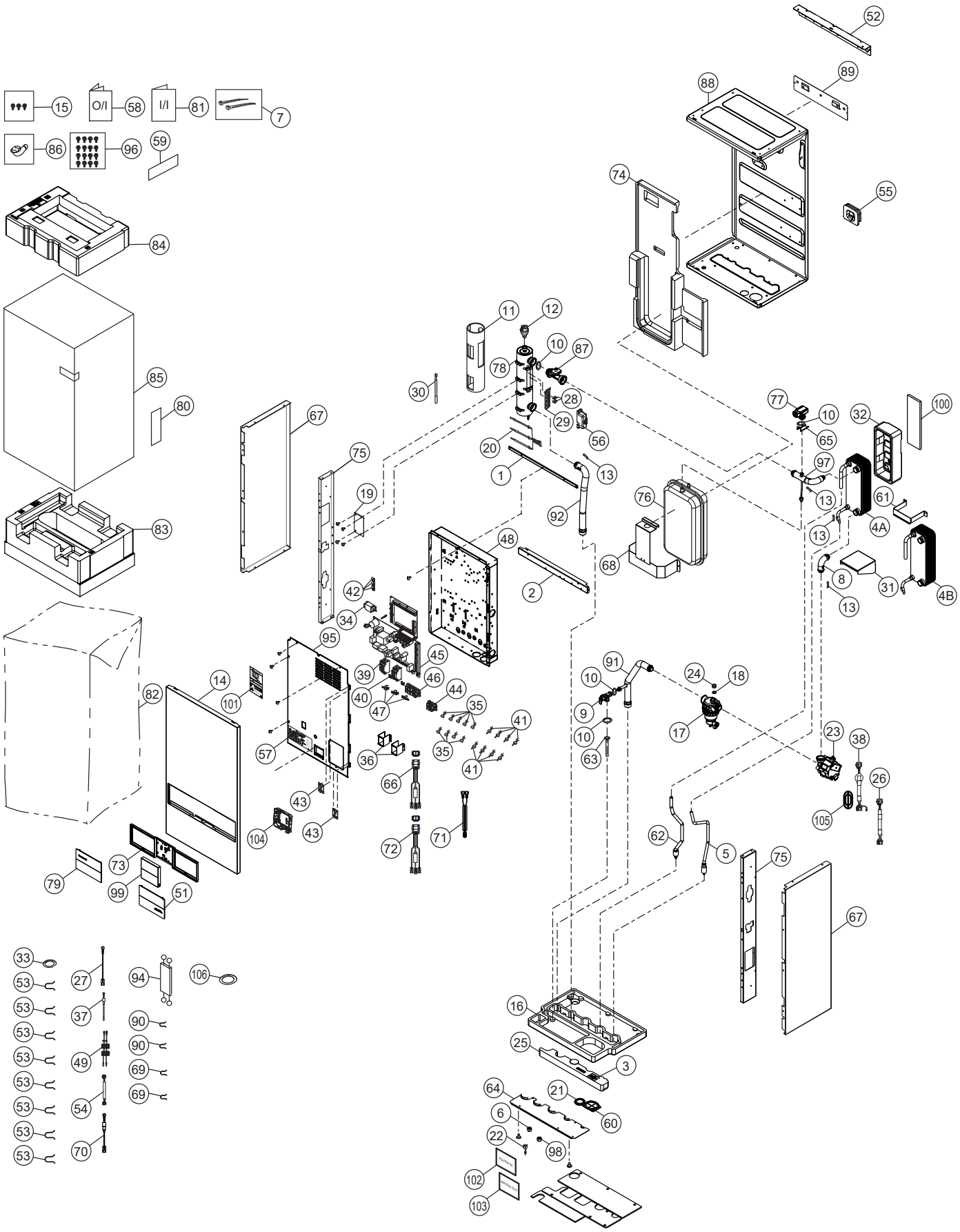

Note:
The above exploded view is for the purpose of parts disassembly and replacement.
The non-numbered parts are not kept as standard service parts.

SAFETY	REF. NO.	DESCRIPTION & NAME	QTY.	WH-SXC09K6E5	WH-SXC12K6E5	REMARK
	1	PARTICULAR PLATE	1	D912684	←	
	2	PARTICULAR PLATE	1	D912685	←	
	3	FOAMED POLYSTYRENE	1	G071730	←	
	4A	HOT WATER COIL - COMPLETE (SWAP)	1	ACXB90C02030	←	
	4B	HOT WATER COIL - COMPLETE (ALFA LAVAL)	1	ACXB90C02040	←	
	5	TUBE ASSY - COMPLETE	1	ACXT00C44890	←	
	6	FLARE NUT	1	T251063	←	
	7	HOSE BAND	2	4090023	←	
	8	TUBE ASSY - COMPLETE	1	ACXT00C44940	←	
	9	PRESSURE RELIEF VALVE	1	ACXB62-00740	←	O
	10	PACKING	3	ACXB81-06820	←	
	11	SOUND PROOF MATERIAL	1	ACXG30-10230	←	
	12	AIR PURGE VALVE	1	ACXB62-00130	←	O
	13	PLATE SPRING	4	H711019	←	
	14	CABINET FRONT PLATE	1	ACXE06-05290A	←	
	15	ACCESSORY - COMPLETE (SCREWS)	1	ACXH82C03490	←	
	16	FOAMED POLYSTYRENE	1	G071795	←	
	17	FILTER COMPLETE	1	ACXB51C00110	←	O
	18	PACKING	1	ACXB81-06810	←	
	19	Z-SHAPED PLATE	1	D631059	←	
⚠	20	SENSOR - COMPLETE	1	ACXA50C15270	←	O
	21	PACKING	1	ACXB81-00030	←	
	22	FLARE NUT	1	T251032	←	
⚠	23	WATER PUMP	1	ACXB53-00850	←	O
	24	PLUG	1	ACXB82-00840	←	
	25	FOAMED POLYSTYRENE	1	ACXG07-07900	←	
⚠	26	LEAD WIRE - COMPLETE	1	ACXA60C93661	←	O
⚠	27	LEAD WIRE - COMPLETE	1	ACXA60C96930	←	O
⚠	28	THERMOSTAT	2	A151074	←	O
	29	U-SHAPED PIECE	1	D721031	←	
⚠	30	SENSOR - COMPLETE	1	ACXA50C15280	←	O
	31	BOX SHAPED PLATE	1	D661189	←	
	32	FOAMED POLYSTYRENE	1	G071691	←	
	33	PACKING	1	B811179	←	
⚠	34	REACTOR	1	G0C103Z00003	←	O
	35	SPACER	9	H54295	←	
	36	U-SHAPED PIECE	2	D721014	←	
⚠	37	LEAD WIRE - COMPLETE	1	A68C1437	←	O
⚠	38	LEAD WIRE - COMPLETE	1	ACXA60C77950	←	O
⚠	39	CIRCUIT BREAKER	1	ACXA18-00010	←	O
⚠	40	CIRCUIT BREAKER	1	K5KYYAY00003	←	O
	41	SPACER	8	H54294	←	

SAFETY	REF. NO.	DESCRIPTION & NAME	QTY.	WH-SXC09K6E5	WH-SXC12K6E5	REMARK
	42	A-PIECE	3	D77001	←	
	43	HINGE	2	H611006	←	
⚠	44	TERMINAL BOARD ASSY (A,B)	1	A28K1238	←	O
⚠	45	ELECTRONIC CONTROLLER	1	ACXA73C96440	ACXA73C96450	O
⚠	46	TERMINAL BOARD ASSY (1,2,3)	1	A28K1217	←	O
	47	HOLDER - P.S. CORD	3	H31103	←	
	48	CONTROL BOARD ASSY	1	ACXH10-10010	←	
⚠	49	LEAD WIRE - COMPLETE	1	ACXA60C98600	←	O
	51	DECORATION BASE ASSY (AQUAREA)	1	ACXE35K03640	←	
	52	INSTALLING HOLDER B	1	H361119	←	
	53	RETAINING RING (25.4)	8	ACXH58-00370	←	
⚠	54	LEAD WIRE - COMPLETE	1	ACXA60C82910	←	O
	55	PACKING	1	B811177	←	
	56	TERMINAL COVER	1	H171051	←	
	57	WIRING DIAGRAM	1	ACXF29-00860	←	
	58	OPERATING INSTRUCTION - COMPLETE	1	ACXF55C28010	←	
	59	MODEL LABEL	1	ACXF87-09050	ACXF87-09060	
	60	PACKING	1	ACXB81-00040	←	
	61	CONVEX PLATE	1	ACXD65-00040	←	
	62	TUBE ASSY - COMPLETE	1	ACXT00C45740	←	
	63	TUBE ASSY	1	T030522	←	
	64	FLAT PLATE	1	ACXD64-01680	←	
	65	WIRE SPRING	1	ACXH72-00341	←	
⚠	66	LEAD WIRE - COMPLETE	1	ACXA60C98590	←	O
	67	CABINET SIDE PLATE	2	ACXE04-13580A	←	
	68	PARTICULAR PLATE - ASSY	1	ACXD90K02450	←	
	69	RETAINING RING (12.7)	2	H581007	←	
⚠	70	LEAD WIRE - COMPLETE	1	ACXA60C96910	←	O
⚠	71	LEAD WIRE - COMPLETE	1	ACXA60C96920	←	O
	72	LEAD WIRE - COMPLETE	1	ACXA60C97520	←	
	73	BOX SHAPED PLATE	1	ACXD66-03970	←	
	74	FOAMED POLYSTYRENE	1	ACXG07-06070	←	
	75	CONNECTING BAR	2	E261330	←	
	76	RECEIVER	1	ACXB14-00720	←	
⚠	77	PRESSURE SENSOR	1	ACXB62-01110	←	O
	78	HEATER ASSY	1	ACXA34K00430	←	
	79	DECORATION BASE ASSY (PANASONIC)	1	ACXE35K03630	←	
	80	NAME PLATE	1	ACXF09-09030	ACXF09-09040	
	81	INSTALLATION INSTRUCTION COMPLETE	1	ACXF60C20060	←	
	82	BAG (UNIT)	1	ACXG86-04152	←	
	83	BASE BOARD - COMPLETE	1	ACXG62C02920	←	
	84	SHOCK ABSORBER	1	ACXG70-15470	←	
	85	C.C. CASE	1	ACXG50-47955	←	
	86	BAG - COMPLETE (FLEXIBLE PIPE)	1	G87C900	←	

SAFETY	REF. NO.	DESCRIPTION & NAME	QTY.	WH-SXC09K6E5	WH-SXC12K6E5	REMARK
⚠	87	FLOW SWITCH	1	ACXB62-00931	←	O
	88	BASE PAN COMPLETE	1	D521450CZ	←	
	89	INSTALLING HOLDER	1	H361103CZ	←	
	90	RETAINING RING (14-23)	2	H581038	←	
	91	TUBE ASSY - COMPLETE	1	ACXT00C44980	←	
	92	TUBE ASSY - COMPLETE	1	ACXT00C45000	←	
⚠	94	LEAD WIRE - COMPLETE	1	ACXA60C96950	←	O
	95	CONTROL BOARD COVER	1	ACXH13-09380	←	
	96	SCREW - COMPLETE	16	H551198	←	
	97	TUBE ASSY - COMPLETE	1	ACXT00C45040	←	
	98	FLARE NUT	1	T251079	←	
⚠	99	REMOTE CONTROL SWITCH - COMPLETE	1	ACXA75C23211	←	O
	100	RUBBER (DECO)	1	ACXB81-07400	←	
	101	CAUTION LABEL	1	ACXF75-15160	←	
	102	WATER IN	1	ACXF71-22770	←	
	103	WATER OUT	1	ACXF71-22780	←	
	104	BOX SHAPED PLATE	1	ACXD66-03961	←	
⚠	105	V-COIL	1	A431122	←	O
	106	PACKING	1	ACXB81-06910	←	

Note:

- All parts are supplied from PAPAMY, Malaysia (Vendor Code: 00029488).
- “O” marked parts are recommended to be kept in stock.

21.2 Outdoor Unit

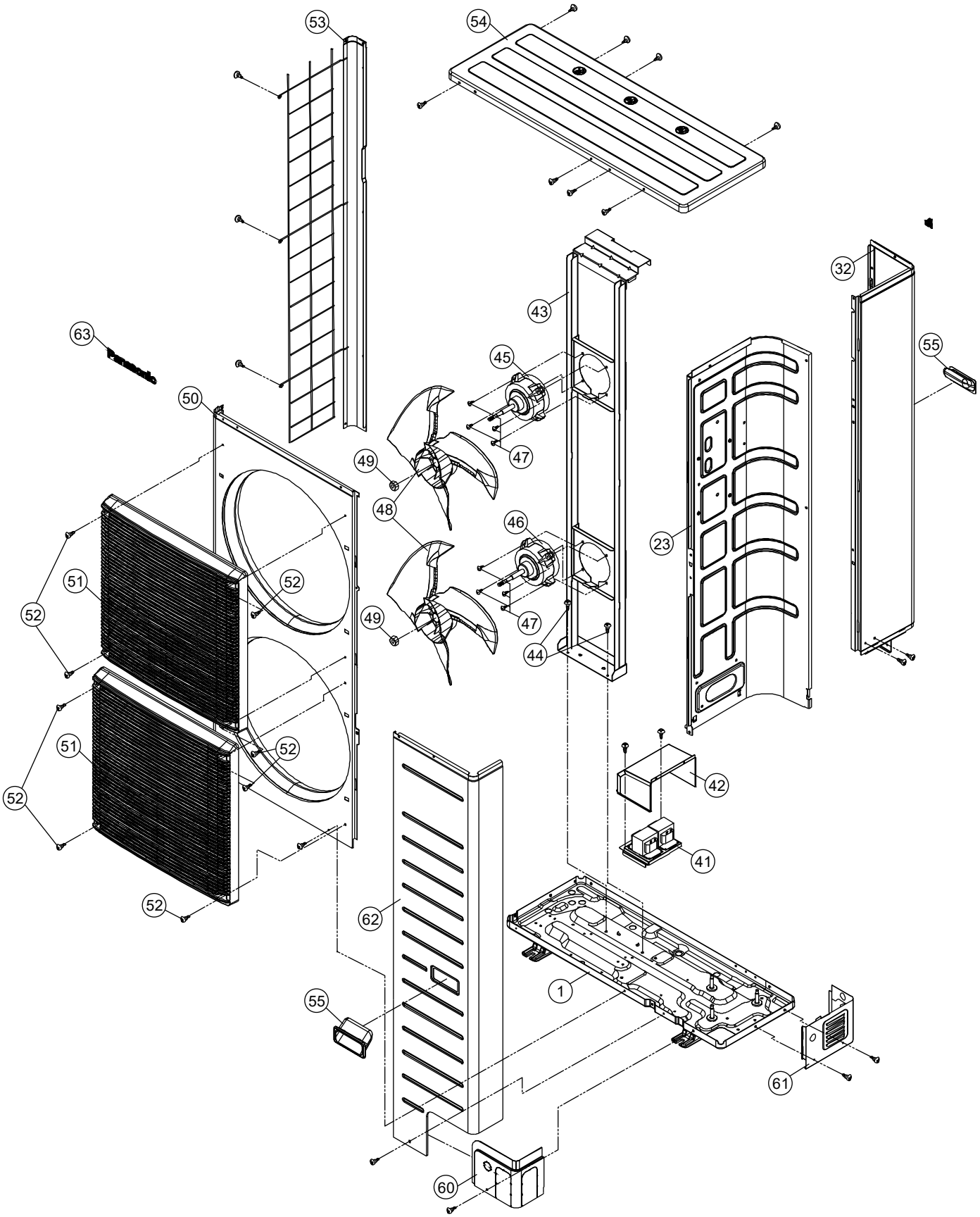

Note:
The above exploded view is for the purpose of parts disassembly and replacement.
The non-numbered parts are not kept as standard service parts.

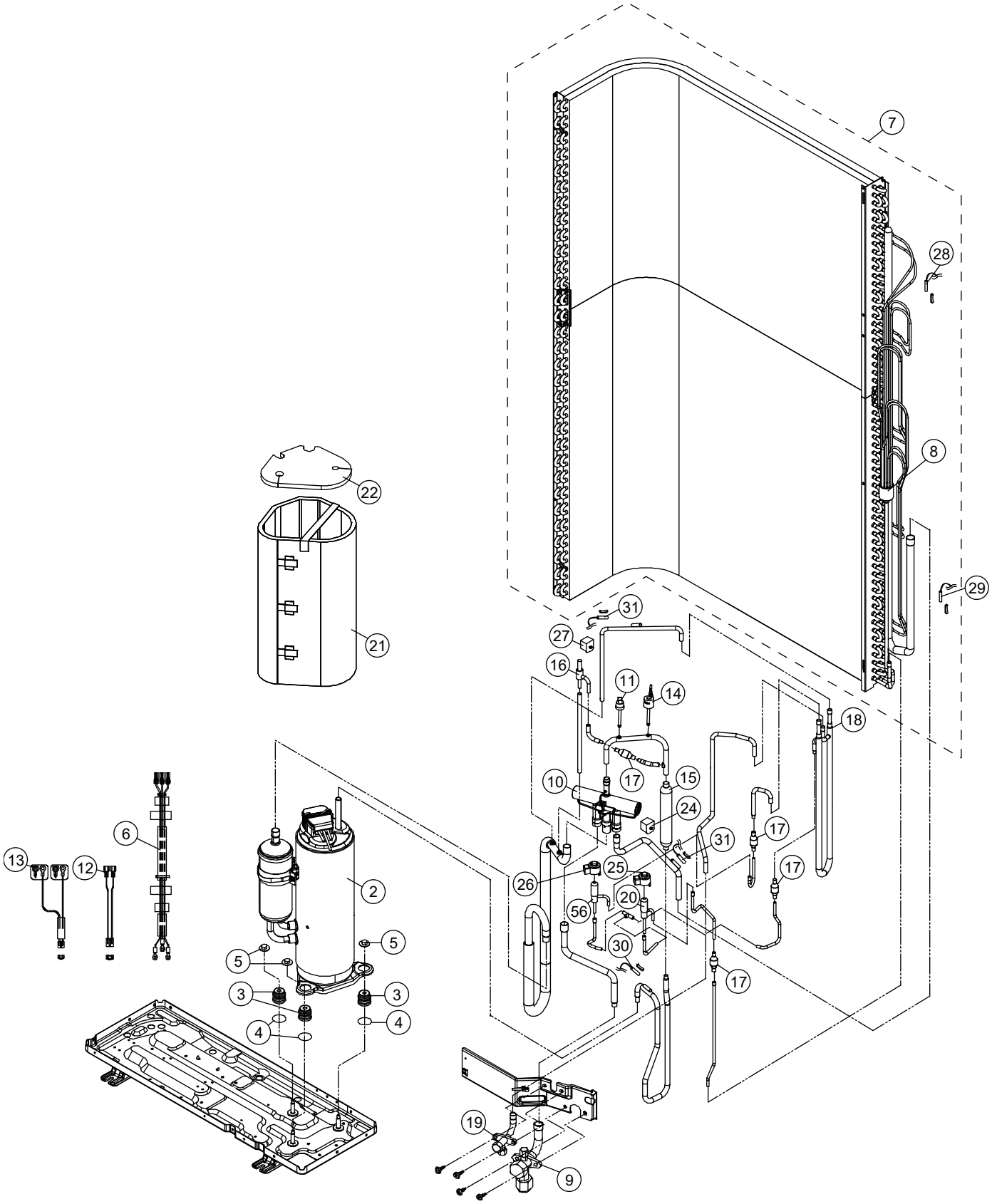

Note:
The above exploded view is for the purpose of parts disassembly and replacement.
The non-numbered parts are not kept as standard service parts.

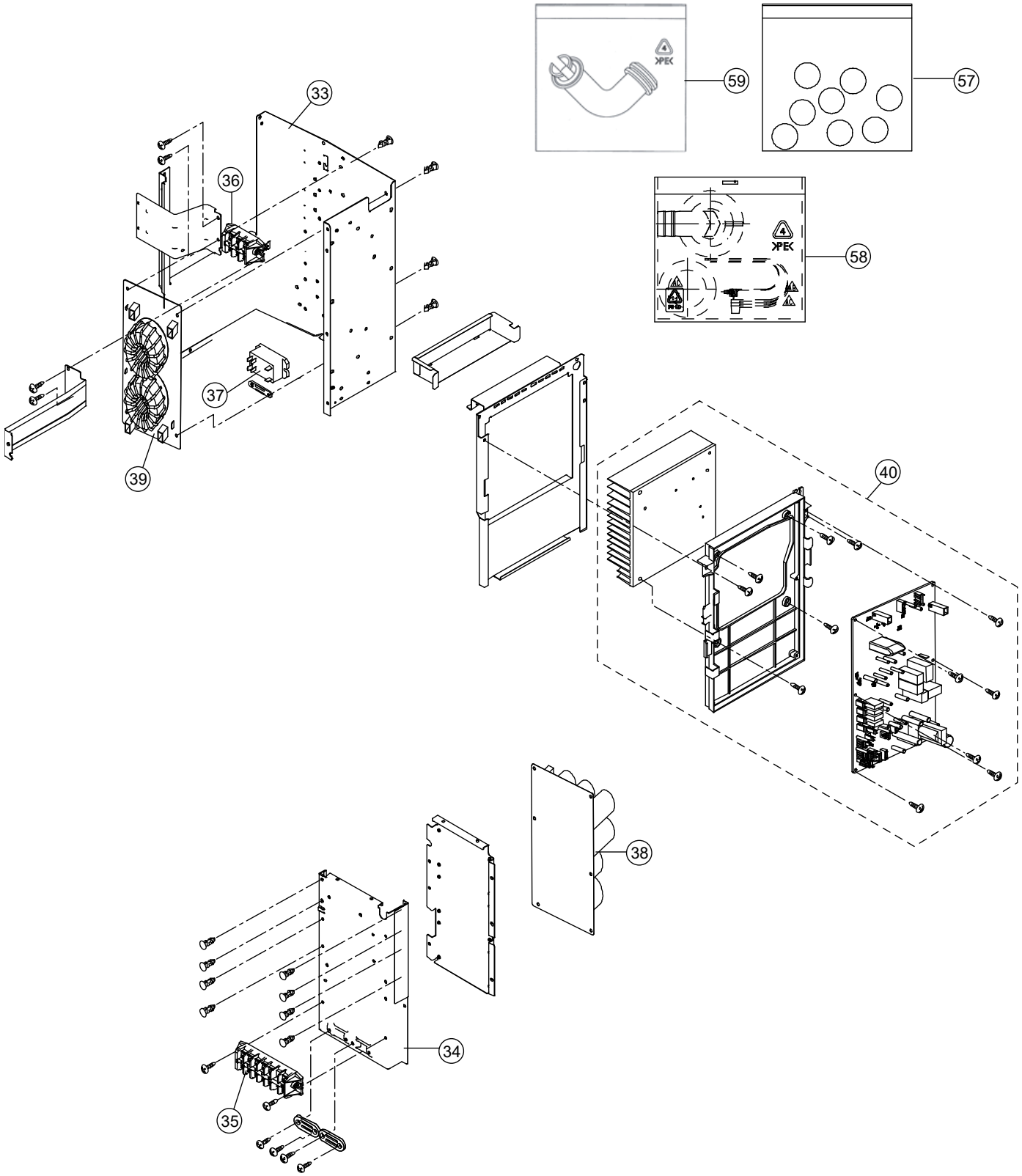

Note:
The above exploded view is for the purpose of parts disassembly and replacement.
The non-numbered parts are not kept as standard service parts.

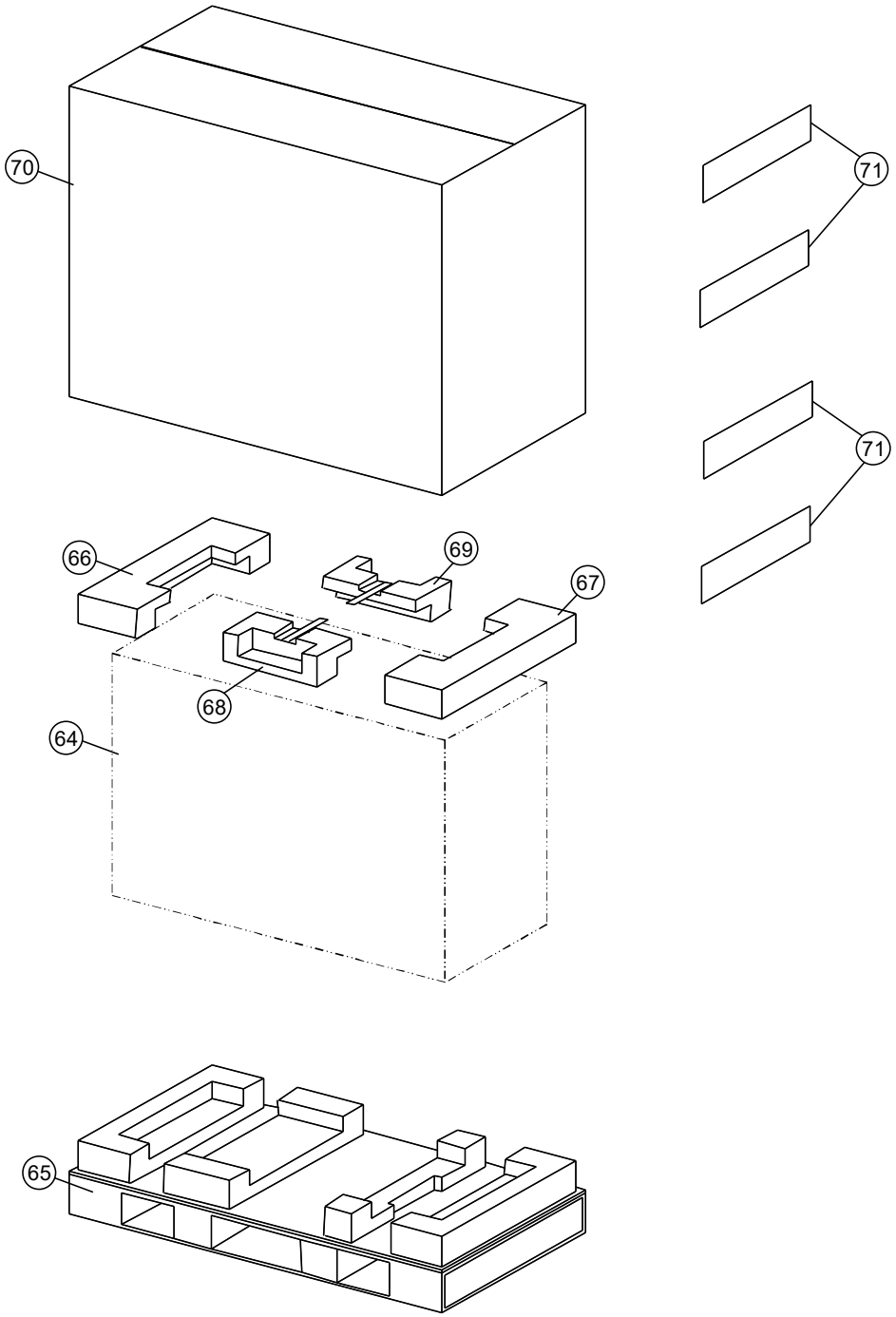

Note:
The above exploded view is for the purpose of parts disassembly and replacement.
The non-numbered parts are not kept as standard service parts.

SAFETY	REF. NO.	DESCRIPTION & NAME	QTY.	WH-UXZ09KE5	WH-UXZ12KE5	REMARK
	1	BASE PAN ASS'Y	1	ACXD52K05220	←	
⚠	2	COMPRESSOR	1	9KD420XAD21	←	O
	3	BUSHING - COMPRESSOR MOUNT	3	CWH50055	←	
	4	PACKING	3	CWB811017	←	
	5	NUT - COMPRESSOR MOUNT	3	CWH561049	←	
⚠	6	LEAD WIRE - COMPRESSOR	1	ACXA60C94910	←	
	7	CONDENSER COMPLETE	1	ACXB32C26740	←	
	8	TUBE ASSY (CAP. TUBE)	1	ACXT07K10140	←	
	9	3-WAYS VALVE (GAS)	1	ACXB01-06230	←	O
	10	4-WAYS VALVE	1	ACXB00-01530	←	O
	11	PRESSURE SWITCH	1	ACXA10-00650	←	O
⚠	12	LEAD WIRE - CO. (CN-PSW1)	1	CWA67C8514	←	
⚠	13	LEAD WIRE - CO. (CN-RY1)	1	CWA67C9415	←	
	14	SENSOR	1	ACXA50-05990	←	O
	15	DISCHARGE MUFFLER	1	CWB121014	←	
	16	2-WAYS VALVE	1	CWB021637	←	
	17	STRAINER	4	CWB111032	←	
	18	TUBE HEAT EXCHANGER	1	CWB361003	←	
	19	2-WAYS VALVE	1	ACXB02-04010	←	
	20	EXPANSION VALVE	1	CWB051091	←	
	21	SOUND PROOF MATERIAL	1	ACXG30-13540	←	
	22	SOUND PROOF MATERIAL	1	ACXG30-13550	←	
	23	SOUND PROOF BOARD	1	CWH151085	←	O
⚠	24	V-COIL COMPLETE (CN-HOT)	1	CWA43C2169J	←	O
⚠	25	V-COIL COMPLETE (CN-EV)	1	ACXA43C06900	←	O
⚠	26	V-COIL COMPLETE (CN-EV2)	1	CWA43C2335	←	O
⚠	27	V-COIL COMPLETE (CN-V1)	1	CWA43C2607	←	O
⚠	28	SENSOR - COMPLETE (CN-TH1)	1	ACXA50C18980	←	O
⚠	29	SENSOR - COMPLETE (CN-TH2)	1	ACXA50C19270	←	O
⚠	30	SENSOR - COMPLETE (CN-DIS)	1	CWA50C2576	←	O
⚠	31	SENSOR - COMPLETE (CN-TH3)	1	CWA50C2807	←	O
	32	CABINET REAR PLATE - COMPLETE	1	ACXE02C01730	←	
	33	CONTROL BOARD CASING	1	ACXH10K02950	←	
	34	BOX SHAPED PLATE	1	CWD661249	←	
⚠	35	TERMINAL BOARD ASS'Y	1	CWA28K1213	←	O
⚠	36	TERMINAL BOARD ASS'Y	1	CWA28K1260	←	O
⚠	37	MAGNET RELAYS	1	K6C1AYY00003	←	O
⚠	38	ELECTRONIC CONTROLLER - CAPACITOR	1	ACXA73-48390	←	O
⚠	39	ELECTRONIC CONTROLLER - NF	1	ACXA73-48400	←	O
⚠	40	ELECTRONIC CONTROLLER (MAIN)	1	ACXA73C94450R	ACXA73C94460R	O
⚠	41	REACTOR	1	G0C592J00006	←	O
	42	PARTICULAR PLATE - A'SSY	1	CWD90K1023	←	
	43	FAN MOTOR BRACKET	1	ACXD54K02560	←	

SAFETY	REF. NO.	DESCRIPTION & NAME	QTY.	WH-UXZ09KE5	WH-UXZ12KE5	REMARK
	44	SCREW - FAN MOTOR BRACKET	2	CWH551040J	←	
⚠	45	FAN MOTOR (UPPER)	1	L6CBYYYL0362	←	O
⚠	46	FAN MOTOR (LOWER)	1	L6CBYYYL0363	←	O
	47	SCREW - FAN MOTOR MOUNT	8	CWH551323	←	
	48	PROPELLER FAN ASSY	2	CWH00K1006	←	
	49	NUT	2	CWH561092	←	
	50	CABINET FRONT PLATE	1	CWE061098G	←	
	51	DISCHARGE GRILLE	2	CWE201154G	←	
	52	SCREW	8	ACXH55-07740	←	
	53	CABINET SIDE PLATE ASSY	1	CWE04K1023G	←	
	54	CABINET TOP PLATE - COMPLETE	1	ACXE03C02300	←	
	55	HANDLE	2	CWE161008G	←	
	56	EXPANSION VALVE	1	CWB051029	←	O
	57	ACCESSORY - COMPLETE	1	ACXH82C03550	←	
	58	ACCESSORY - COMPLETE	1	ACXH82C26600	←	
	59	ACCESSORY CO. (DRAIN ELBOW)	1	ACXH82C21740	←	
	60	L-SHAPED PLATE	1	CWD601074G	←	
	61	L-SHAPED PLATE	1	CWD601075G	←	
	62	CABINET FRONT PLATE - COMPLETE	1	ACXE06C04710	←	
	63	PANASONIC BADGE	1	ACXE37-19200	←	
	64	BAG	1	ACXG86-05850	←	
	65	BASE BOARD - COMPLETE	1	ACXG62C02550	←	
	66	SHOCK ABSORBER	1	ACXG70-13690A	←	
	67	SHOCK ABSORBER	1	ACXG70-13700A	←	
	68	SHOCK ABSORBER	1	ACXG70-13710A	←	
	69	SHOCK ABSORBER	1	ACXG70-13720A	←	
	70	C.C. CASE	1	ACXG50-58522	←	
	71	MODEL LABEL	2	ACXF85-99830	ACXF85-99840	

Note:

- All parts are supplied from PAPAMY, Malaysia (Vendor Code: 00029488).
- “O” marked parts are recommended to be kept in stock.

[PAPAMY] Printed in Malaysia
SB0224-2